US 20020067972A1

(19) United States

(12) Patent Application Publication (10) Pub. No.: US 2002/0067972 A1

Chou (43) Pub. Date: Jun. 6, 2002

(54) SECURING NET

(76) Inventor: An-Chuan Chou, Tainan (TW)

Correspondence Address:
ROSENBERG, KLEIN & LEE
3458 ELLICOTT CENTER DRIVE-SUITE 101
ELLICOTT CITY, MD 21043 (US)

(21) Appl. No.: 09/729,745

(22) Filed: Dec. 6, 2000

Publication Classification

(51) Int. Cl.[7] B61D 45/00

(52) U.S. Cl. 410/97

(57) ABSTRACT

A securing net for luggage has a fine net, a main net and hooking elements. The fine net is disposed in the middle. The main net is made of a rope having a first part arranged to from several spaced apart shaped loops each having an inner end portion connected to an outer part of the fine net; the rope having a second part arranged across intermediate portions of the shaped loops, approaching the fine net with fixing elements coupled to intersections of the rope. The hooking elements are coupled to an outer part of the main net for connecting the securing net to a luggage rack. The securing net can secure small objects on the luggage rack of a station wagon by means of the fine net.

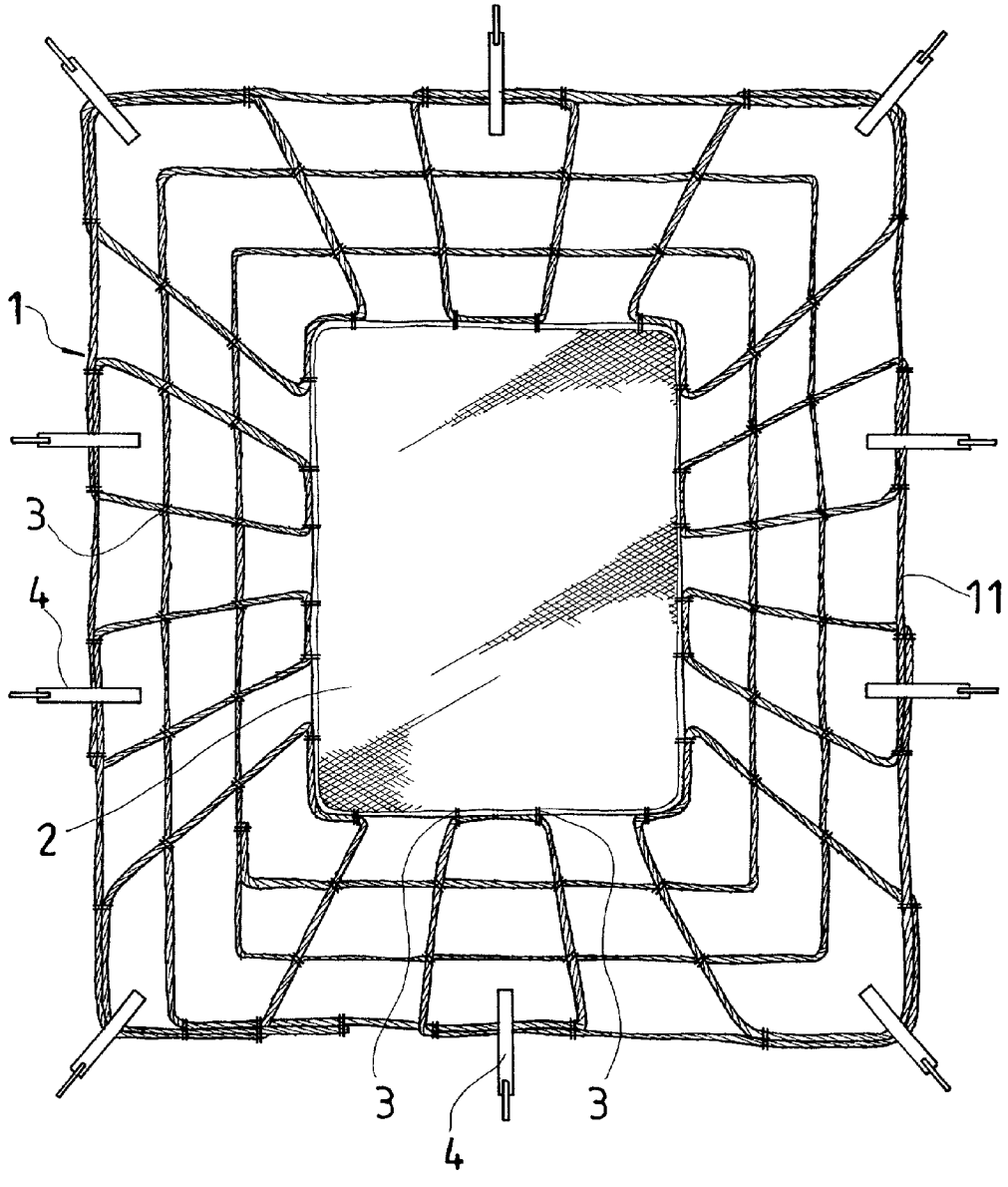

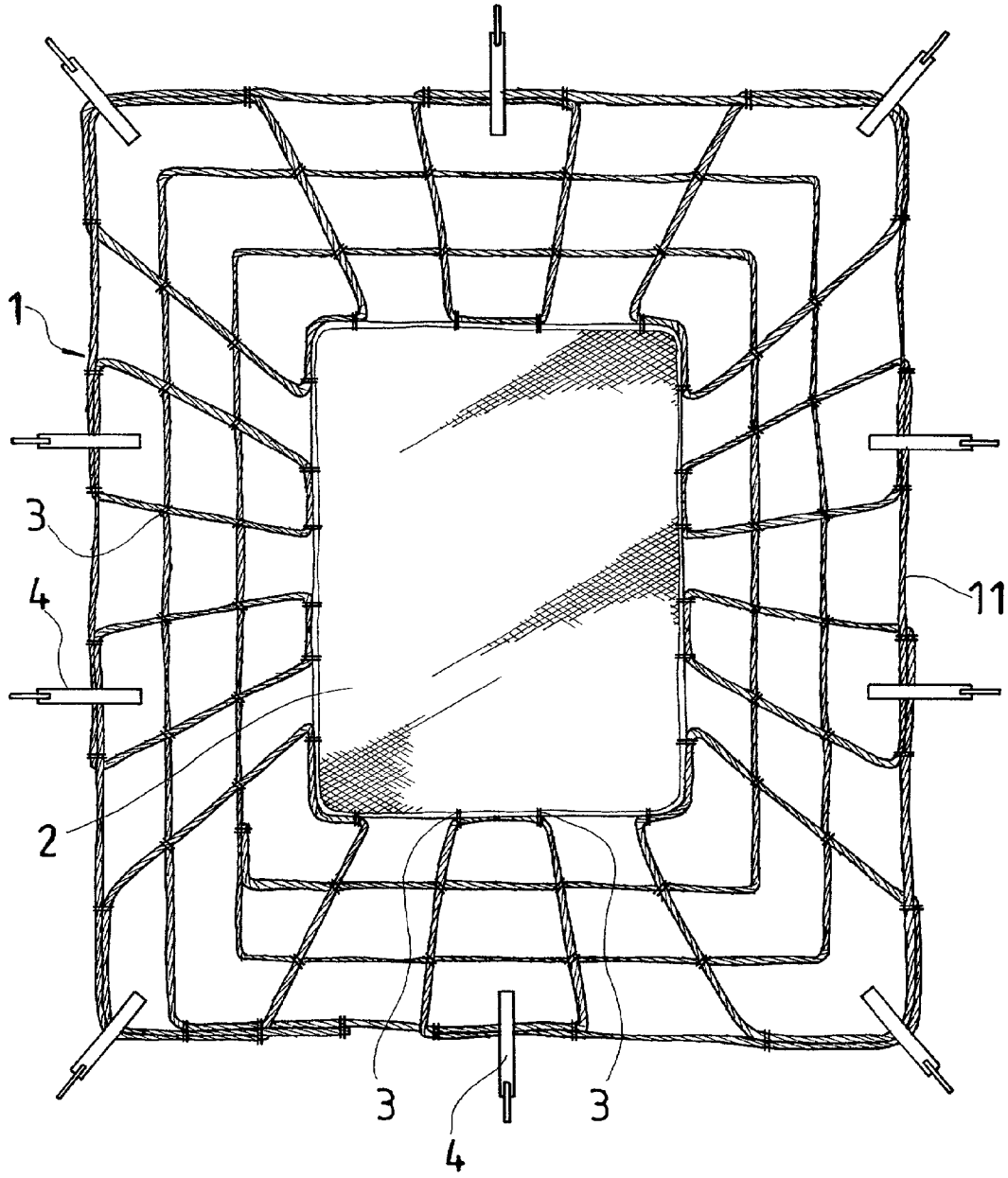

FIG. 1

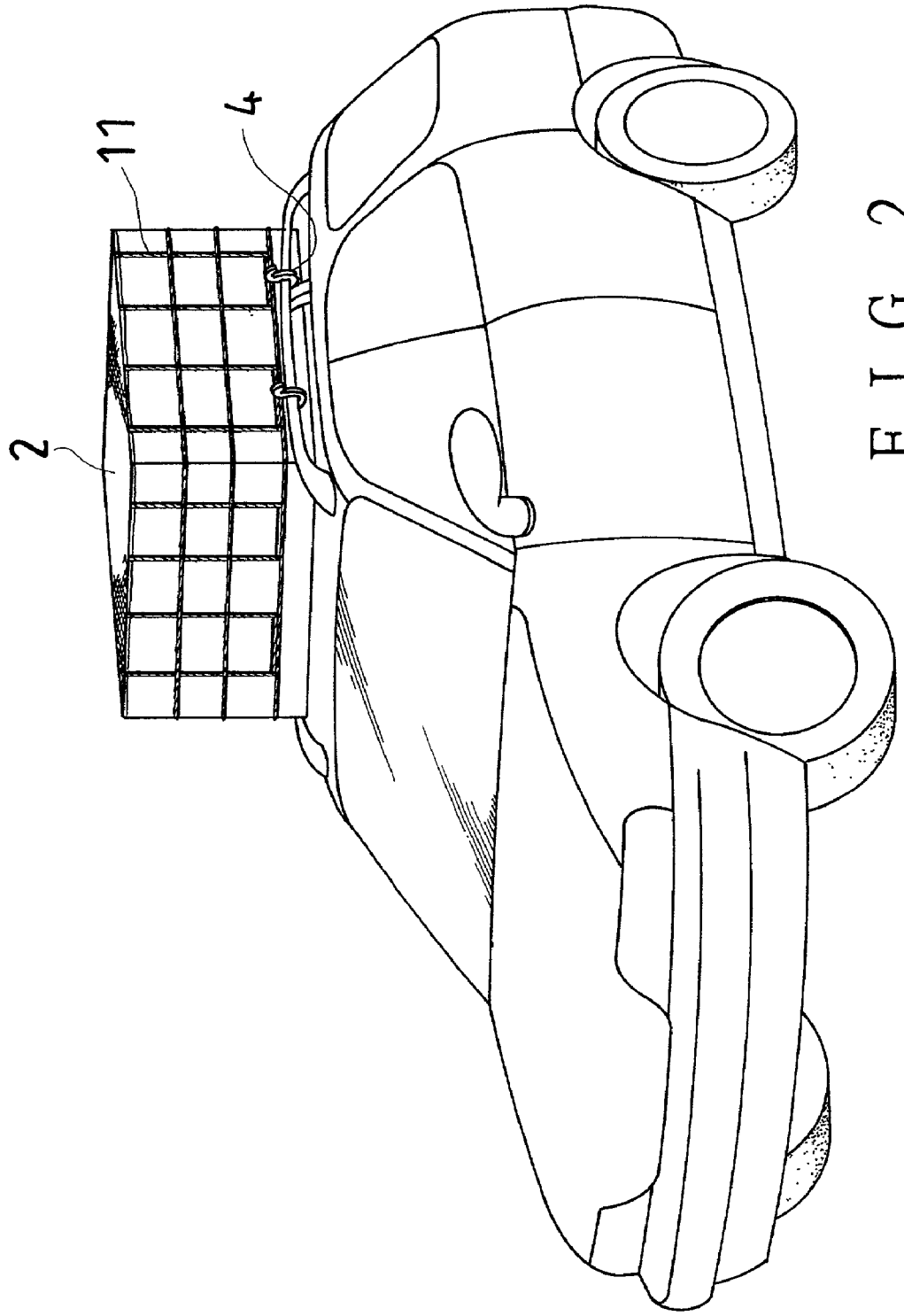

FIG. 2

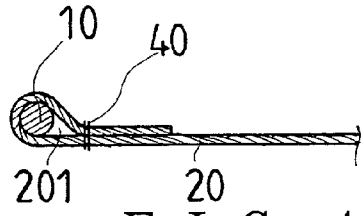

FIG. 4
(PRIOR ART)

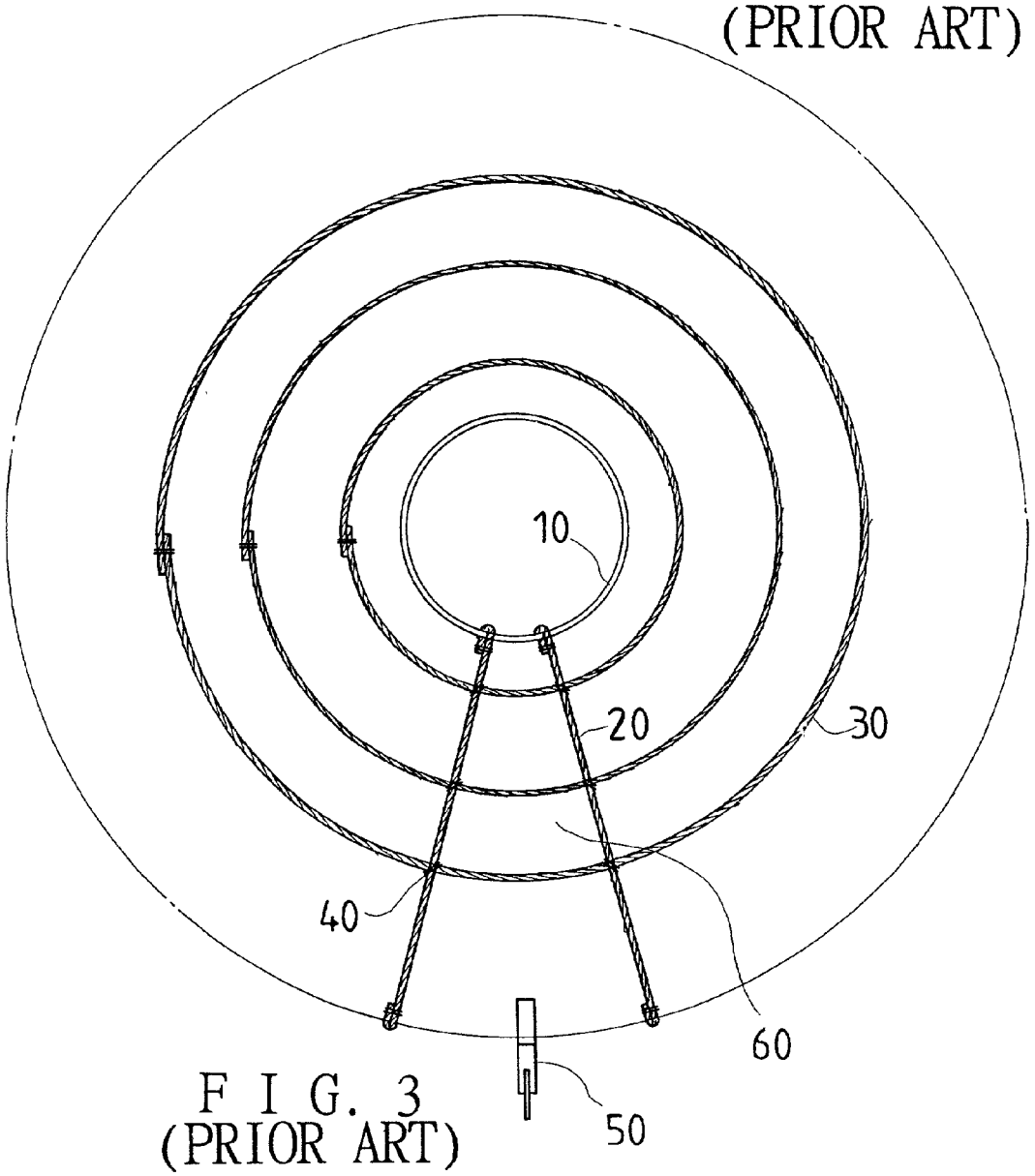

FIG. 3
(PRIOR ART)

SECURING NET

BACKGROUND OF THE INVENTION

[0001] The present invention relates to a securing net for luggage, and particularly to one which is used to secure luggage to the luggage rack on the top of a station wagon, jeep, etc.

[0002] Station wagons and jeeps can carry luggage on the luggage rack on the top, and nets are used to secure the luggage to the rack; thus, the station wagons and the jeeps can carry more luggage.

[0003] Referring to **FIG. 3, a** conventional securing net for luggage has a central ring, several transverse ropes **30**, several longitudinal ropes **20**, fixing elements **40** and hooking elements **50**.

[0004] The transverse ropes **30** are disposed around the central ring **10**, each forming a circle; two ends of each of the transverse ropes **30** are connected to each other with the fixing elements **40**.

[0005] The longitudinal ropes **20** are radially spaced apart, and each connected to the central ring **10** from an inner end portion, and connected to an outermost one of the transverse ropes **30** from an outer end portion with the fixing elements **40**; referring to **FIG. 4**, the inner end portions of the longitudinal ropes **20** each forms a loop **201** around the central ring, and is connected to a respective fixing element **40**.

[0006] The hooking elements **50** are coupled to the outermost transverse ropes **30** for permitting the net to be connected to a luggage rack of a station wagon. Thus, the securing net can be fastened to the luggage rack by the hooking elements **50** to secure the luggage on the rack.

[0007] However, because the central ring **10** has a central space, small objects, which are usually placed on the upper portion of the luggage are likely to fall off the rack from the central space of the central ring **10**.

SUMMARY OF THE INVENTION

[0008] Therefore, it is a main object of the present invention to provide a securing net for luggage which can secure small objects placed on the upper portion of the luggage.

[0009] The securing net for luggage of the present invention includes a fine net, a main net and hooking elements.

[0010] The fine net is disposed in a middle portion of the securing net. The main net is made of a rope, the rope having a first part arranged to form several spaced apart shaped loops each having an inner end portion connected to the outer part of the fine net; the rope having a second part arranged across intermediate portions of the shaped loops, approaching the fine net with fixing elements coupled to intersections of the rope.

[0011] Thus, the securing net can secure small objects on the luggage rack by means of the fine net, preventing the small objects from falling off the rack.

BRIEF DESCRIPTION OF THE DRAWINGS

[0012] This invention will be better understood by referring to the accompanying drawings, wherein:

[0013] **FIG. 1** is a view of the securing net for luggage according to the present invention.

[0014] **FIG. 2** is a view showing the securing net of the present invention being used on a luggage rack.

[0015] **FIG. 3** is a view of the conventional securing net in the Background.

[0016] **FIG. 4** is a fragmentary cross-sectional view of the conventional securing net.

DESCRIPTION OF THE PREFERRED EMBODIMENTS

[0017] Referring to **FIG. 1, a** securing net for luggage of the present invention includes a main net **1**, a fine net **2** and hooking elements **4**.

[0018] The fine net **2** has small meshes, and is disposed in the middle portion.

[0019] The main net **1** is made of a rope **11** of which a first part is arranged to form several spaced apart shaped loops each having an inner end portion connected to an outer portion of the fine net **2**; fixing elements are used to connect the inner end portions of the shaped loops to the fine net **2**. A second part of the rope **11** is arranged across intermediate portions of the shaped loops, approaching the fine net **2**. Fixing elements **3** are used to fasten the intersections of the rope **11**.

[0020] The hooking elements **4** are coupled to an outer portion of the main net **1** for permitting the securing net to be connected to a luggage rack of a station wagon. Thus, the securing net can be fastened to the luggage rack by the hooking elements **4** to secure the luggage on the rack.

[0021] From the above description, the securing net of the present invention can be known to be able to secure small objects on the upper part of the luggage, preventing the small objects from falling off the luggage rack.

[0022] In a second embodiment of the present invention, the fine net is circular, and is used to replace the central ring **10** of the conventional securing net in the Background for permitting the conventional net to secure small objects on the luggage rack.

What is claimed is:

1. A securing net for luggage, comprising

a fine net, said fine net being disposed in a middle portion of said securing net;

a main net, said main net being connected to an outer part of said fine net; and,

a plurality of hooking elements coupled to an outer part of said main net for connecting said securing net to a luggage rack.

2. The securing net for luggage as claimed in claim 1, wherein said main net includes a rope, said rope having a first part arranged to form a plurality of spaced apart shaped loops each having an inner end portion connected to said outer part of said fine net; said rope having a second part

arranged across intermediate portions of said shaped loops, approaching said fine net with fixing elements coupled to intersections of said rope.

3. The securing net for luggage as claimed in claim 1, wherein said main net includes a plurality of transverse ropes, and longitudinal ropes; said transverse ropes being disposed around said fine net each forming a circle; said longitudinal ropes radially crossing said transverse ropes, and being connected to said transverse ropes, and said outer part of said fine net by means of fixing elements.

* * * * *