April 29, 1930. W. H. SMITH 1,756,392

ZIGZAG PILE FORMING MACHINE

Filed Feb. 23, 1929 5 Sheets-Sheet 1

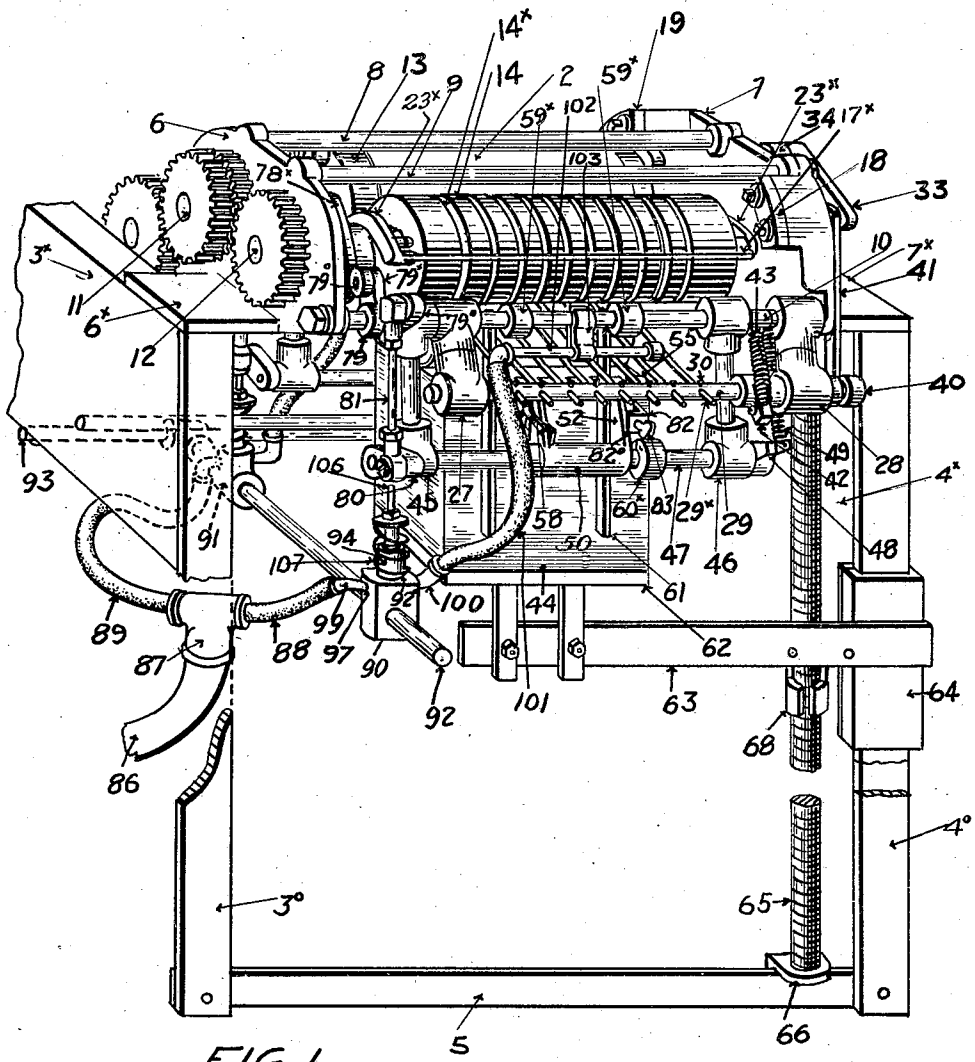

FIG. 1.

INVENTOR
W. H. SMITH.
BY Fetherstonhaugh & Co
ATTORNEYS.

April 29, 1930. W. H. SMITH 1,756,392

ZIGZAG PILE FORMING MACHINE

Filed Feb. 23, 1929 5 Sheets-Sheet 2

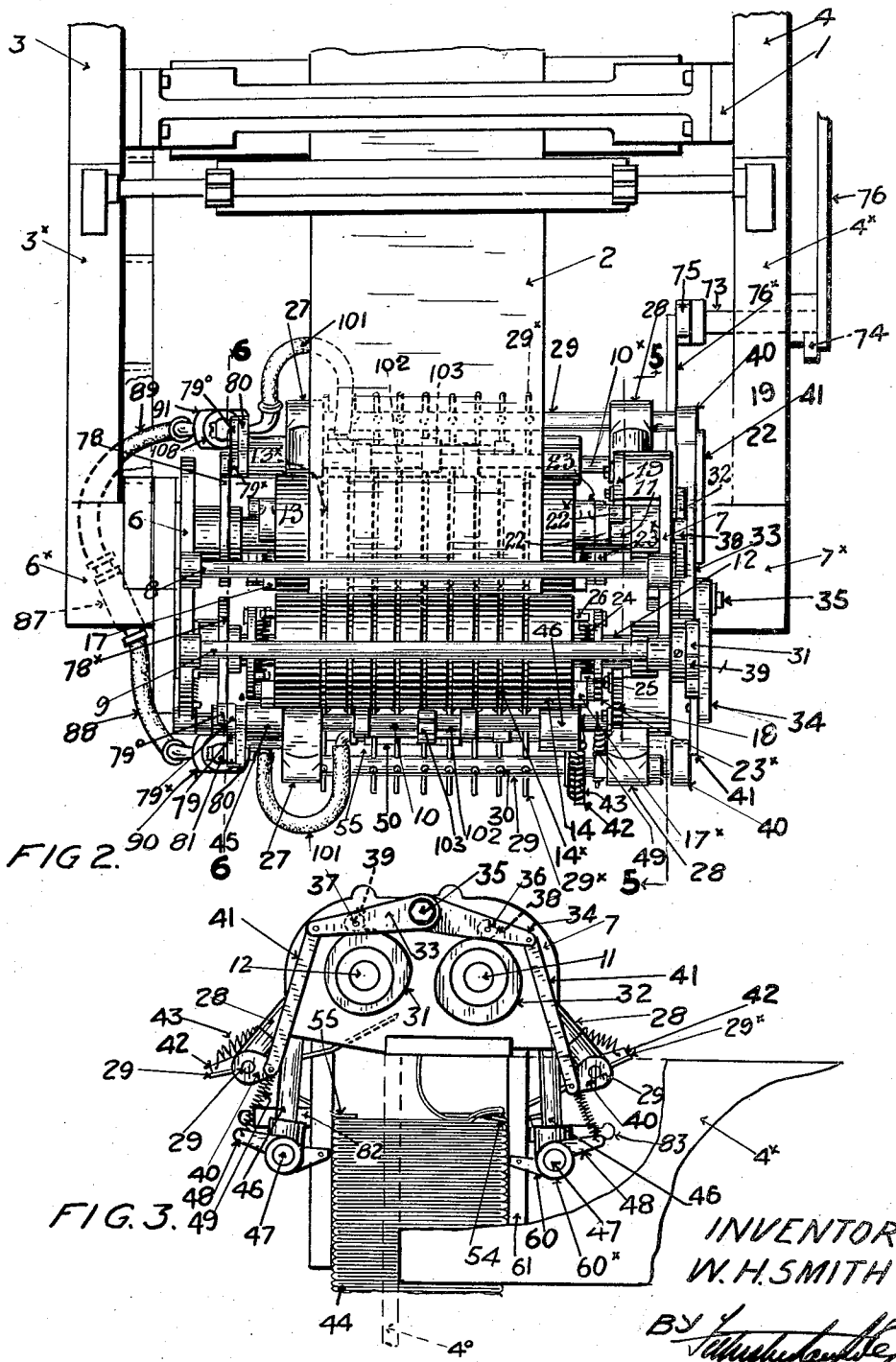

FIG 2.

FIG. 3.

INVENTOR
W. H. SMITH
BY
ATTORNEYS.

April 29, 1930. W. H. SMITH 1,756,392

ZIGZAG PILE FORMING MACHINE

Filed Feb. 23, 1929 5 Sheets-Sheet 3

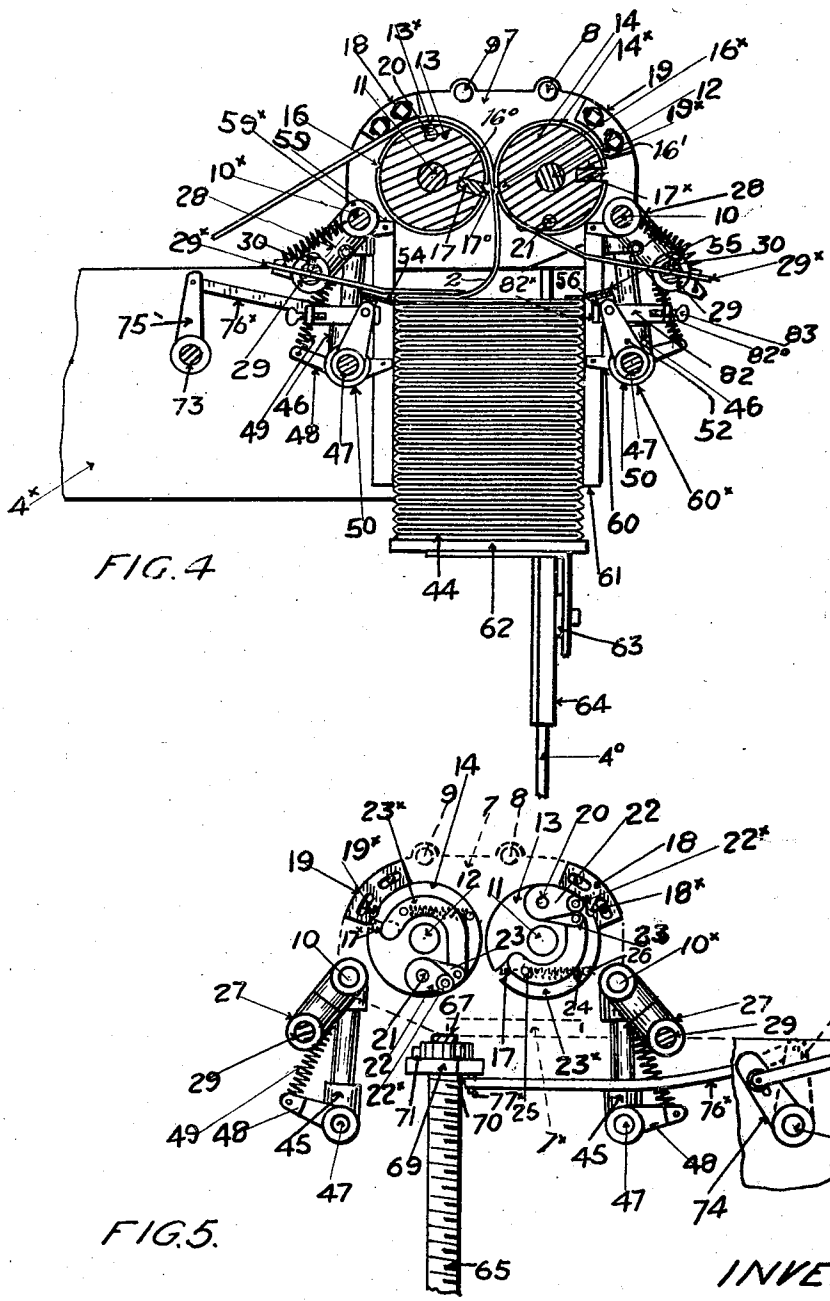

FIG. 4

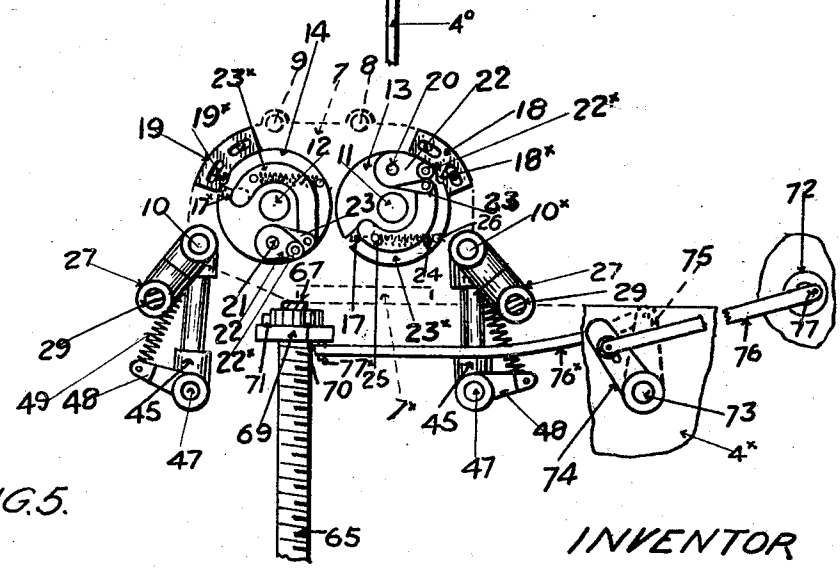

FIG. 5.

INVENTOR
W. H. SMITH.
BY [signature]
ATTORNEYS.

April 29, 1930. W. H. SMITH 1,756,392

ZIGZAG PILE FORMING MACHINE

Filed Feb. 23, 1929 5 Sheets-Sheet 4

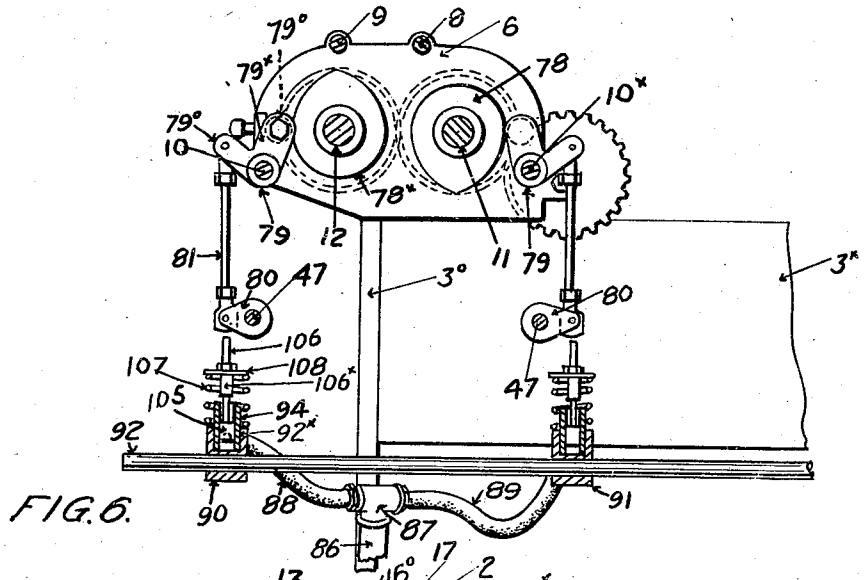

FIG. 6.

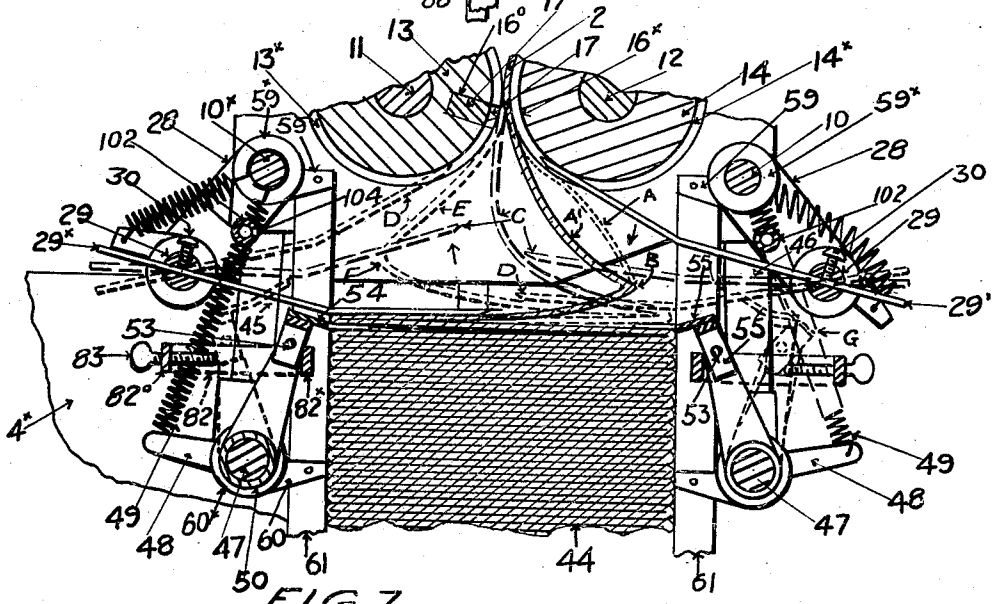

FIG. 7.

INVENTOR
W. H. SMITH.

BY Whittemore, Hulbert & Belknap

ATTORNEYS

April 29, 1930. W. H. SMITH 1,756,392

ZIGZAG PILE FORMING MACHINE

Filed Feb. 23, 1929 5 Sheets-Sheet 5

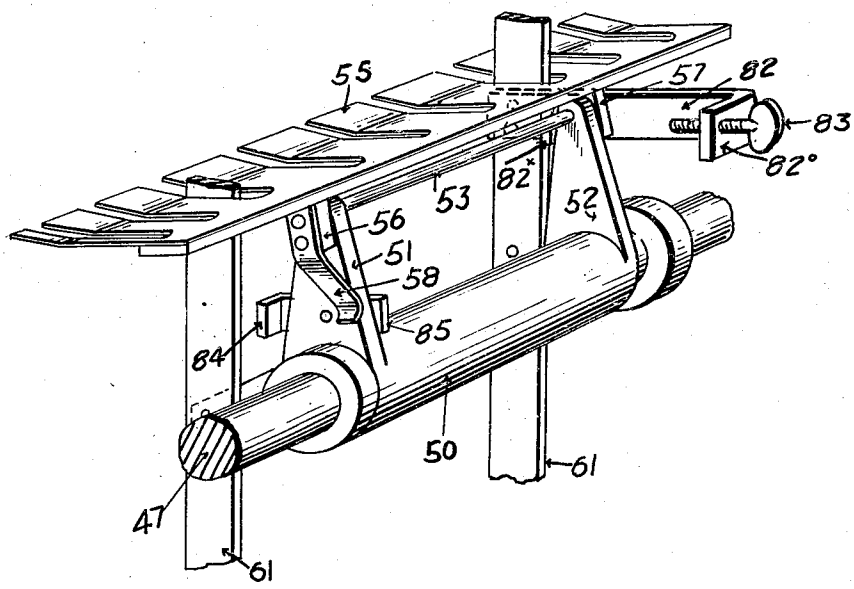

FIG. 8.

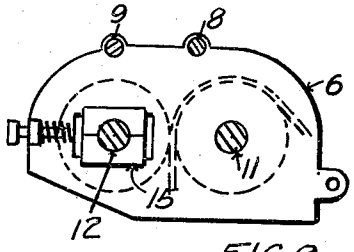

FIG. 9.

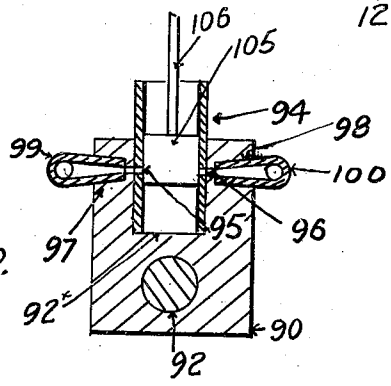

FIG. 10.

INVENTOR
W. H. SMITH.
BY
ATTORNEYS

Patented Apr. 29, 1930 1,756,392

UNITED STATES PATENT OFFICE

WALTER HAROLD SMITH, OF TORONTO, ONTARIO, CANADA, ASSIGNOR TO BUSINESS SYSTEMS LIMITED, OF TORONTO, CANADA, A CORPORATION OF CANADA

ZIGZAG-PILE-FORMING MACHINE

Application filed February 23, 1929. Serial No. 342,255.

My invention relates to improvements in zigzag pile forming machines, and the object of the invention is to devise a machine which will rapidly form a paper strip hereinafter referred to as the web into a zigzag pile, at the same time accurately spacing the crease lines apart to produce folds of exactly equal length so that an accurately vertical pile is built up, and simultaneously press each fold together as it is formed to finish such fold, and thereby dispense with any manual finishing after the pile is formed, the operation of the device resulting in a completely finished pile ready for use, and it consists essentially of the arrangement and construction of parts as hereinafter more particularly explained.

Fig. 1 is a perspective view of my zigzag pile forming machine.

Fig. 2 is a plan view of the machine shown in Fig. 1 and showing the connection to the printing device from which the web is drawn.

Fig. 3 is an end view of the pile forming mechanism, part of the frame being broken away to exhibit the construction thereof.

Fig. 4 is a sectional view through the centre of the pile forming machine and looking from the opposite side to that shown in Fig. 3.

Fig. 5 is a sectional view through the device taken between the right hand end plate and the feed rolls, the end plate being illustrated by dotted lines, the section being taken on line 5—5 Fig. 2.

Fig. 6 is a sectional view on line 6—6 Fig. 2.

Fig. 7 is an enlarged sectional detail through the feed rolls, zigzag pile and adjacent mechanism.

Fig. 8 is an enlarged perspective detail of the pressure plate and operative parts coacting therewith.

Fig. 9 is a detail view showing the bearing supports for the shafts of the combination feed and creasing rolls.

Fig. 10 is a detail view through one of the air supply valves taken at right angles to the section shown in Fig. 6.

In the drawings like characters of reference indicate corresponding parts in each figure.

1 indicates a portion of a printing machine through which the paper web 2 is passed for the purpose of printing the necessary details thereon. 3 and 4 are the side bars of the frame of the printing machine which are extended rearwardly as indicated at 3^{x} and 4^{x} to form a support for my device, the extreme ends of the side bars being carried by legs 3^{0} and 4^{0} connected together at the bottom by a cross bar 5. 6 and 7 are the side standard plates of my device provided with feet 6^{x} and 7^{x} carried upon the side bar extensions 3^{x} and 4^{x}. The standard plates 6 and 7 are connected together by tie rods 8 and 9. 10 and 10^{x} are supporting rods extending between the front and rear portions of the standard plates 6 and 7. 11 and 12 are shafts journalled in the standard plates 6 and 7 and to which are secured the combination feed and creasing rollers 13 and 14. The shaft 11 is held in a stationary bearing in the standard plates 6 and 7 and the shaft 12 in spring pressed bearings 15, whereby the feed roller 14 is resiliently forced towards the feed roll 13 so as to have a feeding grip upon the web 2 which passes downward therebetween. The feed rollers 13 and 14 are provided with a series of annular grooves 13^{x} and 14^{x} for a purpose which will hereinafter appear.

The feed rollers 13 and 14 are provided on one side with V-shaped grooves 16 and 16^{x} and with recesses 16^{0} and 16^{1}, the recesses 16^{0} and 16^{1} being diametrically opposite the grooves 16 and 16^{x}. Both the grooves and recesses extend longitudinally of the periphery of the rollers from end to end.

17 and 17^{x} are bars slidably fitting within the recesses 16^{0} and 16^{1} so as to reciprocate a short distance radially. The outer exposed face of each bar 17 and 17^{x} is provided with a V-shaped rib 17^{0} extending longitudinally thereof, the rib of each bar being adapted to enter the V-shaped groove 16 or 16^{x} as the rollers revolve.

Normally the edge of the V-shaped rib 17^{0} is within the periphery of the roller and when moved outward extends slightly beyond such periphery to enter the opposing groove 16 or 16^{x} for an instant as the rollers revolve so as to pinch the web 2 into the V-shaped recess to form a transverse crease across the web, such operation being performed just as

the V-shaped groove straddles the line of grip on the web of the rollers 13 and 14.

It will be understood that as the feed rollers 13 and 14 revolve they draw the web 2 from the printing device, such draw tending to stretch the paper. It is, therefore, important that the crease line be formed at the line of grip so that in the act of forcing the paper into the groove it will not exert any extra stretch on the web between the feed rollers and the printing machine, the extra paper required to permit the forming of the crease being taken from the slack existing in the paper below the line of grip and not from the paper under tension above the line of grip. By this means no further stretch is given to the paper varying in amount according to the stretchability of the paper and therefore the distance between the crease lines is not affected by any variation of stretch in the paper, and thus insuring of each ply of the pile being exactly the same length to form a vertical pile as will hereinafter more clearly appear.

It will be readily understood that if the length of the plies varied each ply would slightly overhang the underlying ply at the line of fold carrying the corresponding pile face out of the vertical or to an inclined position.

In order to operate the bars 17 and 17^{x} to crease the paper I provide the following device.

18 and 19 are a pair of cam plates secured to the standard plate 7. The inner edges of the plates 18 and 19 are curved concentric to the periphery of the rollers 13 and 14 and are provided on their inner edges with small projections 18^{x} and 19^{x}.

20 and 21 are rocking shafts which extend through the rollers 13 and 14 so as to be journalled therein. 22 and 23 are the arms of a double lever secured to one end of each shaft 20 and 21. The arm 22 is provided with a roller 22^{x} adapted to engage with the inner edge of the plates 18 or 19 as the roller 13 or 14 revolves. Each of the other arms 23 is connected by a curved link 23^{x} to the corresponding end of the bar 17 or 17^{x}, the link 23^{x} being resiliently held by a tension spring 24 connected at one end to a pin 25 carried by the link 23^{x}, and at the opposite end by a pin 26 extending from the roller 13 or 14.

It will, of course, be understood that the opposite end of each shaft 20 and 21 is provided with a lever arm corresponding to the lever arm 23 connected by a link corresponding to the link 23^{x} to the opposite end of the bars 17 and 17^{x}.

It will thus be seen that as the feed rollers 13 and 14 revolve the rollers 22^{x} are carried into engagement with the projection 18^{x} or 19^{x} so as to rock the rod 20 or 21, thereby swinging the lever arm 23 of each shaft 20 and 21 in a corresponding direction forcing the bar 17 or 17^{x} very slightly outward, such operation being so timed that the corresponding groove 16 is brought into an opposing position to the rib 17^{0} to enter it and pinch the interposed paper into a crease line.

27 and 28 are hangers carried by each rod 10 and 10^{x}. 29 is a rocking rod journalled in the lower end of each pair of hangers 27 and 28. 29^{x} are stripper fingers extending at one end through the rocking rods 29 and secured therein by set screws 30.

The fingers 29^{x} are so formed that when the rocking rods 29 are rocked so that their inner end portions travel upward they are carried into the grooves 13^{x} and 14^{x} of the rollers 13 and 14.

The rocking action of the rocking shafts 29 alternate one with the other so that the stripper fingers are alternately carried into this position. When the stripper fingers are carried into this position they insure of the web being freed from the rollers so as to travel downward to form the pile.

I will now describe the mechanism by which the rocking rods 29 are alternately rocked.

31 and 32 are cams secured to the shafts 11 and 12 of the feed rollers 13 and 14. 33 and 34 are cam levers pivoted on a stud 35 extending from the standard plate 6. 36 and 37 are pins extended from the inner face of the levers 33 and 34 intermediately of their length and upon which are mounted cam rollers 38 and 39 which rest upon the periphery of the cams 31 and 32. 40 is an arm secured to the end of each rocking rod 29, such arms being connected by links 41 to the corresponding ends of the levers 33 and 34.

As the cams 31 and 32 are oppositely set it will be readily seen that as they revolve they alternately raise and lower the cam levers 33 and 34, pulling alternately upon the links 41 to alternately raise the arms 40 and thereby alternately rock the shafts 29, carrying the stripper fingers 29^{x} alternately into engagement with the feed rollers 13 and 14 to strip the paper therefrom. In order that this mechanism is returned to its normal position after each operation each shaft 29 is provided with an outwardly extending arm 42 connected by a tension spring 43 to the rod 10 or any other suitable point of connection.

Upon referring to Fig. 7 it will be clearly seen that as the web 2 travels downward from between the feed rollers 13 and 14 it tends to fold upon the transverse crease lines so as to fall alternately in opposite directions from one side to the other of the pile 44.

45 and 46 are hangers also carried by the rod 10. 47 is a rocking rod journalled in the lower and of each pair of hangers 45 and 46. One end of each rocking rod 47 is provided with an arm 48 connected by a tension spring 49 to any suitable point of attachment such as the shaft 10. 50 is a sleeve secured to each

rocking shaft 47, each sleeve being provided with arms 51 and 52. 53 is a rocking rod journalled in the upper end of each pair of arms 51 and 52 54 and 55 are pressure plates adapted to exert pressure on the edge of the pile over each fold Each pressure plate is provided with a pair of depending arms 56 and 57 secured to the end of the corresponding rocking rod 53. 58 is a leaf spring secured to the arm 56 and adapted to frictionally bear at its free end against the outer face of the arm 51. 59 are arms forming part of sleeves 59× secured to the rods 10 and 10×, and arm 59 being located in proximity to each side of the pile. 60 is an arm forming part of a sleeve 60× carried by the rocking shaft 47. 61 are front and rear vertical guide bars between which the pile 44 is built up. 62 is a pile supporting table supported on an arm 63 carried by a slide 64 slidably mounted on a depending leg 4°. 65 is a feed screw mounted in bearings 66 and 67. 68 is a divided nut, the members of which are held by gravity in engagement with the thread of the feed screw 65. 69 is a pawl carrier rotatably mounted on the upper end of the feed screw 65, and 70 is a ratchet secured to the feed screw and with which the pawl 71 coacts to rotate the feed screw. 72 is a rotating member of the printing device 1.

73 is a rocking shaft journalled in the side bar 3× of the main frame to which arms 74 and 75 are secured. The arm 74 is connected by a link 76 to a crank pin 77 carried eccentrically by the rotating member 72. The arm 75 is connected by a link 76× to a pin 77× depending from the pawl carrier 69.

As the member 72 rotates the link 76 is reciprocated rocking the shaft 73 and swinging the arms 74 and 75 alternately in opposite directions so as to reciprocate the link 76× and thereby rock the pawl carrier 69 around its vertical axis and thereby rotate the feed screw by means of the pawl 71 and ratchet 70. By this means the nut 68 is carried downward so as to gradually feed the pile supporting table 62 downward as the pile is built up so as to maintain the upper face of the pile at a constant level.

In order to rock the shafts 47 I provide cams 78 and 78× which are oppositely set and respectively secured to the shafts 11 and 12 of the feed rollers 13 and 14.

79 is a bell crank mounted in each rod 10 and 10×. The arm 79× of each bell crank is provided with a cam roller 79° coacting with the corresponding cam 78 or 78×. 80 is an arm secured to each rocking shaft 47. The arm 80 is connected by a link 81 to the other arm 79° of each bell crank 79.

As the cams 78 and 78× revolve they alternately operate the bell crank 79 so as to alternately rock the shafts 47 and thereby swing the arms 51 and 52 alternately inward and outward at each side of the machine.

82 is a bar member carried by one of the vertical bars 61. The bar members 82 are provided with lateral projections 82× and 82°, the projection 82× preferably carrying a set screw 83. The projection 82× and the inner end of the set screw 83 are directly in the path of travel of the lower end of the arm 57 of the pressure plate 54 or 55.

As the arms 51 and 52 travel inward towards the pile the arm 57 is brought into engagement with the lateral projection 82× so that such arm is swung outward at its lower end forcing the inner edge portion of the pressure plate 54 downward against the upper face of the pile as shown in Fig. 7.

When the arms 51 and 52 are swung outward away from the pile the pressure plate 54 or 55 is held in the same relative position to the arms 51 and 52 during its outward swing, thereby meeting the folded paper forcing it towards the descending stripper fingers 29× so as to exert a slight grip on the fold and pinch it along the line of fold. The movement then carries the pressure plate clear of the pile and as the arm 57 engages the set screw 83 the inner edge of the pressure plate is tilted upward until the spring 58 engages the laterally projecting portion 84 of the bracket piece 85 carried by the arm 51 so that upon the return inward movement of the pressure plate towards the pile the pressing edge of the plate passes over the last fold made which has now become the top of the pile so that the plate in its final inward position presses down the top fold onto the pile and thereby exerting pressure upon the whole pile.

When comparatively stiff or heavy paper is being folded into a zigzag pile the paper itself will naturally fold on its crease lines alternately in opposite directions as the pile is being formed.

When, however, very light paper similar to tissue paper is used supplemental means has to be provided to insure of the paper folding alternately in opposite directions on its crease lines. To do this I provide the following device.

86 is a main air supply pipe leading to a T 87.

88 and 89 are branch pipes leading from the arms of the T. 90 and 91 are valve blocks carried upon a rod 92 supported by a cross bar 93 on the main frame of the machine. Each block 90 and 91 is provided with a downwardly extending bore 92×. 94 is a sleeve fitting in each bore 92× and is provided with diametric orifices 95 and 96. 97 and 98 are orifices formed in the valve block in align with the orifices 95 and 96. 99 and 100 are nipples secured in the orifices 97 and 98 at one end, the pipes 88 and 89 being connected to the nipples 99. 101 are pipes leading from the nipples 100. 102 are tubes supported by a bracket 103 extending from each supporting rod 10. The tubes 102 are provided with a

line of perforations 104 through which air is impelled from each side of the machine to carry the web 2 alternately from one side of the pile to the other to insure that the folds are made. 105 is a piston operating within each sleeve 94 and provided with a piston rod 106 spring pressed in its upward position by a spring 107 bearing at its lower end against the valve block 90 and at its upper end against a washer 108 secured to the piston 106. Each piston rod 106 is provided with an enlargement 106× which fits the interior of the cylinder 94 when the piston is depressed so as to form an air space for the passage of air between the perforations 97 and 98. The upper end of the piston is located directly beneath the link 81 at each side of the machine.

It will therefore be seen that each time one of the links 81 is carried downward during the operation of the machine that a piston rod 106 will be engaged thereby, and the piston 105 forced downward so as to permit the passage of air passing alternately from the pipe 88 or 89 through the valve block 90 or 91 into the sleeve 94 and out through the orifice 98 and nipple 100 through the pipe 101 to the respective perforated air tube 102.

Having described the principal parts involved in my invention I will briefly describe the operation of the same.

The paper strip or web 2 is drawn from the printing machine by means of the revolving feed rollers 13 and 14. As the web passes between the rollers the coacting ribs and grooves 17° and 16 crease the paper on alternate sides at equally spaced apart positions. As the rollers continue to revolve the web is carried downward tending to follow the dotted line position A in Fig. 7 beneath the roller 14. The stripper fingers 29× on the corresponding side of the machine at this point of the operation of the machine are in engagement with the roller 14 within the grooves 14× and the ends of the fingers serve to prevent the web clinging to the roller and it assumes the full line position shown at A^1 in this figure. As it passes downward it folds upon the crease line at B gradually assuming the dash line position C as the web continues to feed down, together with the fingers 29×. As the fingers assume this intermediate position the corresponding fingers beneath the roller 13 also assume an intermediate position travelling upward towards the roller 13. As the fold is made the fingers beneath the roller 14 finally assume the dotted line position D.

When in this position the fingers beneath the roller 13 have come into engagement with such roller and as the web continues further to feed down between the rollers 13 and 14 it is creased on the opposite side to the crease at the point B and gradually assumes the position E folding on the crease line at F beneath the raised fingers contacting with the roller 13. The fingers beneath the roller 13 then descend as previously described in connection with the fingers beneath the roller 14 to make the fold on the opposite side of the paper. During this operation the pressure plates 54 and 55 bear against the upper face of the pile over the folded edges of the web, and as each fold is made the pressure plate is withdrawn from beneath the fold and as it is withdrawn it has an upward movement against the lower face of the fold so as to pinch the fold between itself and the descending stripper fingers as they assume the position D. By the continued upward movement of the pressure plates as hereinbefore described they are carried clear of the fold and the underlying pile and as they assume their extreme outward position they are tilted upward as indicated by dotted lines G in Fig. 7 so as to insure that when the pressure plate returns it passes over and comes into bearing position upon the last fold made pressing it down upon the top of the pile and holding it in this position until the next fold is made, this operation taking place alternately on each side of the pile as one fold is laid upon the other. As the pile is made and fold is laid upon fold the pile is automatically fed downward by the feed screw 65 so that the upper face of the pile remains in a constant position in relation to the folding mechanism.

What I claim as my invention:

1. In a zigzag pile forming machine, a pair of web feeding rollers each provided on its periphery with a longitudinal groove and with a diametrically opposite longitudinal and radial recess, a bar member movable radially in each recess, a creasing rib on the outer face of each bar normally within the periphery of the feed roller, and means for automatically carrying the bar outward as the rib and corresponding opposing groove come to a meshing position as the rollers revolve, whereby the web interposed between the feed rollers is pinched into a crease.

2. In a device of the class described, a pair of web feeding rollers each provided in its periphery with a longitudinal groove and to which rollers the web passes under tension to the upper side of the groove as such groove comes to the creasing position and from which point the slack of the web depends, a bar member carried by the roller and extending longitudinally of the periphery thereof and movable radially, and a creasing rib carried by the outer face of the bar member and adapted to enter the aforesaid groove to force web slack thereinto to form a crease.

3. In a zigzag pile forming machine, a pair of web feeding rollers each provided in its periphery with a longitudinal groove and with a diametrically opposite and longitudinal recess, a bar member movable radially in each recess, a creasing rib in the outer face

of each bar member and normally within the periphery of the feeding roller, and cam operated means for carrying the bar outward as the rib and corresponding opposing groove come to meshing position as the rollers revolve, whereby the web interposed between the feed rollers is pinched into a crease.

4. In a device of the class described, a pair of web feeding rollers each provided in its periphery with a longitudinal groove and with a diametrically opposite longitudinal and radial recess, a bar member spring held in its normal position in each recess, a creasing rib in the outer face of each bar and movable within the periphery of the feed roller, and means for automatically forcing the bar momentarily outward as the rib and corresponding opposing groove come to a meshing position as the rollers revolve, whereby the web interposed between the feed rollers is pinched into a crease.

5. In a zigzag pile forming machine, a pair of web feeding rollers each provided in its periphery with a longitudinal groove and with a diametrically opposite longitudinal and radial recess, a bar member movable radially in each recess and carrying a creasing rib, a stationary cam plate adjacent each roller having a surface concentric thereto and provided with a projection extending from its concentric surface, a cam lever pivoted on each feed roller, a cam roller mounted on each lever and spring held in the path of the aforesaid projection, and means operated by the cam roller as it engages the aforesaid projection for forcing the creasing rib outward as it travels into a meshing position within the groove of the opposing roller.

6. In a zigzag pile forming machine, a pair of web feeding rollers, means for creasing the web on alternate sides at equally spaced apart positions as it passes between the feed rollers, a pile support located beneath the feed rollers, stripper fingers pivotally mounted at each side of the pile support and extending at their ends beneath the corresponding feed roller, means for alternately reciprocating the fingers on their pivot and alternately into contact with the feed rollers and upper face of the pile, and means coacting with the stripper fingers for pinching the sides of each fold together as it is laid on the pile.

7. In a zigzag pile forming machine, a pair of web feeding rollers, means for creasing the web on alternate sides at equally spaced apart positions as it passes between the feed rollers, a pile support located beneath the feed rollers, stripper fingers pivotally mounted at each side of the pile support and extending at their ends beneath the corresponding feed roller, means for alternately reciprocating the fingers on their pivot and alternately into contact with the feed rollers and upper face of the pile, means coacting with the stripper fingers for pinching the sides of each fold together as it is laid on the pile and for exerting pressure against the pile top over the folded edges, and means for withdrawing such pressure means as each fold is laid on the pile top and returning it onto the top of the new made fold.

8. In a zigzag pile forming machine, a pair of web feeding rollers, a pile support onto which the web is fed by the rollers, means for creasing the web on alternate sides so as to assume a zigzag fold to form the pile as it is fed onto the support, upper and lower rock shafts at each side of the pile support and feed rollers, means for rocking the shafts, stripper fingers carried by each upper rock shaft and coacting with their adjacent feed rollers, and pressure plates carried by the lower shafts and adapted to coact with the stripper fingers to pinch each fold together as it is formed and to independently exert pressure on the pile top over the folded edges.

9. In a zigzag pile forming machine, a pair of shafts driven from a suitable source and journalled in suitable bearings, a web feed roller secured to each shaft, a pile support onto which the web is fed, means for creasing the web on alternate sides as it is fed to the support so as to fold alternately in opposite directions on the support to form the pile, upper and lower rock shafts located at each side of the pile support and feed rollers, stripper fingers carried by the upper rock shaft coacting with the adjacent feed roller, pressure plates carried by the lower rock shaft adapted to coact with the descending stripper fingers to pinch each fold as it is made and to then bear on the top of each completed fold on the pile top, and cam operated mechanism driven from the shafts of the feeding rollers for alternately rocking the rock shafts on each side of the pile.

10. In a zigzag pile forming machine, the combination with a pile support and means for zigzagging a web strip to form a pile on the support, of a pressure device at each side of the support each comprising a pressure plate normally bearing against the upper face of a pile carried on the support, means for withdrawing the plate as each fold is made, and means for elevating the inner edge of the plate so as to pass over each new made fold as it returns to its bearing position on the upper face of the pile.

11. In a zigzag pile forming machine, the combination with a pile support and means for zigzagging a web strip to form a pile on the support, of a pressure device at each side of the support each comprising a pressure plate normally bearing against the upper face of the pile, means for withdrawing the plate as each fold is made, means for elevating the inner edge of the plate so as to pass over each new made fold as it returns to its bearing position on the upper face of the pile, and means coacting with the pres-

sure plate for pinching together each fold of the web as the plate is withdrawn.

12. In a zigzag pile forming machine, the combination with a pile support and means for zigzagging a web strip to form a pile on the support, of a pressure device at each side of the support each comprising a rock shaft journalled in suitable bearings, a pair of radial arms carried by the rock shaft, means for rocking the shaft to carry the arms outward and inward as each fold is made, a pressure plate tiltably carried between the arms, spring means resisting the tilting movement of the plate as it is swung outward, and means for tilting the plate upward at its inner edge as it is carried to the extreme outward position to pass over a new made fold on the pile top on its return movement.

13. In a zigzag pile forming machine, the combination with a pile support and means for zigzagging a web strip to form a pile on the support, of a pressure device at each side of the support each comprising a rock shaft journalled in suitable bearings, a pair of radial arms carried by the rocking shaft, means for rocking the shaft to carry the arms outward and inward as each fold is made, a rod held in the outer end of the arms, a pressure plate provided with depending arms swung upon the aforesaid rod intermediate of their length, a leaf spring secured to one arm and bearing at its free end against an arm of the rock shaft, and means coacting with the arms of the pressure plate for swinging the inner edge of the pressure plate upward when the plate is swung outward and downward when the plate is swung inward.

14. In a zigzag pile forming machine, the combination with a pile support and means for zigzagging a web strip to form a pile on the support, of a pressure device at each side of the support each comprising a rockable shaft journalled in suitable bearings, a pair of radial arms carried by the rocking shaft, means for rocking the shaft to carry the arms outward and inward as each fold is made, a rod held in the outer end of the arms, a pressure plate provided with depending arms swung upon the aforesaid rod intermediate of their length, a leaf spring secured to one arm and bearing at its free end against an arm of the rock shaft, and a bracket carried on a suitable support and provided with lateral projections located in the path of swing of the lower ends of the arms of the pressure plate to tilt the pressure plate upward or downward as it is carried into proximity with such projections.

15. In a zigzag pile forming machine, the combination with a pair of opposing standard plates, a pair of shafts journalled in the standard plates, a web feeding roller secured to each shaft, means for resiliently pressing the rollers together to grip the web passing therebetween, a supporting rod carried by the standard plates at each side of the feeding rollers, hangers carried by the supporting rods, a rock shaft journalled in the hangers, stripper fingers carried by each rocking shaft, and cam means operated by the feed roller shafts for rocking the rock shafts.

16. In a zigzag pile forming machine, a pair of web feeding rollers through which the web is adapted to pass, means for creasing the web alternately on opposite sides as it passes therethrough, a rock shaft located at each side of the feed rollers and the pile, stripper fingers carried by the rock shafts to alternately engage the adjacent feed roll and pile top, a perforated air tube extending parallel to the rock shafts, an air supply pipe for feeding air to each tube, a valve controlling the flow of air through the supply pipe, and means for automatically opening the valves as the stripper fingers are raised into contact with the feed rolls.

WALTER HAROLD SMITH.