United States Patent [19]

Hade

[11] **Des. 245,213**

[45] ** **Aug. 2, 1977**

[54] **SETTEE**

[76] Inventor: **Horace A. Hade,** 6303 Valley Drive, R.R. No. 2, Grabill, Ind. 46741

[**] Term: **14 Years**

[21] Appl. No.: **661,941**

[22] Filed: **Feb. 27, 1976**

[51] **Int. Cl.** ..... **D6—01**
[52] **U.S. Cl.** **D6/60**
[58] **Field of Search** D6/59–63, D6/47, 67–78

[56] **References Cited**

U.S. PATENT DOCUMENTS

D. 208,699	9/1967	Shoemaker	D6/73
D. 222,051	9/1971	Shannon	D6/60
D. 222,453	10/1971	Ziss et al.	D6/70
D. 237,434	11/1975	Le May, Jr.	D6/60

OTHER PUBLICATIONS

"Lane Occasional Tables," Cat. Rec'd, 2–2–1974, Cocktail Table No. 1203–01.

Primary Examiner—Bruce W. Dunkins
Attorney, Agent, or Firm—David A. Lundy

[57] **CLAIM**

The ornamental design for a settee, as shown and described.

DESCRIPTION

FIG. **1** is a perspective view showing the front and a side of the settee showing my new design, both sides thereof appear identically;
FIG. **2** is a top view thereof; and
FIG. **3** is a bottom view thereof, with the settee tipped toward the viewer so as to illustrate both the bottom and the rear thereof.

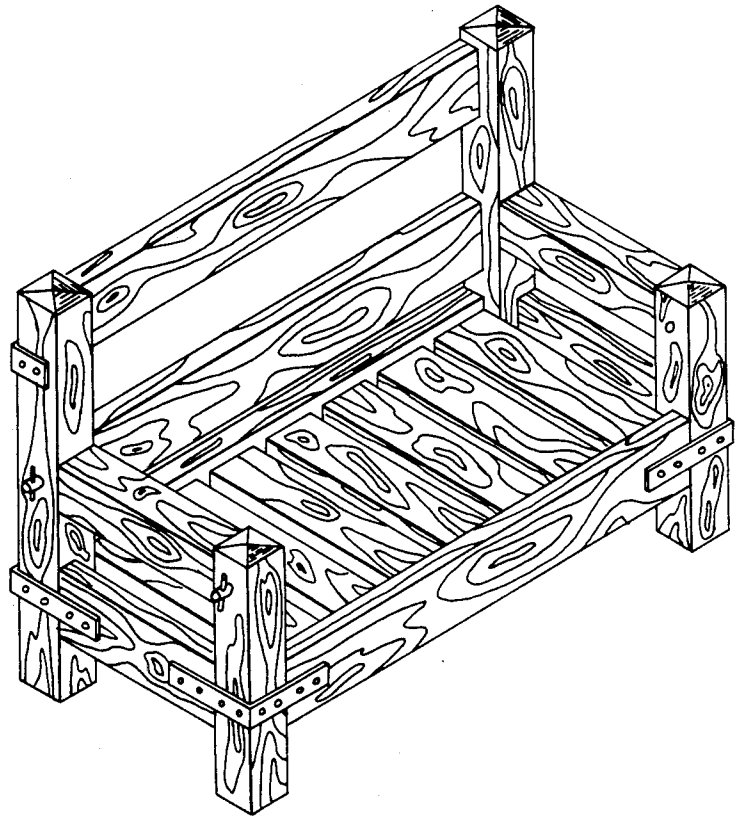

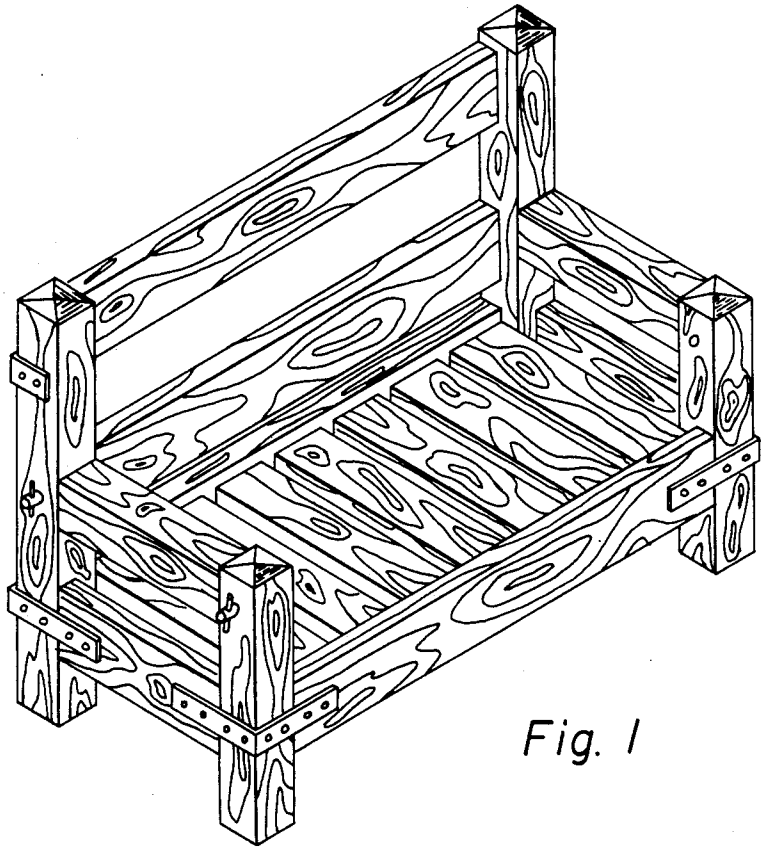

Fig. 1

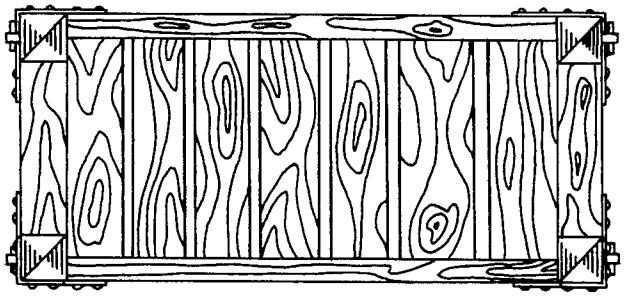

Fig. 2

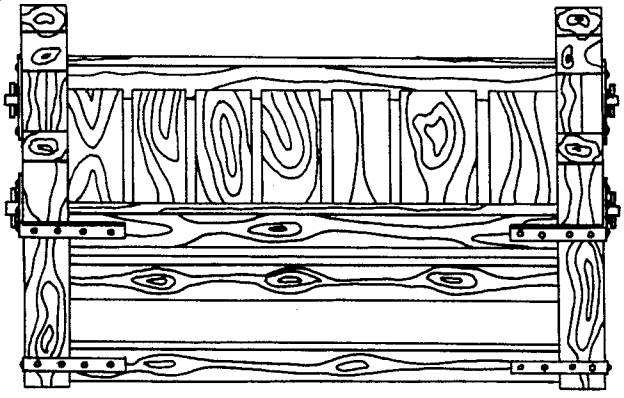

Fig. 3