May 19, 1936. C. E. STOUCH 2,040,961

INKING SYSTEM FOR PRINTING PRESSES

Filed Aug. 17, 1935

Fig. 1

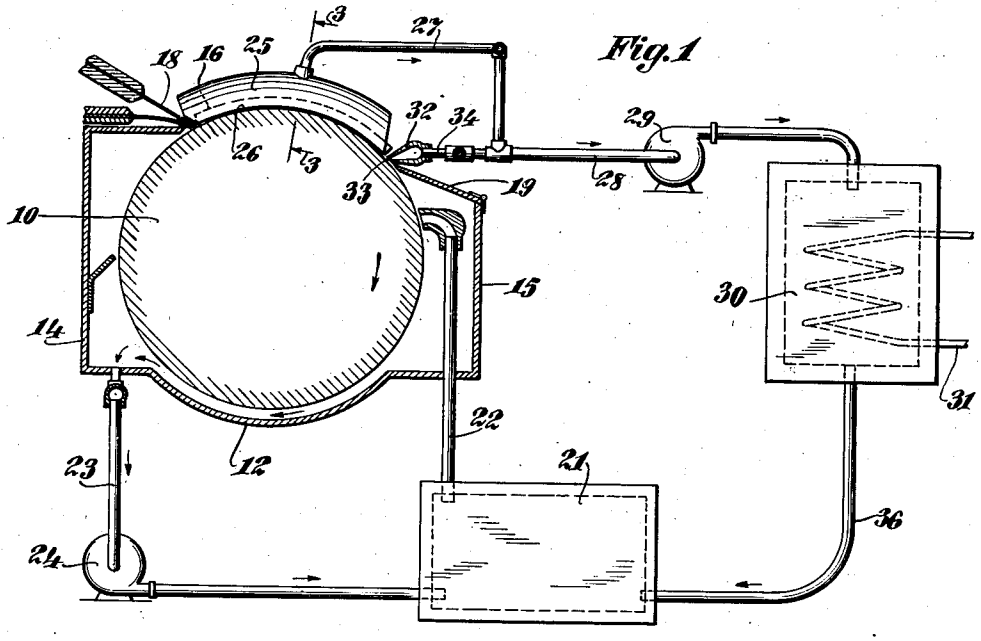

Fig. 2

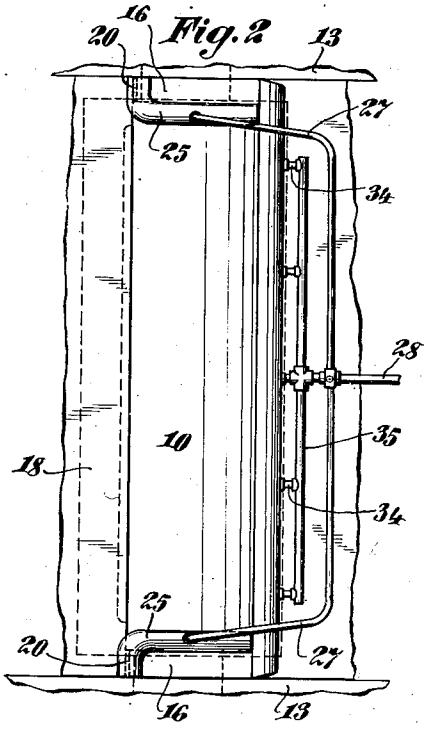

Fig. 3

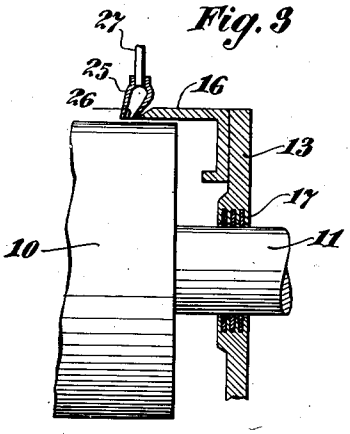

INVENTOR.
Clarence E. Stouch,
BY Hoguet, Neary & Campbell,
HIS ATTORNEYS

Patented May 19, 1936 2,040,961

UNITED STATES PATENT OFFICE

2,040,961

INKING SYSTEM FOR PRINTING PRESSES

Clarence E. Stouch, Great Neck, N. Y., assignor to Speedry Gravure Corporation, New York, N. Y., a corporation of New York

Application August 17, 1935, Serial No. 36,609

6 Claims. (Cl. 101—157)

The present invention relates to printing presses and embodies, more specifically, an improved housing structure for printing presses of the type which utilizes ink, the solvent or solvents of which are relatively volatile. Presses of this type are now in common use, particularly in rotary gravure printing, the highly volatile ink enabling the speed at which the press is operated to be increased substantially by reason of the quick drying properties of such inks.

In order that these highly volatile inks may be satisfactorily used, and to prevent objectionable evaporation of the volatile ink ingredients during operation, presses have heretofore been constructed wherein the ink housings are formed with elements constituting seals between the stationary and movable parts. To this end, seals are provided at the ends and sides of the housing, cooperating with the ends and sides of the rotating cylinder and forming a closed housing within which the ink is applied to the printing surface of the cylinder and to which ink is supplied by a suitable ink circulating system.

In accordance with the present invention, it is proposed to provide a housing having closure elements which need not necessarily constitute a complete seal between the stationary and movable elements, the invention providing a means by which the volatile ingredients escaping from the housing may be recovered and suitably treated.

An object of the invention, accordingly, is to provide, in combination with an ink housing and a printing press, means to prevent the loss of volatile ink ingredients from the housing and ink circulating system of a press.

A further object of the invention is to provide, in combination with an ink housing which may be only partially enclosed, a means by which volatile ingredients escaping from the housing may be recovered.

A further object of the invention is to provide a mechanism and system for use in connection with ink housings of printing presses by means of which volatilized ink ingredients may be prevented from escaping to the external atmosphere.

A further object of the invention is to provide a mechanism for recovering volatilized ink ingredients escaping from an enclosed or partially enclosed ink housing of a printing press, such mechanism being positioned on the housing adjacent the points where leakage or escape of the volatilized ingredients occurs.

The mechanism by means of which the above objects are attained includes suction manifolds positioned adjacent the cylinder at the points at which volatilized ink ingredients escape from the ink housing, the manifolds being connected to a suction system which directs the recovered volatilized ingredients to a suitable recovery apparatus. This mechanism will be more readily understood in connection with the accompanying drawing, wherein

Figure 1 is a schematic illustration of a system constructed in accordance with the present invention;

Figure 2 is a plan view of the cylinder and adjacent housing portions of a press upon which a device constructed in accordance with the present invention has been applied, the view being of corresponding elements shown in Figure 1; and

Figure 3 is a segmental view in section, taken on the line 3—3 of Figure 1, and looking in the direction of the arrows, this view illustrating the manner in which the end manifolds are mounted upon the stationary housing structure.

With reference to the above drawing, the cylinder of a printing press is shown at 10 and is provided with a shaft 11 which may be journaled in a suitable supporting structure, not shown. In order that the volatile ingredients of the ink applied to the cylinder may not escape to the outside atmosphere, a housing 12 is provided, the housing being formed with end walls 13 and side walls 14 and 15. The end walls 13 are formed with upper flanges 16 which may underlie the adjacent ends of the cylinder 10 and serve to partially enclose the ink within the housing. Seals 17 are provided at the end walls 13 in order that ink and the volatile ingredients thereof may not escape along the shaft 11, and a doctor 18, of suitable construction, is provided to wipe the excess ink from the surface of the cylinder prior to the impression stage of the printing operation.

The doctor 18 may be suitably mounted upon the press and preferably seals the adjacent side wall 14 to the rotating cylinder during operation. The details of the mounting structure for the doctor are not described herein inasmuch as these elements constitute no part of the present invention.

The side wall 15 is preferably provided with a cover 19 which may serve as a partial enclosure for the adjacent side of the housing to limit the space through which volatile ink ingredients may escape from the housing. In this connection, the cover 19 may be so associated with the end walls 13 and the side wall 15 as to prevent the escape

of ink from the housing between such elements.

Inasmuch as the doctor 18 is usually reciprocated during the operation of the press, the flanges 16 constituting partial end enclosures cannot effectively be associated with the doctor 18 in such fashion as to prevent the escape of volatile ink ingredients from between the doctor and the adjacent portion of the end enclosure 16. This is illustrated in Figure 2 wherein, at 20, is indicated a space to accommodate the proper operation of the doctor.

Ink is supplied to the cylinder from a reservoir 21 through a pipe 22 by any suitable pressure means and is preferably discharged outwardly against the rotating cylinder in order that its printing surface may be adequately inked. After the inking operation, the ink is returned to the reservoir 21 through a pipe 23 and by means of a pump 24. As above noted, if it is not found expedient to maintain an effective seal between the cover 19 and the cylinder 10, or between either end enclosure 16 and the adjacent end of the cylinder 10, the volatile ink ingredients will escape from these respective members. In order that these ingredients may not be lost, and to preserve a desired ink constituency, end manifolds 25 are mounted upon the stationary press structure and are provided with openings 26 which are disposed adjacent the spaces between the end enclosure 16 and the cylinder 10 through which the volatile ink ingredients escape. The manifolds 25 are connected through pipes 27 with a suction line 28 and a suction pump 29 in order that these volatilized ingredients may be returned to a suitable condensing apparatus 30. This apparatus may be of any form suited for condensing the particular volatile ingredients of the ink and the specific form of such apparatus constitutes no part of the present invention, a cooling coil 31 being shown in the apparatus 30 as one means of facilitating the condensation of the volatilized ink ingredients.

If the space between the cover 19 and the cylinder 10 is such as to occasion loss of the volatilized ink ingredients from the housing, a manifold 32 may be positioned as illustrated in Figure 1 in order that the orifice 33 thereof may extend along the aforesaid space and recover the volatilized ingredients which escape therethrough. The manifold 32 may be connected through a series of connections 34 with a pipe 35 which communicates with the suction line 28 in order that such recovered ingredients may be supplied to the condensing apparatus 30. After the escaped ingredients have been condensed, they are returned through pipe 36 to the reservoir 21, thus maintaining the ink in the ink circulating system at a desired consistency.

Obviously, the present invention may be utilized on presses the ink housings of which may be sealed to any desired degree. If found expedient to construct the housing of a more or less totally enclosed and air tight nature, the present invention may be used as an auxiliary device which serves as an additional precaution or preventative against loss of the volatilized ink ingredients. If it is found inexpedient to preserve a substantial seal between the cylinder and the adjacent housing portions, the present invention becomes particularly useful in preserving the ink in a desired condition. In any event, loss of the volatilized ink ingredients is effectively prevented, and the invention is not to be limited, save as defined in the appended claims.

I claim:

1. In combination with a printing press having a rotatable printing cylinder and an ink housing adapted to receive ink having a relatively volatile ingredient, means to recover volatile ink ingredients escaping from adjacent the cylinder, means to condense the volatile ink ingredients, and means to return the condensed ingredients to the ink housing.

2. In combination with a printing press having a rotatable printing cylinder, an ink housing adapted to receive ink having a relatively volatile ingredient, means to seal the space between the cylinder and the housing, and means to recover volatile ink ingredients escaping from between the sealing means and the cylinder.

3. In combination with a printing press having a rotatable printing cylinder, an ink housing adapted to receive ink having a relatively volatile ingredient, means to seal the space between the cylinder and the housing, and a suction manifold to recover volatile ink ingredients escaping from between the sealing means and the cylinder.

4. In combination with a printing press having a rotatable printing cylinder, an ink housing adapted to receive ink having a relatively volatile ingredient, means to seal the space between the cylinder and the housing, a suction manifold to recover volatile ink ingredients escaping from between the sealing means and the cylinder, and means to return the collected volatile ink ingredients to the housing.

5. In combination with a printing press having a rotatable printing cylinder, an ink housing adapted to receive ink having a relatively volatile ingredient, means to seal the space between the cylinder and the housing, a suction manifold to recover volatile ink ingredients escaping from between the sealing means and the cylinder, and means to condense and return the collected volatile ink ingredients to the housing.

6. In combination with a printing press having a rotatable printing cylinder and an ink housing adapted to receive ink having a relatively volatile ingredient, means between the cylinder and housing to restrict the escape of volatile ink ingredients, and means to recover volatile ink ingredients escaping from adjacent the last named means.

CLARENCE E. STOUCH.