Dec. 6, 1927. 1,651,411

A. A. PORTER

FOUNDATION FOR EARTHQUAKEPROOF BUILDINGS

Filed Sept. 9, 1926

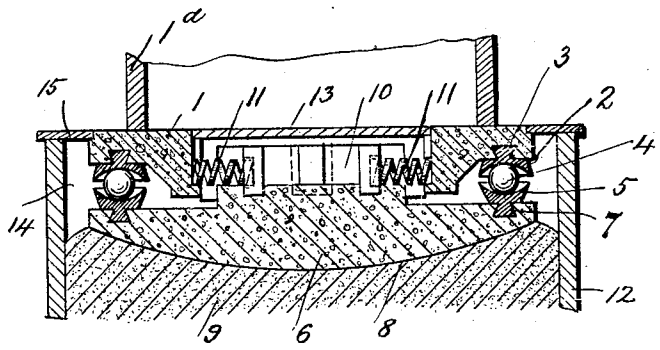

FIG. 1.

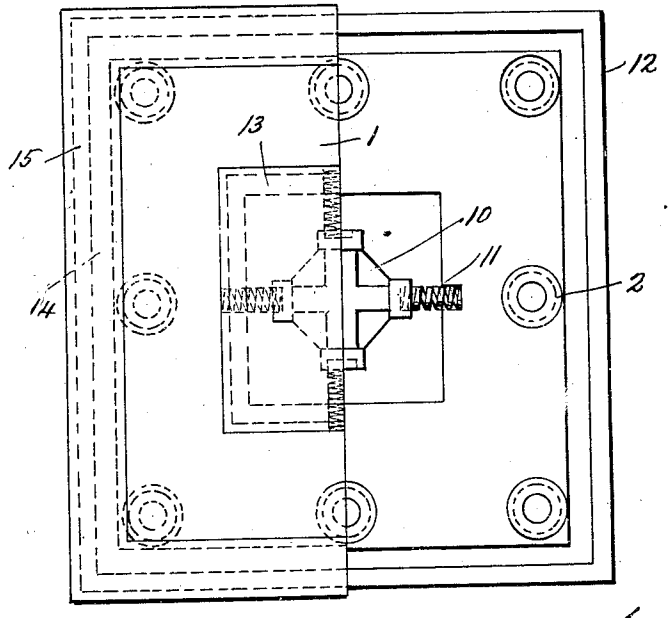

FIG. 2.

Inventor.
Amelia A. Porter
by Herbert W. Jenner
Attorney.

Patented Dec. 6, 1927. 1,651,411

UNITED STATES PATENT OFFICE.

AMELIA ANNE PORTER, OF LANCASTER, ENGLAND.

FOUNDATION FOR EARTHQUAKEPROOF BUILDINGS.

Application filed September 9, 1926. Serial No. 134,383.

This invention has relation to the construction of foundations of dwellings and other buildings and has in contemplation more especially means to render the superstructures built or erected thereon immune from damage or destruction by earthquake shocks.

The purpose of my said invention and its primary object is the production of a separate and detached foundation and a movable connection between the base of the superstructure and the said foundation possessing advantages in point of efficiency and durability in that the said superstructure is permitted movement and oscillation in all directions by means of steel balls located and adapted to move within saucer-shaped housings.

Another object of my invention is to provide spiral, leaf or other springs located in the space between the upper surface of the foundation slab and the underside of the superstructure for the purpose of absorbing lateral vibrations caused through earthquake shocks.

A further object of my invention is to provide the separate and detached foundation with a specially shaped slab or block of reinforced concrete and the location of this detached foundation member in a bed of fine sand, ground pumice stone or the like, that can flow to a certain extent under the effects of oscillation or upheaval.

With the above mentioned and other objects in view, the invention consists in the novel construction and combination of parts hereinafter described, illustrated in the accompanying drawings and specified in the claims hereto appended it being understood that various changes in the form, proportion, sizes and minor details of construction within the scope of the invention may be resorted to without departing from the spirit or sacrificing any of the advantages of the invention.

To more fully comprehend the invention, reference is directed to the accompanying drawings forming a part hereof and of which:—

Fig. 1 is a sectional elevation illustrating the general arrangement of the foundation for earthquake-proof buildings forming the subject matter of my present invention;

Fig. 2 is a part sectional plan of the same.

Referring more particularly to the several views of the drawings, wherein like numerals of reference designate corresponding parts throughout the several views, the superstructure base 1 is constructed of reinforced concrete or other suitable material and is shaped as shown in Figure 1 or having substantially that configuration. The lower outer surface of the superstructure base 1 is provided with a multiplicity of saucer-shaped members 2 provided with dove-tailed or other suitably shaped portions 3 by means of which the said members 2 are rigidly affixed to the base 1. These saucer-shaped members 2 are adapted to accommodate steel balls 4 which are retained in position by similarly saucer-shaped members 5, located in axial alignment with the members 2, and which are retained in position upon the foundation 6 by means of dove-tailed or other suitably shaped stems 7.

The foundation 6, upon which the base 1 carrying the superstructure is adapted to rest, consists by preference of a solid block of concrete which may be reinforced by steel girders and tie-rods, and the underside 8 of this foundation block is fish-bellied or boat-shaped and adapted to rest upon a bed of fine sand 9 or ground pumice stone. The central upper portion of the foundation block 6 is provided with a projection 10 which may be shaped as shown in Figure 2, or the same may be of circular formation. Spiral, leaf or other suitable springs 11 are located around the projection 10 of which one end abuts against the same and the other end of these springs is adapted to abut against the superstruction base 1. The purpose of these springs is to hold the base 1 and consequently the superstructure normally in the position shown in Figure 1 and to return the same always to this position after any temporary movement of the foundation.

The fine sand 9, ground pumice stone or other suitable material under the foundation 6 is intended to flow easily under the effect of oscillation or upheaval and to allow a new layer to be formed to support the boat-shaped bottom 8 of the said foundation when the same returns to its initial position. The foundation slab 6 will be constructed as a girder sufficiently strong to withstand undermining to at least half its area, in order that in case of upheaval it may ride upon the bed of fine sand in a similar manner as a ship rides upon the waves, without breaking its back. In case the foundation settles unevenly after a disturbance, it

will only be necessary to excavate some sand to allow it to sink again to a true level.

In constructing the foundation the soil is excavated to an extent somewhat larger than the proposed building and deep enough to contain the concrete slab 6 and sand 9. The excavated part is lined with a concrete or other suitable material wall 12 to form a container for the above mentioned fine sand and slab.

The central portion of the superstructure base 1 is closed by means of boards 13 or the like located in such manner that the upper surface of the same is substantially level with the upper surface of the said base. The cavities 14, formed between the outer walls 12 and foundations are closed through the medium of boards 15, but the same may also be closed by means of thin steel plates or concrete slabs. These boards are not affixed in any way so as not to interfere with the movements of the foundations.

The superstructure 1^a, which is only partially shown in Figure 1, built on foundations such as described hereinbefore and shown in the drawings, may be of wood, corrugated iron, or any other material or construction, but a framed structure of fireproof material is preferred, such as for example those wherein ferro-concrete slabs are bound together by continuous tie-rods forming a box-like structure which may be canted over to any angle without displacing any of its parts.

Having now particularly described my invention what I claim as new, and desire to secure by Letters Patent is:—

1. A foundation, comprising an upper block provided with a chamber, a lower block having a projection arranged in the chamber, springs interposed between the projection and the walls of the chamber, and pivot bearings spaced apart and arranged outside the chamber between the upper block and the lower block and permitting the upper block to oscillate in a horizontal plane.

2. A foundation as set forth in claim 1, the said lower block having a convex bottom, and having a bed of granular material arranged under its bottom.

3. A foundation as set forth in claim 1, the said lower block having a convex bottom, and having a bed of granular material arranged under its bottom, and an outer protecting wall holding the granular material laterally in place and extending upwardly past the pivot bearings and spaced apart from the said upper block.

In witness whereof I affix my signature.

AMELIA ANNE PORTER.