Dec. 7, 1937. E. A. WINFIELD 2,101,605

AUTOMATIC THROTTLE CONTROL

Filed June 13, 1936 2 Sheets-Sheet 1

Fig. 1.

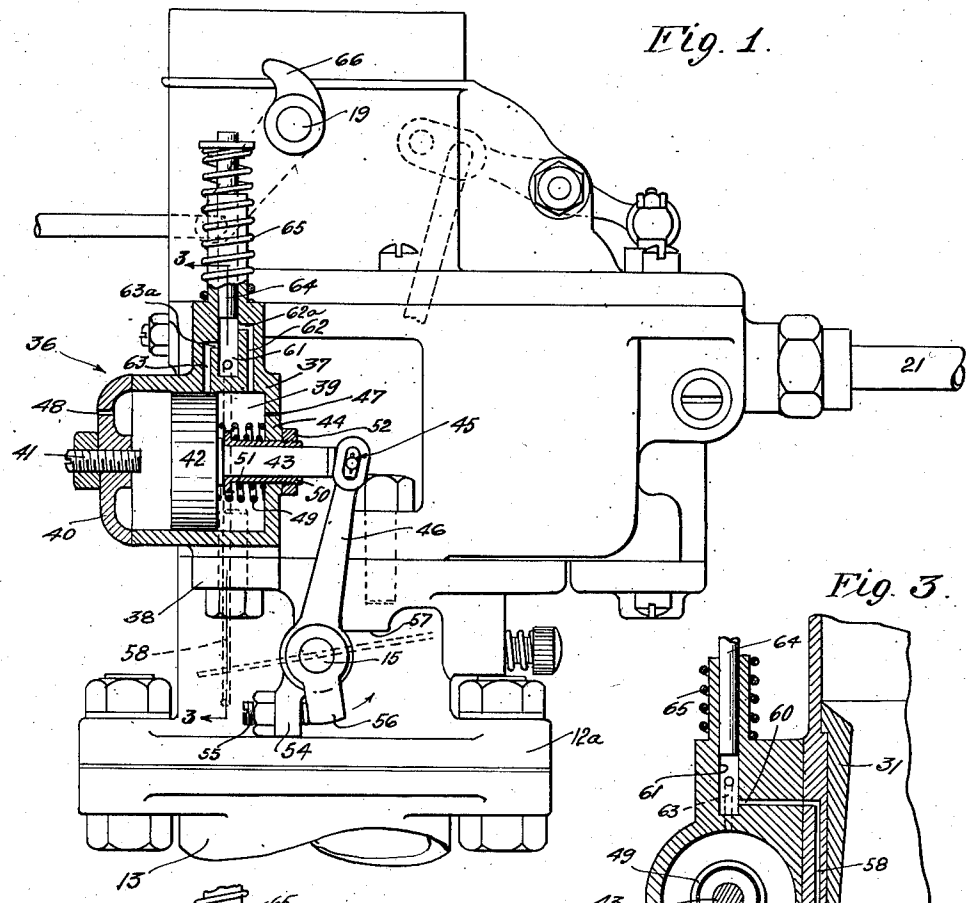

Fig. 3.

Fig 2.

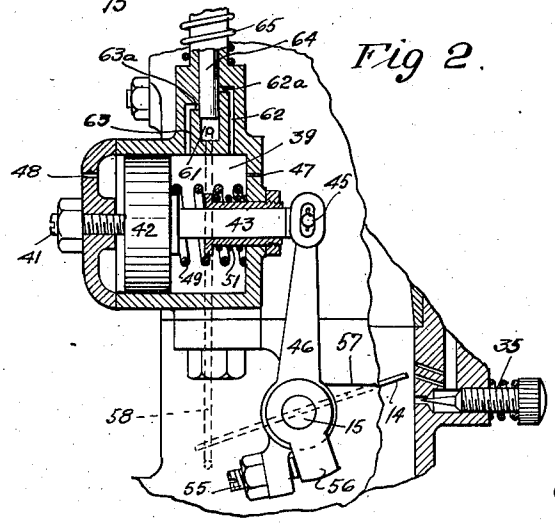

Inventor.
Edward A. Winfield.

Attorney.

Dec. 7, 1937. E. A. WINFIELD 2,101,605

AUTOMATIC THROTTLE CONTROL

Filed June 13, 1936 2 Sheets-Sheet 2

Fig. 4.

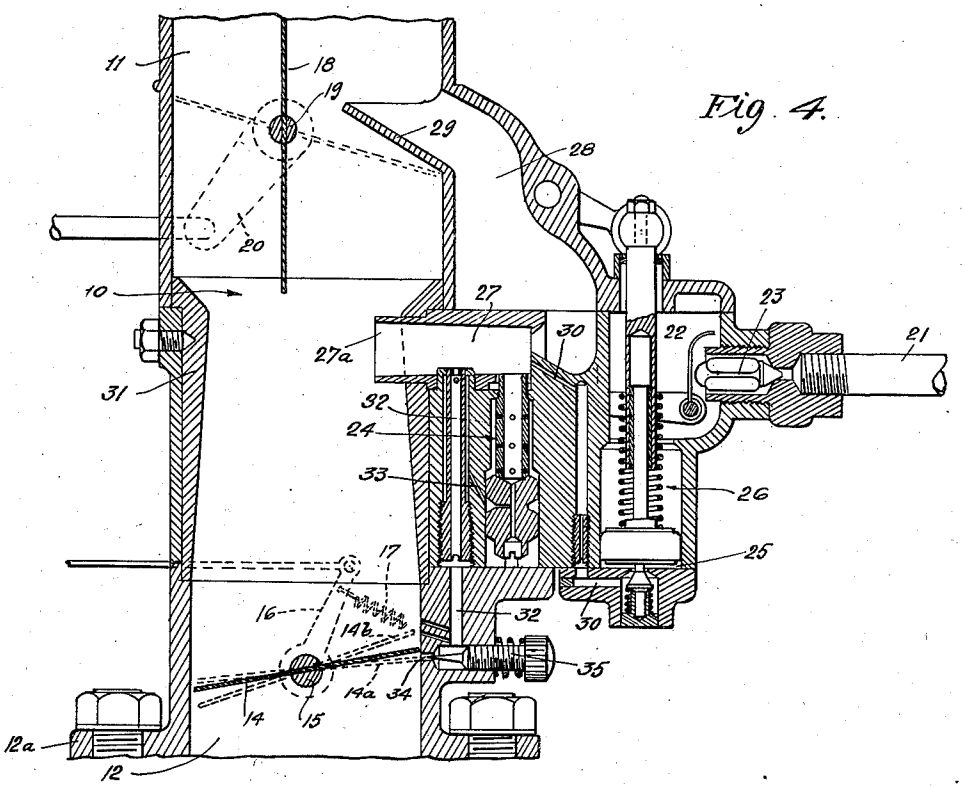

Fig. 5

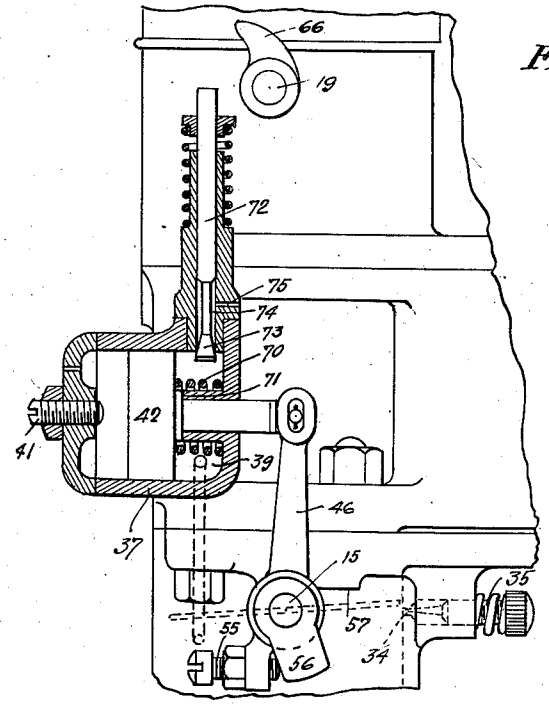

Inventor
Edward A. Winfield

Attorney.

Patented Dec. 7, 1937

2,101,605

UNITED STATES PATENT OFFICE

2,101,605

AUTOMATIC THROTTLE CONTROL

Edward A. Winfield, La Canada, Calif., assignor to California Machinery & Supply Co., Ltd., Los Angeles, Calif., a corporation of Delaware

Application June 13, 1936, Serial No. 85,092

13 Claims. (Cl. 123—103)

This invention relates generally to fuel feeding apparatus for internal combustion engines, and has for its main purpose to provide an automatic throttle control acting in accordance with pressure conditions in the engine air supply passage beyond the throttle in the direction of air flow, to economize on fuel by causing the throttle to cut off the normal idling fuel supply under certain conditions of engine operation, as when the manifold pressure decreases below idling manifold pressure, or, where the invention is applied to an automobile engine, when the vehicle is driving the engine in down hill operation.

In its preferred form, the invention embodies a suitable pressure responsive member actuated in accordance with pressure variations in the air suction passage at the outlet side of the throttle, and operatively connected to the throttle in a manner such that under certain conditions of operation the pressure responsive member will move the throttle in an opening direction. When the engine is operating at substantially idling speed and for some reason tends to stall, causing the suction passage outlet pressure to increase somewhat from normal idling pressure, the throttle control acts automatically to increase the throttle opening momentarily or until the idling manifold pressure is restored to normal. The principal novel feature of the invention however is the automatic cut-off for discontinuing the normal idling fuel supply under operating conditions when it is desirable to avoid using unnecessary fuel. For reasons that will later appear, the throttle control may advantageously, though not necessarily, be connected with a choke valve in carbureter installations, so that the operation of the throttle control is modified in accordance with movements of the choke valve.

The invention has a number of additional aspects and objects, but all these as well as the features mentioned above, will be explained and understood to best advantage from the following detailed description of the invention in certain typical and illustrative forms. Throughout the description I refer to the accompanying drawings, in which:

Fig. 1 is a side elevation illustrating a typical embodiment of the invention, a portion of the automatic throttle control device being shown in section;

Fig. 2 is a fragmentary view partly in section, showing certain parts of the throttle control device in changed position;

Fig. 3 is a fragmentary section on line 3—3 of Fig. 1;

Fig. 4 is a sectional view of the carbureter proper; and

Fig. 5 is a view similar to Fig. 2 illustrating a variational form of the invention.

It is to be understood that the invention is generally applicable to various different types of engine fuel feeding apparatus utilizing a throttle controlled suction passage through which air is taken to the engine. The present automatic throttle control is conveniently applicable to the ordinary gasoline carbureter, and for the purpose of illustrating and describing a typical and specific embodiment of the invention, I have shown the throttle control to be applied to a carbureter which in itself comprises the subject matter of my copending application, Ser. No. 85,093, entitled Carbureter and filed on even date herewith. For purposes of the present application, a brief general description of the carbureter will suffice, since the invention is in no way concerned with the carbureter details, and the latter may be more fully ascertained by reference to the copending application referred to.

In the sectional view of Fig. 4, the carbureter is shown to comprise a suction passage 10 having an air inlet 11 and a fuel and air mixture outlet 12, the flanged end 12a of which is bolted to the engine intake manifold 13. As used herein, and except when otherwise limited, the term "suction passage" may be regarded as inclusive of the engine manifold 13. The flow of air to the engine is controlled by a suitable throttle, typically the usual butterfly valve 14, carried on shaft 15 and operated by a lever arm 16, the throttle opening against a suitable spring resistance conventionally illustrated by spring 17 attached to lever 16. Choke valve 18 positioned within the inlet 11 is mounted on a shaft 19 offset from the axial center of the carbureter suction passage and operated in the usual manner by a lever 20 attached to its outer end. Fuel is fed from inlet line 21 into the supply chamber 22 under control of a float operated valve 23, and from the supply chamber the fuel flows to main fuel nozzle generally indicated at 24 and into the displacement chamber 25 of a positive displacement accelerating fuel feeding means indicated at 26.

Fuel is fed from the main fuel nozzle 24 into a metering tube 27 within a passage 28 through which a portion of the suction passage air is diverted by a baffle 29 projecting from the side

of the passage at the inlet. During periods of acceleration, fuel also is discharged into the metering tube from passage 30 leading from the displacement chamber 25 of the accelerating fuel supply means 26. The fuel and air mixture formed within the diversion passage is discharged from the outlet end 27a of the metering tube into the throat of the venturi 31 in the main suction passage, and is thence taken into the intake manifold under control of throttle 14. During engine idling operation, fuel is supplied to the suction by way of an idling by-pass passage 32 receiving its fuel via passage 33 from the bore containing the main nozzle 24, the fuel being discharged from passage 32 through orifice 34 whose effective size is regulated by needle valve 35. In its normal idling position, throttle 14 is in substantially the solid line position in which orifice 34 is openly exposed to the suction at the outlet side of the throttle. When fully closed however the throttle assumes the dotted line position 14a in which the throttle edge moves past orifice 34 to the point of closing it from the suction passage outlet 12, and thereby discontinuing the fuel supply through the idling by-pass due to the outlet suction being cut off from the delivery orifice.

The automatic throttle control, with which the invention is more particularly concerned is generally indicated at 36 in Fig. 1, and in its preferred form is shown to comprise a body 37 suitably mounted on the carbureter body, as by attachment to boss 38. The body 37 contains a cylindric chamber 39 closed at its outer end by cover 40 carrying a stop screw 41. Chamber 39 contains a pressure responsive member in the form of a piston 42 having a rod 43 projecting through the inner closed end 44 of the body and attached by a pin and slot connection at 45 with a lever arm 46 rotatably carried on the throttle shaft 15.

Chamber 39 is vented to the atmosphere at opposite sides of the piston 42 through orifices 47 and 48. The piston travel toward the right and in a throttle closing direction is yieldably resisted by a coil spring 49 confined between the piston and end wall 44 of the body. As will later appear under certain operating conditions the spring resistance is overcome by depression communicated to chamber 39 at the right of the piston, causing the latter to travel to the point of engagement with sleeve 50. Then, as the depression in the chamber is further increased, additional piston travel in throttle closing direction is permitted by compression of spring 51 confined between wall 44 and the flanged end of sleeve 50. Spring 51 normally is maintained in a partially compressed condition by adjustment of nut 52 so that the spring maintains a predetermined and somewhat greater resistance to the piston travel, than the resistance imposed by spring 49.

When the depression in chamber 39 is relieved, spring 49 moves piston 42 toward the left to a limiting position of engagement with stop screw 41, during which time the throttle moves an angular distance of around 5° from closed position to the dotted position 14b. It will be understood that piston 42 may have any suitable length of travel to give the throttle the desired range of movement under the influence of the piston, although a range of throttle movement of around 5° will generally give satisfactory performance. A lug 54 integral with the lever arm 46 that rotates on the throttle shaft 15, carries an adjustable stop screw 55 adapted to engage projection 56 on the throttle shaft to limit the throttle position in a closing direction and to open the throttle as piston 42 travels toward the left. When the throttle is manually rotated to full open position, projection 56 swings in the direction of the arrow and away from stop 55 into engagement with a downwardly facing shoulder 57 on the carbureter body. It will be noted that by reason of its connection with the piston 42, stop 55 will be variably positioned relative to the throttle projection 56 depending upon the position of the piston, which in turn is dependent upon the pressure conditions existing within chamber 39.

The suction passage pressure at the outlet or manifold side of the throttle is communicated to chamber 39 by way of passage 58, see Fig. 3, leading at 59 from a suitable location beyond the throttle and connecting at 60 with a bore 61 communicable with the piston chamber through passages 62 and 63. Bore 61 contains a valve 64 normally held in the raised position of Fig. 1 by a coil spring 65, and adapted to be moved downward to close one or both of passages 62 and 63 when engaged by cam arm 66 carried on the end of the choke valve shaft 19, as will later appear.

In considering the operation of the throttle control device, let it first be assumed that the engine is idling with the throttle in substantially the position shown in Fig. 4, or perhaps slightly opened from that position. The depression existing at the outlet side of the throttle and communicated to the piston chamber 39 via passage 58, bore 61 and passages 62 and 63, causes the piston 42 to assume the position shown in Fig. 1, in which spring 49 is compressed and the piston is at substantially the point of engagement with the end of sleeve 50. If now for any reason the engine tends to stall or miss fire, there occurs a reduction in the engine speed and a corresponding increase in the pressure within the suction passage at the engine side of the throttle. Immediately as the pressure increases within the suction passage outlet 12, the pressure increase is communicated via passage 58 to the piston chamber 39 causing spring 49 to move the piston toward the left and to move the throttle in an opening direction to admit more fuel and air to the manifold momentarily or until manifold pressure is restored to normal.

The throttle control automatically responds to the pressure increase in the suction passage under the conditions described, and automatically opens the throttle just the necessary distance for preventing the stalling of the engine. That distance may of course vary in different installations, depending upon the type of engine and its fuel requirements, and the operation of the fuel supply apparatus. After the engine again is running smoothly and the normal depression is restored in the suction passage outlet, piston 42 again moves to the right, returning the throttle to its normal idling position. It will be understood that in its throttle opening movement, the control device 36 overcomes the resistance of the usual throttle closing spring 17. As the operator opens the throttle beyond idling position to increase the engine speed, the suction passage outlet pressure increases, causing spring 49 to move piston 42 into engagement with the stop 41, as illustrated in Fig. 2.

Under certain conditions of operation, as for example when the vehicle is running down grade and is driving the engine, it may be desirable to entirely or substantially entirely cut off the sup-

ply of fuel to the engine. Assuming the throttle to be in substantially the position of Fig. 4 and the vehicle to be driving the engine, an abnormally high depression, in excess of the normal idling depression, is created within the suction passage outlet 12. This high depression, communicated to chamber 39, moves the piston toward the right against the resistance of both springs 49 and 51, and swings stop 55 a distance sufficient to permit throttle 14 to close fully to the dotted line position 14a. In this position the throttle edge completely closes orifice 34 at the suction passage outlet side and cuts off the normal idling fuel delivery through passage 32, thus effecting a saving of the fuel that otherwise would be wasted during periods when the engine is being driven. In stating that the throttle edge closes the orifice, I mean that the orifice is substantially entirely cut off from the manifold suction. Preferably, as shown, the throttle on closing will move to a position such that at least a portion of the orifice will be exposed to the pressure (substantially atmospheric) at the inlet side of the throttle.

When the engine is being started and the choke valve 18 is closed to insure the delivery of an enriched fuel mixture to the engine, it may be desirable in effect to render the throttle control device 36 inoperative to insure that the throttle will remain in a closed position set by adjustment of the throttle control arm 16. For this purpose I provide a valve 64 which when engaged by cam arm 66 as the choke valve is closed, is moved downwardly to a position in which it covers both ports 62a and 63a, see Fig. 2 to render the piston unresponsive to pressure conditions beyond the throttle by cutting off communication between passage 58 and chamber 39. It may however be desirable in starting when the choke valve is used, to take advantage of the throttle control device 36 for the purpose of causing the throttle to be automatically opened in the manner previously described, to prevent the engine from stalling in the event the fuel mixture becomes too rich. Under this condition, the choke may be closed to the extent of causing valve 64 to close only port 62a, leaving port 63a open to maintain a communication of suction from passage 58 to the piston chamber via passage 63. When the engine is idling then, piston 42 will have been moved to the right just to the point of covering passage 63. Should the suction passage outlet pressure increase due to the tendency of the engine to stall, piston 42 is permitted to move toward the left, away from passage 63, during which interval of travel the throttle will have been opened sufficiently to keep the engine running.

Fig. 5 shows a variational type of throttle control device generally similar to the previously described form, although somewhat simplified in that it omits the feature of providing a second spring adapted to be compressed by the piston during final closing movement of the throttle when the engine is being driven, and lacking the feature of a choke valve that may permit only partial piston travel under control of the choke. Here the piston travel in a throttle opening direction is opposed by a single coil spring 70 and the piston travel is limited by engagement with a stop 71 at a point corresponding to the illustrated throttle position in which the idling fuel orifice 34 remains open at fully closed throttle position. When the choke valve is closed, arm 66 depresses rod 72, unseating valve 73 to bleed chamber 39 to the atmosphere through bore 74 and orifice 75, and thereby to render the piston unresponsive to pressure changes in the suction passage outlet when the choke is closed. Otherwise the variational form of throttle control operates similarly to the first described form and thereby requires no further explanation.

I claim:

1. In a vehicle engine fuel feeding apparatus including a suction passage containing a throttle and having an air inlet and an outlet; means for supplying fuel to said passage through an orifice that is closed by said throttle when the throttle is fully closed, but which is opened by the throttle as the latter is slightly opened, means tending normally to maintain said throttle in partially open position during idling engine operation, and means for moving said throttle to fully closed position in which the throttle closes said orifice, when the engine is being driven by the vehicle.

2. In engine fuel feeding apparatus including a suction passage containing a throttle and having an air inlet and an outlet; means for supplying fuel to said passage through an orifice that is closed by said throttle when the throttle is fully closed, but which is opened by the throttle as the latter is slightly opened means tending normally to maintain said throttle in partially open position during idling engine operation, and pressure responsive means communicating with said suction passage at the outlet side of the throttle and operating to move said throttle to fully closed position in which the throttle closes said orifice, when the pressure in said suction passage at the outlet side of the throttle decreases below the pressure existing therein during idling operation.

3. In engine fuel feeding apparatus including a suction passage containing a throttle and having an air inlet and an outlet; means for supplying fuel to said passage through an orifice that is closed by the edge of said throttle when the throttle is fully closed, but which is uncovered by the throttle as the latter is slightly opened, and pressure responsive throttle control means including a throttle stop movable with relation to the throttle, said pressure responsive means communicating with said suction passage at the outlet side of the throttle and tending normally to maintain the stop in such position that the throttle is in partially open position when the engine is idling, and operating to actuate the stop so that said throttle moves to fully closed position in which the throttle closes said orifice when the pressure in said suction passage at the outlet side of the throttle decreases below the pressure existing therein during idling operation.

4. In an engine carbureter having a body containing a suction passage having an air inlet and an outlet, and a throttle within said passage; the combination comprising, means for supplying fuel to said passage through an orifice that is closed by said throttle when the throttle is fully closed, but which is uncovered by the throttle as the latter is slightly opened, means tending normally to maintain said throttle in partially open position during idling operation, a body mounted on the carbureter body and containing a chamber communicating through a passage extending longitudinally within the wall of said carbureter body with said suction passage at the outlet side of the throttle, and pressure responsive means within said chamber operating to move the throttle to fully closed position in which the throttle closes said orifice when the

pressure in said suction passage at the outlet side of the throttle decreases below the pressure existing therein during idling operation.

5. In engine fuel feeding apparatus including a suction passage containing a throttle and having an air inlet and an outlet; the combination comprising, a body having a chamber therein, a pressure responsive member within said chamber, means connecting said member with the throttle, means communicating to the chamber within said body at one side of said member the suction passage pressure at the outlet side of the throttle, whereby a predetermined reduction in said pressure will move the throttle toward a closed position, but when said pressure increases beyond that reduced pressure, said member will move the throttle in an opening direction, and valve means for relieving suction in said chamber at said side of the pressure responsive member to affect the responsiveness of said member to said suction passage pressure changes.

6. In engine fuel feeding apparatus including a suction passage containing a throttle and having an air inlet and an outlet; the combination comprising, a body having a chamber therein, a pressure responsive member within said chamber, means connecting said member with the throttle, means communicating to the chamber within said body at one side of said member the suction passage pressure at the outlet side of the throttle, whereby a predetermined reduction in said pressure will move the throttle toward a closed position, but when said pressure increases beyond that reduced pressure, said member will move the throttle in an opening direction, a choke valve in said suction passage, and valve means operable with closing movement of said choke valve to relieve suction in said chamber to affect the responsiveness of said member to said suction passage pressure changes.

7. In engine fuel feeding apparatus including a suction passage containing a throttle and having an air inlet and an outlet; means for supplying fuel to said passage through an orifice that is closed by the edge of said throttle when the throttle is fully closed, but which is uncovered by the throttle as the latter is slightly opened, pressure responsive means tending normally to maintain said throttle in partially open position, means communicating to said pressure responsive means the suction passage pressure at the outlet side of the throttle, whereby said pressure under normal engine idling operation will move the throttle toward closed position but not sufficiently to close said orifice, said pressure responsive means however being responsive to further decrease in said suction passage pressure, to move said throttle to fully closed position in which the throttle closes said orifice.

8. In engine fuel feeding apparatus including a suction passage containing a throttle and having an air inlet and an outlet; means for supplying fuel to said passage through an orifice that is closed by the edge of said throttle when the throttle is fully closed, but which is uncovered by the throttle as the latter is slightly opened, pressure responsive means tending normally to maintain said throttle in partially open position, means communicating to said pressure responsive means the suction passage pressure at the outlet side of the throttle, whereby said pressure under normal engine idling operation will move the throttle toward closed position but not sufficiently to close said orifice, yielding means imposing a predetermined resistance to further closing movement of the throttle, said pressure responsive means being responsive to a pressure decrease in said suction passage pressure below normal idling pressure, to move said throttle to fully closed position in which the throttle closes said orifice.

9. In engine fuel feeding apparatus including a suction passage containing a choke valve, a throttle and having an air inlet and an outlet; the combination comprising, pressure responsive means tending to maintain said throttle in partially open position, means communicating to said pressure responsive means the suction passage pressure at the outlet side of the throttle, whereby a predetermined reduction in said pressure will move the throttle toward closed position, but when said pressure increases beyond that reduced pressure, said pressure responsive means will move the throttle in an opening direction, and means operating with closing movement of said choke valve to render said pressure responsive means substantially uninfluenced by said suction passage pressure changes.

10. In engine fuel feeding apparatus including a suction passage containing a choke valve and a throttle, said passage having an air inlet and an outlet; the combination comprising, pressure responsive means tending to maintain said throttle in partially open position, means communicating to said pressure responsive means the suction passage pressure at the outlet side of the throttle, whereby a predetermined reduction in said pressure will move the throttle toward closed position, but when said pressure increases beyond that reduced pressure, said pressure responsive means will move the throttle in an opening direction, and means for modifying the action of said pressure responsive means in accordance with the operation of said choke valve.

11. In engine fuel feeding apparatus including a suction passage containing a choke valve and a throttle, said passage having an air inlet and an outlet; the combination comprising, pressure responsive means tending to maintain said throttle in partially open position, means communicating to said pressure responsive means the suction passage pressure at the outlet side of the throttle, whereby a predetermined reduction in said pressure will move the throttle toward closed position, but when said pressure increases beyond that reduced pressure, the throttle will move in an opening direction, and means actuated in accordance with closing movement of said choke valve for controlling the communication of said suction passage pressure to the pressure responsive means.

12. In engine fuel feeding apparatus including a suction passage having an air inlet and an outlet, a throttle actuating shaft; the combination comprising, pressure responsive means tending to maintain said throttle in partially open position, means communicating to said pressure responsive means the suction passage pressure at the outlet side of the throttle, whereby a predetermined reduction in said pressure will move the throttle toward closed position, but when said pressure increases beyond that reduced pressure, said pressure responsive means will move the throttle in an opening direction, a throttle stop mounted on said throttle shaft for swinging movement relative thereto and actuated by said pressure responsive means, and means carried by said throttle shaft and adapted to engage said stop to limit throttle movement in a closing direction.

13. In engine fuel feeding apparatus including a suction passage having an air inlet and an outlet, a throttle and a throttle actuating shaft; the combination comprising, a pressure responsive means including a spring tending to maintain said throttle in partially open position, means communicating to said pressure responsive means the suction passage pressure at the outlet side of the throttle, whereby a predetermined reduction in said pressure will compress said spring and move the throttle toward closed position, but when said pressure increases beyond that reduced pressure, said spring will move the throttle in an opening direction, an arm pivotally mounted intermediate its ends on said throttle shaft, a throttle stop on said arm, means carried by said throttle shaft and adapted to engage said stop to limit throttle movement in a closing direction, and means connecting said arm with said pressure responsive means.

EDWARD A. WINFIELD.