No. 606,684. Patented July 5, 1898.

F. RHIND.

ACETYLENE GAS GENERATING LAMP.

(Application filed Sept. 10, 1897.)

(No Model.)

Fig. II

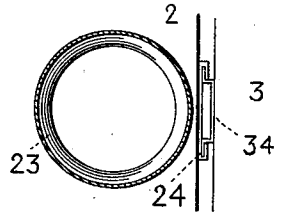

Fig. I

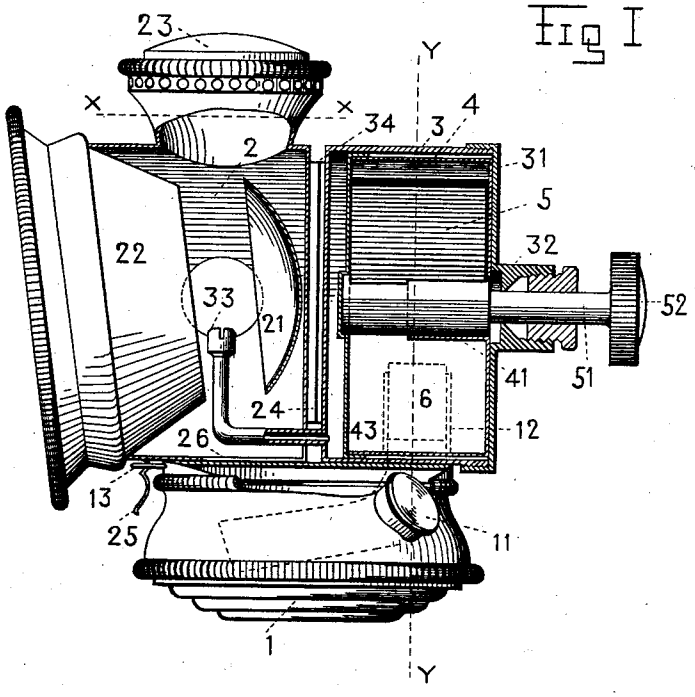

Fig. III

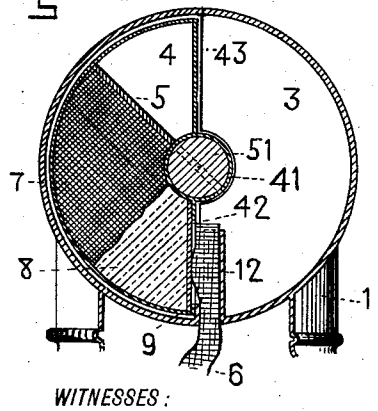

Fig. IV

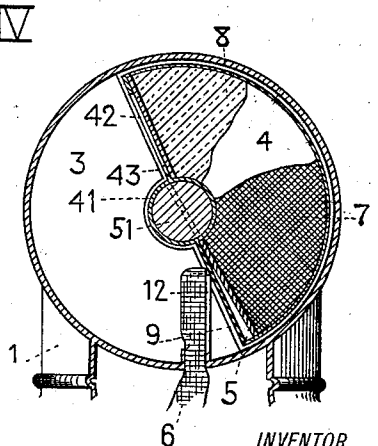

WITNESSES:

James R. Cox

E. W. Todd

INVENTOR

Frank Rhind

BY

Geo. L. Cosper

ATTORNEY.

THE NORRIS PETERS CO., PHOTO-LITHO., WASHINGTON, D. C.

UNITED STATES PATENT OFFICE.

FRANK RHIND, OF BRIDGEPORT, CONNECTICUT, ASSIGNOR TO THE BRIDGEPORT BRASS COMPANY, OF SAME PLACE.

ACETYLENE-GAS-GENERATING LAMP.

SPECIFICATION forming part of Letters Patent No. 606,684, dated July 5, 1898.

Application filed September 10, 1897. Serial No. 651,193. (No model.)

To all whom it may concern:

Be it known that I, FRANK RHIND, a citizen of the United States, residing at Bridgeport, Connecticut, have invented a new and useful Improvement in Gas-Generating Lamps, of which the following is a specification.

My invention relates to that class of gas-generating lamps in which a gas is evolved by the action of a liquid, as water, on a solid, as calcium carbid. It is intended to improve such lamps in the direction of simplicity and safety, and particularly to provide means for cutting off the generation of gas at any desired moment.

In the accompanying drawings, Figure I, partly in elevation and partly in vertical section, represents a lamp embodying my invention. Figs. II and III are sections through the lines *x x* and *y y*, Fig. I, respectively. Fig. IV is a view similar to that of Fig. III, showing a different position of the parts.

1 designates a fount provided with filler-opening 11, wick-tube 12, and catch 13; 2, a combustion-chamber provided with reflectors 21 22, cowl 23, slide 24, snap 25, and slot 26; 3, a gas-generator fitted with cap 31, stuffing-box 32, gas-outlet 33, and slide 34; 4, a solid-containing chamber or box formed with hub 41, aperture 42, and cap 43; 5, a blade or partition mounted on a shaft 51, which is provided with a thumb wheel or button 52; 6, a wick; 7, a mass of gas-evolving solid; 8, a mass of the residual product; 9, a pervious closure.

The example of my invention shown in the drawings represents a bicycle lamp or lantern; but it will be obvious that my device is applicable to lamps of many forms and adapted to a variety of uses.

The fount 1, filler 11, wick-tube 12, combustion-chamber 2, reflectors 21 22, and cowl 23 may be of any desired form. The gas-generator 3 is shown as a horizontal cylinder secured to the fount 1. The wick-tube 12 extends up into the holder 3 and is preferably cut away at one side, as shown in Figs. III and IV. The generator 3 is closed by a cap 31, provided with an axially-placed stuffing-box 32. A gas-outlet 33, shown as a bent tube provided with a suitable burner-tip, extends from the generator 3 into the chamber 2. Within the holder 3 is a solid-containing chamber or box 4, shown as of substantially semicylindric form and provided with a hub by which it is loosely mounted on a shaft 5. It is provided with a tubular hub 41 of less length than the height of the cylinder. A portion of one of its radial walls is cut away at 42, and the box is closed by a tightly-fitting cap 43. Within the box 4 is a radial blade 5, secured to a shaft 51, preferably by engagement in a slot cut in the shaft. The shaft 51 passes through the hub 41 and is preferably reduced in size to pass the stuffing-box 32 and is provided at its outer free end with a thumb wheel or button 52. A wick 6 is shown in the wick-tube 12. Any suitable and well-known means may be used to raise and lower the wick 6, so as to regulate its capillary action; but as this forms no part of my present invention I have not encumbered the drawings therewith. A portion of solid material 7, as calcium carbid, and a mass of the residual product 8, as hydrated lime, are shown in the box 4. A pervious closure 9, as a piece of felt or the like, closes the opening 42 in the box 4. Slide members 24 and 34, adapted to mutual engagement, permit the vertical removal and replacement of the chamber 2 from and on the generator 3, the chamber 2 being slotted at 26 to pass the tube 33. A snap 25 on the chamber 2 engages with the catch 13 on the fount 1 when the parts are assembled for use.

I will without prejudice describe the operation of my device as applied to the generation and consumption of acetylene gas. The solid-containing chamber or box 4 is removed from the gas-generator 3 by first unscrewing the cap 31. The cap 43 of the box 4 being then removed, the box is partly—*e. g.*, two-thirds—filled with calcium carbid 7. A porous closure 9, which may be of fine wire-gauze, felt, or textile material, is used to cover the aperture 42 in the radial wall of the box 4, and the carbid 7 is placed between this closure and the rotary blade 5. The parts are then assembled, as shown in the drawings, and the fount 1 filled with water through the filler 11. The operator then, by means of the button 52, turns the radial blade 5 so as, first, to compact the comminuted carbid 7 against the closure

9, and, second, to rotate the box 4 to the position shown in Fig. 3, in which the closure bears against the exposed side of the wick 6. Acetylene gas is immediately evolved and passes through the tube 33 to the burner-tip. It is found in practice that the resultant lime formed, as shown at 8 in Fig. III, is of such high capillarity as not to interfere with the flow of water to the remaining carbid 7, and that with the low fount 1 shown, and particularly with the agitation of the lamp caused by the motion of the cycle, the supply of liquid will be so constant as not to require regulation. As already suggested, in a type of lamp requiring it any suitable means of increasing or diminishing the flow may be supplied.

If, as is usually the case, it is desired to extinguish the flame before the charge of carbid is consumed, it is only necessary to turn the button 52 in a direction opposite to that above described. This first brings the blade 5 against the solid radial wall of the box 4 and then rotates the box to the substantially-inverted position shown in Fig. IV. The residual hydrated lime 8, being compacted by its own expansion into a hard cake firmly wedged between the walls of the box 4, remains *in situ*, as clearly shown in Fig. IV, while the loose grains of carbid fall to the bottom of the box. Thus the contact between the carbid 7 and the wet lime 8 is immediately broken, and the evolution of gas ceases at once. If left in contact, the water in the lime is sufficient in a lamp of the dimensions shown to maintain a slowly-diminishing production of gas for one or more hours.

I have shown the chamber 2 removably connected to the generator 3 by sliding members or flanges 24 and 34 and held in place by catch portions 25 and 13. This method of construction greatly reduces convection of heat from one part to another besides conveniencing the cleaning of the burner-tip or the reflecting-surfaces.

I am aware that my device will necessarily be modified in form in adapting it to lamps of different types and that many mechanical alterations may be made without departing from my invention.

What I claim as my invention, and desire to secure by Letters Patent of the United States, is as follows:

1. In a gas-generating lamp in combination a liquid-containing chamber, a gas-generator and an invertible solid-containing chamber in said generator, substantially as described.

2. In a gas-generating lamp in combination a liquid-containing chamber, a gas-generator and a rotatable solid-containing chamber substantially segmental in cross-section in said generator, substantially as described.

3. In a gas-generating lamp in combination a liquid-containing chamber, a gas-generator, a rotatable solid-containing chamber in said generator and a separately rotatable blade or partition in said solid-containing chamber, substantially as described.

4. In a gas-generating lamp in combination a liquid-containing chamber, a gas-generator, a rotatable solid-containing chamber in said generator, a hub in said solid-containing chamber, a bearing in said generator, a rotatable shaft passing through said hub and said bearing and a blade or partition on said shaft within said solid-containing chamber, substantially as described.

5. In a gas-generating lamp in combination a liquid-containing chamber, a wick extending from said chamber, a gas-generator, an invertible solid-containing chamber and means for bringing said chamber into and out of contact with said wick, substantially as described.

6. In a gas-generating lamp in combination a liquid-containing chamber, a wick extending from said chamber, a gas-generator, an invertible solid-containing chamber and a movable blade or partition in said solid-containing chamber, substantially as described.

7. In a gas-generating lamp in combination a liquid-containing chamber, a gas-generator adjacent thereto, a wick-tube extending from said liquid-containing chamber into said generator and a rotatable solid-containing chamber in said generator adapted to be moved into and out of contact with said wick, substantially as described.

8. In a gas-generating lamp in combination a liquid-containing chamber, a gas-generator adjacent thereto, a wick-tube extending from said liquid-containing chamber into said generator, a rotatable solid-containing chamber in said generator, a separately rotatable blade or partition in said solid-containing chamber and integral means for rotating said blade and said solid-containing chamber, substantially as described.

FRANK RHIND.

Witnesses:
GEO. L. COOPER,
LOUIS F. GOFF.

Correction in Letters Patent No. 606,684.

It is hereby certified that Letters Patent No. 606,684, granted July 5, 1898, upon the application of Frank Rhind, of Bridgeport, Connecticut, for an improvement in "Acetylene-Gas-Generating Lamps," was erroneously issued to The Bridgeport Brass Company, as owner of the entire interest in said invention; that said Letters Patent should have been issued to the inventor, *Frank Rhind and The Bridgeport Brass Company*, jointly, said The Bridgeport Brass Company being the assignee of one-half interest only in said patent, as shown by the record of assignments in this office; and that the said Letters Patent should be read with this correction therein that the same may conform to the record of the case in the Patent Office.

Signed, countersigned, and sealed this 19th day of July, A. D., 1898.

[SEAL.]

WEBSTER DAVIS,
Assistant Secretary of the Interior.

Countersigned:

A. P. GREELEY,
Acting Commissioner of Patents.