Oct. 26, 1948. A. NEWHOUSE 2,452,483

ROTARY PRESSING MACHINE FOR CONTINUOUS PRESSING OPERATIONS

Filed Aug. 1, 1946

Fig. 1

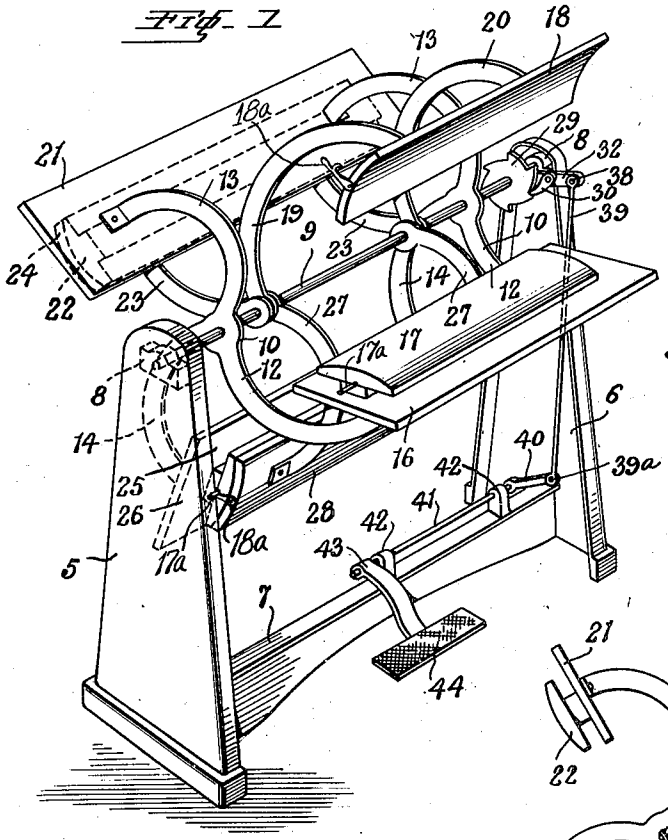

Fig. 4

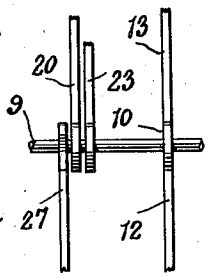

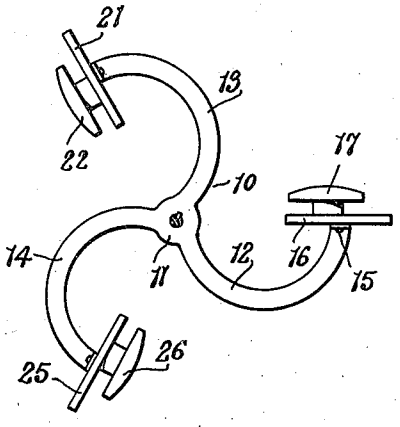

Fig. 3

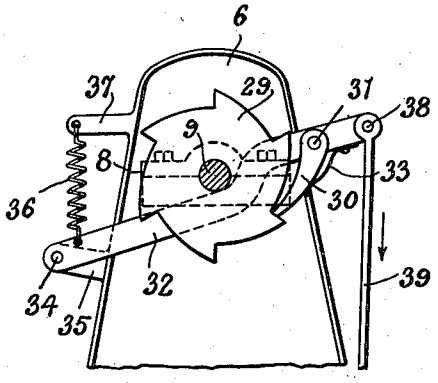

Fig. 2

INVENTOR.
ABE NEWHOUSE
BY Leon M. Strauss
ATT.

Patented Oct. 26, 1948 2,452,483

UNITED STATES PATENT OFFICE

2,452,483

ROTARY PRESSING MACHINE FOR CONTINUOUS PRESSING OPERATIONS

Abe Newhouse, Brooklyn, N. Y.

Application August 1, 1946, Serial No. 687,667

3 Claims. (Cl. 38—22)

1

This invention relates to pressing machines for clothing, fabrics and like articles.

It is one of the primary objects of the invention to provide means permitting pressing operations of a number of articles in rapid succession.

Another object of the invention is to provide means affording the arrangement of a number of pressing instrumentalities or bucks for rotative movement and their successive positionings before the operator so that articles of clothing may be disposed one after another on the bucks, as the latter are brought successively to operative position to receive each time one of said articles.

The invention further contemplates the provision of a plurality of pressing bucks or like devices radially extending from and carried by a shaft, and of means for moving said shaft intermittently to thereby position one device after another before the machine operator, so that substantially continuous pressing operations may be brought about.

Still another object of the invention is to provide means facilitating simplified construction of pressing machines, readily accessible and well arranged parts of such machines and easy and speedy pressing operations.

Yet, a further object of this invention is to provide means affording a very efficient pressing machine structure which will save space and the operation of which will be economical and semi-automatic.

With the above and other objects in view, the invention will be hereinafter more particularly described and the combination and arrangement of parts will be shown in the accompanying drawing and pointed out in the claims which form part of the specification.

Reference will now be had to the drawing wherein like numerals of reference designate corresponding parts throughout the several views, in which:

Fig. 1 is a perspective view of a pressing machine made in accordance with the invention.

Fig. 2 is a sectional view through the main shaft of the machine, illustrating the ratchet mechanism for rotating said shaft.

Fig. 3 is a sectional view through the main shaft showing one of the spiders which supports the several bucks.

Fig. 4 is a front elevation of the shaft with portions of buck-supporting arms extending radially from said shaft.

Referring now more particularly to the drawing, 5 indicates one of the end frames of the pressing machine and 6 a similar frame at the

2

opposite end of said machine. These frame members 5 and 6 are connected by a cross member 7 at their lower and wider ends and they may, if desired, be otherwise strengthened and reinforced to result in a sturdy supporting structure.

Each of these frames is provided near the upper ends thereof with suitable bearings 8, said bearings rotatively receiving the main shaft 9 of the machine. Keyed on the shaft 9 is a plurality of spiders 10, one of which is shown in Fig. 3. Each spider consists of a central hub portion 11 from which three arms or brackets, indicated respectively at 12, 13 and 14 project radially, these arms or brackets being curved substantially as shown. In the embodiment of the invention disclosed, two of the spiders support the three bucks with which the machine is provided. For example, the arms 12 of two of the spiders are secured, as at 15, to a table or base plate 16 on which a lower or so called "fixed" buck 17 is mounted.

For cooperation with the lower buck 17 an upper or movable (swingable) buck 18 is provided, the same being attached at the ends of two curved arms 19 and 20 which are loosely supported on the shaft 9, thus permitting the upper buck 18 to be swung downwardly by manual operation, to then rest against the lower buck 17 and thereby press a garment placed between the two bucks 17 and 18. Locking latch parts 17a, 18a are provided to prevent buck 18 from swinging away from buck 17 in closed and pressing or operating position of bucks 17 and 18 (see bucks 26, 28 of Fig. 1).

The arms 13 on the two spiders 10 are secured to a base plate 21 carrying a lower buck 22. Loosely mounted on the shaft 9 are two arms 23 which carry the upper movable buck 24 adapted to be brought into operative contact with the lower buck 22.

Similarly, the arms 14 on the two spiders 10 carry a base plate 25 on which a lower buck 26 is mounted. Two arms 27, loosely mounted on the shaft 9, carry an upper buck 28 adapted to be swung into engagement with the buck 26 to perform the pressing operation. Each of said "fixed" bucks 17, 22, 26 extends in a plane radially directed to said common shaft 9.

Secured on the shaft 9 adjacent one of its ends, is a ratchet wheel 29, engaged by a pawl 30, pivotally mounted at 31 on a lever 32, said pawl being held in engagement with the ratchet by means of the leaf spring 33. At one of its ends, the lever 32 is pivoted at 34 in a lug 35 formed on or extending from the frame member 6, said lever 32, being normally urged upwardly

by the pull of a coil spring 36 having one end attached to the lever 32 and its other end attached to a lug 37 projecting from the frame member 6. At its opposite end, the lever 32 is pivoted at 38 to the upper end of a rod 39, which has its lower end pivoted at 39a to the end of an arm 40 extending radially from a shaft 41 rotatively mounted in the bearings 42 fixed to the top of the cross member 7 of the frame of the machine. Secured on the shaft 41 and extending radially therefrom is a pedal 43 terminating in the footplate 44.

From the foregoing, the operation of the machine will be readily understood. In Fig. 1 the buck 17 is located in operative position to receive an article of clothing, piece of fabric or other article to be pressed, the buck 17 being at this time, disposed substantially horizontally at the front of the machine and before the operator at the right height for him to conveniently place the article to be pressed upon it. When the article to be pressed has been arranged on the buck 17, the upper buck 18 is then swung down upon it and is held down by means of lever latch mechanism (17a, 18a) usually employed in pressing machines for the purpose of releasably retaining a movable or top buck on the lower buck.

When this has been done, the operator next proceeds to bring buck 22 into operative position, which is the position just now occupied by buck 17 which must then be swung downwardly and into subsequent position out of the way. This result is secured by the depression of the foot pedal 43, which, through the linkage and the pawl-and-ratchet mechanism heretofore described, will rotate shaft 9 to the required extent to cause arms 12, carrying buck 17 to swing downwardly and rearwardly, while arms 13 carrying buck 22 will be brought down to locate buck 22 horizontally and in front of the operator in position to receive the next article to be pressed. When the article is placed on buck 22, its companion buck 24 may be swung down against such article and held thereagainst. The pedal 43 is again depressed and then buck 22 is swung downwardly and rearwardly, carrying the article being pressed between the bucks 22 and 24.

Thus buck 26 is brought to horizontal position before the operator to receive the next article to be pressed.

By means of the structure described, it will be apparent that the pressing operations performed by the machine can be continuous. That is to say, while one article is being inserted between one pair of bucks, other articles will be being pressed between the other pairs of bucks on the machine, and as fast as one pressed article is removed, another can be inserted. The result is that the pressing output of a machine of this character will be substantial for any given period of operating time.

For simplicity in illustration, means by which steam or other heating means is conveyed to the bucks have been omitted, since such means can be of conventional character as known in the art.

It is to be noted that the tables 16, 21, 25 may be removably and interchangeably arranged on the spiders 10 of the machine.

It is of course understood that the bucks may have any desired shape to suit the purpose and outline of the clothes, blouses and the like, for which the pressing machine is designed to be employed.

It is further to be observed that for the mechanism for driving the main shaft 9 and advancing the battery of bucks 17, 22, 26 an electromotor with a timing device may be substituted so that the pressing machine functions semi-automatically and is not directly dependent on the supervision of the operator.

The machine can further be equipped with any known heat regulating means for furnishing to the respective bucks steam at different temperatures corresponding to the quality and area of the goods subjected to pressing treatments.

It can thus be seen that there has been provided in accordance with this invention a very efficient and economical pressing machine provided with a main shaft and with a plurality of bucks spaced apart from each other and carried by said shaft radially and means by which said shaft is rotated whereby said bucks may be successively brought to a predetermined position before an operator in front of said shaft, so that an article to be pressed may be loaded on one buck, while another article is steamed on another buck during the following rotation of the shaft, whereas a further article may be unloaded from a further buck upon completion of the rotation of said main shaft.

Since certain changes may be made in the above construction and different embodiments of the invention could be made without departing from the scope thereof, it is intended that all matter contained in the aforesaid specification or shown in the accompanying drawing shall be interpreted as illustrative and not in a limiting sense.

Having thus described the invention, what is claimed as new and desired to secure by Letters Patent, is:

1. In a pressing machine; a rotatable horizontal shaft, a plurality of fixed bucks, a plurality of movable bucks adapted to cooperate with said fixed bucks, respectively, said shaft forming a common support for said fixed bucks and said movable bucks, brackets fixed to and radially extending from said shaft, radial arms loosely mounted on said shaft, said fixed bucks being connected to said brackets, said movable bucks being arranged for operative pressing contact with said fixed bucks, respectively, and being carried by said loosely mounted arms, and means operatively connected to said shaft to rotate the latter to thereby bring said movable bucks and respective fixed bucks successively in position before an operator.

2. In a pressing machine; a rotatable horizontal shaft, a plurality of fixed bucks, a plurality of movable bucks adapted for pressing contact with said fixed bucks, respectively, said shaft forming a common support for said fixed bucks and said movable bucks, brackets supporting said fixed bucks and connected to said shaft, the plane in which each of said fixed bucks extends being radially directed to said shaft, said movable bucks being arranged for swinging movement adjacent said fixed bucks, and means operatively connected to said shaft to rotate the latter, to thereby bring said movable bucks and respective fixed bucks successively in position before an operator.

3. In a pressing machine; a rotatable horizontal shaft, a plurality of fixed bucks, a plurality of movable bucks adapted to cooperate with said fixed bucks, respectively, said shaft forming a common support for said fixed bucks and said movable bucks, arc-shaped brackets fixed to and radially extending from said shaft, arc-shaped

arms mounted for swinging movement on said shaft, said fixed bucks being connected to said brackets and extending in a plane radially directed to said shaft, said arc-shaped brackets extending in a direction opposite to that of said arc-shaped arms, said movable bucks being swingable for operative pressing contact with said fixed bucks, respectively, and being carried by said arms, and means operatively connected to said shaft to rotate the latter, to thereby bring said movable bucks and respective fixed bucks successively in position before an operator.

ABE NEWHOUSE.

REFERENCES CITED

The following references are of record in the file of this patent:

UNITED STATES PATENTS

Number	Name	Date
843,250	Zigler	Feb. 5, 1907
1,536,889	Kwiatkowski et al.	May 5, 1925
1,602,970	Fiskow	Oct. 12, 1926
1,668,501	Goldstein	May 1, 1928
1,889,041	Soule	Nov. 29, 1932
2,191,117	Page	Feb. 20, 1940
2,306,473	Strobridge	Dec. 29, 1942