April 8, 1969 F. T. GORSKI 3,437,508

STRUCTURAL PANEL AND METHOD OF PRODUCTION

Original Filed Sept. 28, 1966 Sheet 1 of 2

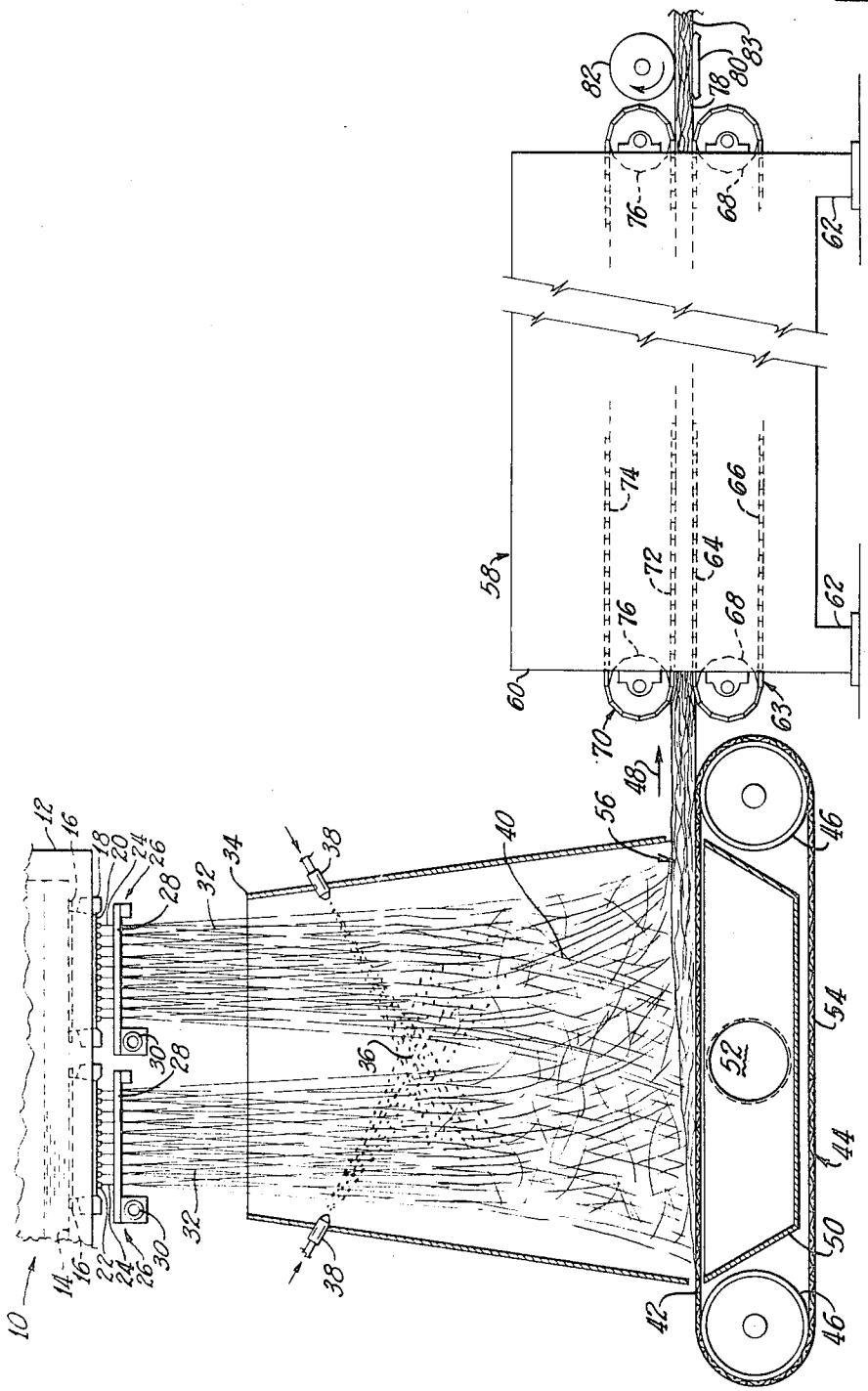


Fig. 1

INVENTOR.
FLORIAN T. GORSKI
BY Stachis & Oberman
ATTORNEYS

STRUCTURAL PANEL AND METHOD OF PRODUCTION

Original Filed Sept. 28, 1966



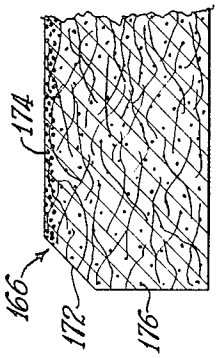


Fig. 5

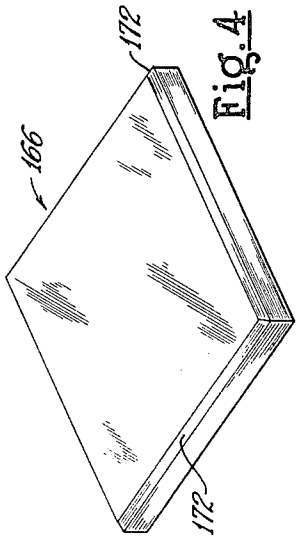


Fig. 4

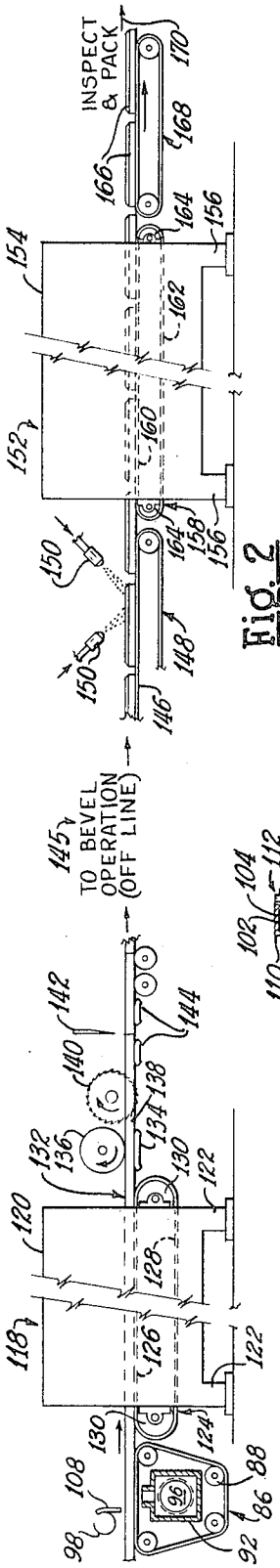


Fig. 2

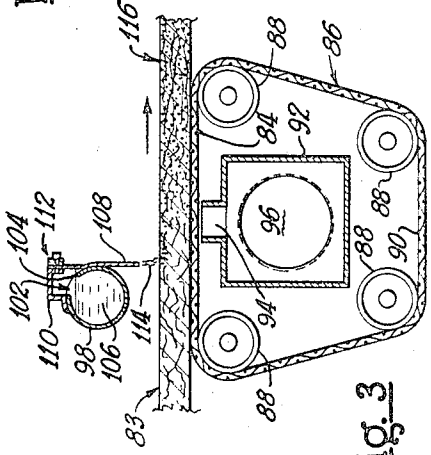


Fig. 3

INVENTOR.
FLORIAN T. GORSKI
BY
Stachin & Overman
ATTORNEYS

United States Patent Office

3,437,508

Patented Apr. 8, 1969

1

# 3,437,508
# STRUCTURAL PANEL AND METHOD OF PRODUCTION

Florian T. Gorski, Newark, Ohio, assignor to Owens-Corning Fiberglas Corporation, a corporation of Delaware

Continuation-in-part of application Ser. No. 204,920, June 25, 1962, and a continuation of application Ser. No. 589,158, Sept. 28, 1966. This application Aug. 23, 1967, Ser. No. 662,836

Int. Cl. B44d *1/20*

U.S. Cl. 117—54 9 Claims

## ABSTRACT OF THE DISCLOSURE

Method for improving the fiber surface smoothness and appearance of porous fibrous panels made of discontinuous glass fibers or the like, wherein the fibers are bonded to one another only at points of contact by hardened bonding material, with interstices between, which comprises, coating the surface fibers with additional liquid, hardenable material and then hardening the material in order to firm up or stiffen the surface fibers; and then dry grinding to remove fibers and thereby provide improved surface contour, while preserving the porosity of the panel. The product is a porous panel of improved surface finish and smoothness.

The invention overcomes prior art defects including offware due to indentations, stains and binder spots, light density spots, off-tolerance variations in thickness and weight, and poor bevels. Process efficiencies of 15–20% improvement over the prior art have been effected.

This application is a continuation-in-part of application Ser. No. 204,920 filed June 25, 1962, now abandoned and a continuation of Ser. No. 589,158, filed Sept. 28, 1966, now abandoned.

This invention relates to structural panels and to a method of production. More particularly, this invention relates to structural panels having improved surface finish, scuff resistance, and sharper and cleaner bevels giving improved appearance; and, to an improved method of higher efficiency for producing such structural panels. Further, this invention relates to structural panels adapted for use as ceiling or wall coverings.

In the prior art one popular structural panel comprises a high density board-like mat of glass fibers bonded with a relatively heavy content of thermosetting resin, such as phenol formaldehyde. The board is beveled at the edges and provided with a surface finish such as paint for pleasant appearance.

However, this prior product and method have been characterized by several defects including offware due to indentations, stains or binder spots, light density spots, off-tolerance variations in thickness and weight, and poor bevels.

The stains which appear on the product are of such nature that they are not capable of detection at the end of the production line before packaging and shipment. Thus, they show up only after storage as the result of a slow build-up.

Also, the prior product has been too soft for sharp bevels. Thus, a relatively broad or dull bevel has been necessary to reduce bevel break-outs and defects.

It has also been found that soft spots appear in the exposed surface of the prior product; these contribute to poor binder saturation and resultant stains or spots after storage.

The result is low production line efficiency because of rejects.

2

Accordingly, an important step forward in the art would be provided by an improved method of producing structural panels for ceilings or wall applications, having improved surface finish, better scuff resistance, finer bevels, and wherein the method provides efficiencies up to 25% greater than the prior art.

It is, accordingly, an important object of the present invention to provide an improved structural panel.

A further object is to provide an improved structural panel characterized by improved surface finish.

A still further object is to provide a novel structural panel of improved surface finish and high acoustical properties for use on ceilings or walls.

A still further object is to provide an improved structural panel characterized by sharper, cleaner bevels.

Another object is to provide a method for producing improved structural panels wherein production efficiencies up to 25% greater than the prior art are provided.

A still further object is to provide a method for producing acoustical panels for structural purposes, such as ceilings and walls, wherein a novel pre-finish treatment is used to improve the final finishing with greater production efficiencies.

Other objects of this invention will appear in the following description and appended claims, reference being had to the accompanying drawings forming part of this specification wherein like reference characters designate corresponding parts in the several views.

FIGURE 1 is a partial side elevational view of a production line for use in the present invention, showing the initial procedural steps;

FIGURE 2 is a continuation of FIGURE 1 showing the remaining procedural steps of the production operation;

FIGURE 3 is an enlarged fragmentary side elevational view showing one typical, but preferred, method of applying liquid binder for treating or saturating panels in accordance with the present invention;

FIGURE 4 is a perspective view of a panel made in accordance with the present invention; and,

FIGURE 5 is an enlarged fragmentary section view of a panel made according to the invention.

Before explaining the present invention in detail, it is to be understood that the invention is not limited in its application to the details of construction and arrangement of parts illustrated in the accompanying drawings, since the invention is capable of other embodiments and of being practiced or carried out in various ways. Also, it is to be understood that the phraseology or terminology employed herein is for the purpose of description and not of limitation.

### Perspective view

In accordance with the present invention, an improved acoustical panel of high density and made of glass fibers bonded by a thermosetting resin is provided wherein the surface finish is of higher quality and the bevels are sharper and cleaner for improved appearance.

Further, in accordance with an important aspect of the method of the invention, structural panels are formed from a high density glass fiber board that is partially impregnated with thermosetting resin to provide an improved surface for finishing by sanding, cutting, beveling and painting operations. By so operating, greatly improved production efficiencies are provided.

### Mat formation

According to FIGURE 1, staple glass fibers comprise a foundation component of the present products. These are made by forming a plurality of small streams of molten glass and attenuating the streams by means of a downwardly directed gas jet. The staple fibers so produced

fall downwardly and are drawn by suction to a movable chain to form a fibrous mat.

Thus, a glass melting furnace **10** is provided with an elongated delivery forehearth **12**, into the bottom wall **14** of which there are fitted one or more feeders or bushings **16**. The bushings **16** comprise precious metal and are made up of generally rectangular shoe-box-like walls and bottom, being open at the top to receive molten glass flowing from the furnace. To the end walls, there are attached electrical terminals **18** to which electrical connections are made for passing electric current the length of the feeders **16** to provide proper glass feeding temperatures.

The bottom walls **20** are provided with rows of spaced tips or small delivery tubes **22** through which small streams **24** of molten glass issue downwardly by gravity. Gas fiber-forming heads or attenuators **26** are positioned beneath each of the bushings **16** and comprise spaced, parallel headers **28** containing appropriate apertures, not shown, but of conventional construction, adapted to produce jet-like attenuation streams as of steam or compressed air, fed thereto from the manifold tubes **30**.

Thus, as the molten glass streams **24** issue downwardly through the attenuators **26**, the high speed jets of gas grip the streams and draw them out into very fine diameter fibers **32** of a length in the range from about one-fourth inch to about three inches.

A forming hood **34** is positioned beneath the fiber-forming heads **26** and directs the fibers **32** downwardly. During the downward fall of the fibers **32**, they are coated by sprays of aqueous thermosetting resin **36**, produced from sprayheads **38** positioned in suitable apertures in the forming hood **34**.

The coated fibers **40** fall downwardly through the forming hood **34** to the upper flight **31** of an endless collecting chain **44**. Chain **44** is supported by parallel and horizontally spaced rolls **46**, at least one of which is driven for moving the upper flight **42** in the arrow **48** direction.

A suction box **50**, having an outlet **52**, connected to a suitable exhaust fan or gas pump, is interposed between the upper flight **42** and lower flight **54** of chain **44** to draw the coated fibers **40** downwardly onto the upper flight **42**. This results in the formation of a loose mat **56** of gradually increasing thickness, achieving full thickness as or slightly before it exits from the forming hood **34** on upper flight **42**.

As shown in FIGURE 1, the loose mat **56** passes in the arrow **48** direction to a curing oven **58**, including an outer housing or shell **60** mounted on supports **62** and having a suitable heat source such as gas burners or electric radiants contained therein to generate a sufficient temperature for curing the resin deposited by the sprays **36** to a dry condition.

To support the mat **56** during movement through the oven **58**, there is provided a lower chain or conveyor **63** having upper and lower flights **64** and **66** and being mounted on axially aligned, horizontally disposed and spaced support rolls **68**. One or more of the support rolls **68** is power driven at a synchronized line speed for movement in the previously mentioned arrow **48** direction.

To control the thickness of the mat **56**, an upper conveyor or chain **70** is provided in parallel cooperative relationship above the lower conveyor **63**. The upper conveyor **70** includes a lower flight **72** and an upper flight **74** with support and moving power being provided by spaced rolls **76**. The lower flight **72** is spaced an appropriate distance from upper flight **64** of lower chain **63** to provide a proper mat production thickness.

From the foregoing, it will be observed that as the loose, uncured mat **56** travels through the oven **58**, it will emerge as a cured mat **78** from between the conveyors **63** and **70**. This basic cured mat **78** is of relatively high density, by virtue of high resin content and compaction of the fibers. The mat **78** is, however, quite porous.



Further processing of the raw mat—initial sanding

As shown at the right end of FIGURE 1, the cured mat **78** passes between a support table **80** and a first dry sanding roll **82**. The sanding roll **82** is effective to smooth the top surface of the cured mat **78**, removing surface irregularities such as flight marks made by the chain **70**, to produce an initially sanded board or mat **83**.

Saturating impregnation

Following the initial sanding operation effected by roll **82**, the sanded mat **83** passes to the upper flight **84** of a chain **86**, supported on rolls **88**, one or more of which is driven to drive the upper flight in synchronism with the remainder of the production line. Note the enlarged view of FIGURE 3 for details.

Between the upper flight **84** and the lower flight **90** there is provided a suction box **92** having a narrow inlet opening **94** for appropriate suction, and an outlet opening **96**, connected to a conduit leading to a suitable fan or other gas pump.

An important aspect of the present invention resides in the application, by impregnation, of a second coat of resin prior to further processing. It is important that the coating of binder applied to the surface after the initial sanding be drawn into the board for very uniform distribution and fiber support. It will thus be apparent that the mat **83** is quite porous.

Accordingly, as shown at the left of FIGURE 2 and in greater detail in FIGURE 3, an elongated conduit **98** is positioned above the cured and sanded mat **83**, spanning the width of the mat. The weir or conduit **98** is provided at the top with a flow slot **102** having a lower delivery edge **104** over which a liquid resin composition **106** can flow by gravity. In order to provide a sufficiently uniform distribution across the width of the mat, a foraminous material **108** such as screen, woven glass cloth or the like is provided to produce a uniform coating of downwardly flowing liquid material. To support the foraminous material **108**, a bracket **110** is connected along the top of the conduit **98**, spanning the slot **102**, and providing a clamp portion at **112** above and adjacent to the delivery edge **104**. One of the longitudinal edges of the rectangular foraminous member **108** is clamped at **112** so that the remainder of the member **108** falls into contacting relationship with the side of the conduit **98** below and adjacent to the delivery edge **104** to catch the overrunning liquid material **106** from the delivery edge **104** and distribute it as a uniform curtain **114**, dropping downwardly onto the upper surface of board **83**.

Note that the curtain **114** deposits on the upper surface of the board **83** slightly to the left of the suction throat **94** of the suction box **92**. Thus, as the mat or board **83** passes over the inlet throat **94**, the reduced pressure causes the material **114** to be drawn or driven uniformly into the mat, thus providing an impregnated mat **116**.

The impregnated mat **116** passes to a second curing oven **118** that includes an outer shell **120**, supported as at **122**. As distinguished from the oven **58**, previously described, which included both an upper conveyor **70** and a lower conveyor **63**, the second oven **118** includes only a lower conveyor **124** to support the impregnated board **116**. Thus, due to the fact that the board **116** has already received a tolerable thickness by the upper conveyor **70** of oven **58**, such equipment is not necessary at this point. Accordingly, the impregnated board **116** enters the oven **118** and is carried on the upper flight **126** of conveyor **124**. The conveyor **124** is carried by spaced support rolls **130**, at least one of which is power driven in synchronization with the production line.

Suitable heating means is provided in the oven **118** to cure the impregnated board **116** to bone-dry state, designated **132**.

Finishing

As shown in FIGURE 2, the cured and dry board **132** passes to a final sanding operation, wherein a backing table **134** cooperates with a sanding roll **136**. The roll **136** is effective to reduce the thickness of the dry mat **132** to finished dimension.

From the sanding operation **136**, **134**, the finish sanded board **138** passes to one or more appropriate slitter saws **140**. Following the saw **140**, a knife **142**, cooperating with support tables **144**, finishes the cutting operation to provide panels of appropriate rectangular or square dimension.

From the knife **142**, the blanks are beveled manually in an off-line bevel operation as at **145** and then returned to the upper flight **146** of a conveyor **148**. While on the flight **146**, the beveled panels pass beneath sprayheads **150** for application of paint, after which they pass through a drying oven **152**. The oven **152** includes a housing **154** supported at **156** and containing heating means such as gas or electrically powered elements. A conveyor **158** spans the housing **154** and has upper and lower flights **160** and **162** supported on rolls **164** driven at production line speed. After emerging from oven **152**, the finished blocks **166** pass along an inspection conveyor **168** and then to a packaging station indicated by the arrow **170**.

Operation summary of the invention

From the foregoing description it will be noted that operation of the method of invention comprises an important step of applying a partial saturating or impregnating coating of resin to the cured and pre-sanded boards **83** and curing this impregnating resin to a dry state prior to finishing. By so operating, an improved base material is provided for the final grinding, beveling and application of a surface finish paint. Thus, the production of finished panels of unexpectedly superior surface finish is effected.

It is an important and unexpected aspect of the present invention that in contrast to analogous prior products, the bevels are shaper, cleaner and shorter, and are produced without damage, as was the experience of the prior art.

Finished panels of invention

By reference to FIGURE 4, it will be noted that the finished blocks **166** may be of generally square configuration in plan and are characterized by short, sharp, clean 45° bevels **172**. As pointed out above, these bevels are possible in the present product by virtue of the improved internal structure and density of "body" of the boards from which made, and thus can be formed without break-outs at a high production rate. In order to avoid broken and crumbled edges, the prior art method required that the bevels be more flattened, thus of a 30° configuration, rather than a sharp, short 45° configuration provided by the present invention. Even by so operating, due to the relatively poor "body" of the prior products, rejects were relatively high because of beveling fractures.

Thus, it will be evident that improved structures of higher density, sharper contour lines and improved surface finish and appearance are provided in accordance with the present invention.

Extended scope of invention

While the foregoing disclosure has related to the use of a liquid impregnating composition containing phenol formaldehyde resin, this material is subject to some latitude of use within the broader scope of invention. Thus, both aqueous and alcoholic materials can be used. Because of the volatile nature of alcohol and the hazards of handling, water will generally be preferred. However, it has been found that the alcoholic resin when applied to the boards before painting, will tie down potential resin stains and prevent their showing through the final paint.

Within the broad scope of the invention, the saturating resin may be extended to other materials such as melamine-formaldehyde, urea-formaldehyde and similar thermosetting resins.



Use of fillers for production of wall panels

In an extension of the invention, fillers such as powdered bentonite, clays, chalk, silica and the like can be added to the impregnating resin for application to the boards, as shown at the left side of FIGURE 2 and in FIGURE 3. By so operating, products having superior scuff and abrasion resistance for wall panel application can be made. Such materials are harder and more resilient, but they also retain a substantial amount of acoustical efficiency for overall sound improvement.

An enlarged cross sectional view of such a product is provided by FIGURE 5 wherein it will be noted that the filler particles **174** have deposited in the upper layers of the fibers for surface support and greater resistance against impact. The resin is shown as dots **176** of lesser density that have been distributed generally uniformly through the remainder of the board.

When operating in accordance with this embodiment of the invention, it is believed that the high density of the board acts as a type of filter for the filler. Thus, the filler appears to be captured and retained in the upper layers while the binder penetrates more deeply. This will provide an excellent base for grinding and for subsequent finish application.

Paints useful for finishing in accordance with the present invention include the synthetic rubber base materials, the caseins, oils and the like. It has been found that the latex-type materials are easily applied and sufficiently economical that their use may be favored.

While the curtain coater **108** has been discussed with reference to the saturation of the boards **83**, it is to be understood that application of the saturating curtain **114** also can be made by spray guns or rollers. However, when so operating, adjustment of the applicator to provide a uniform distribution throughout the mat is required and is coordinated with the action of the suction box **92**.

The single sanding modification

The extended scope of invention would also encompass application of the saturating binder as by the foraminous screen **108** prior to entry of the loose, uncured mat into the oven **58**. By so operating, the sanding can be entirely effected by the first sanding roll **82**, the second roll **136** not being used. For certain types of products this will provide still greater economy of operation, although optimum properties are not provided as in the double sanding operation previously described.

Although glass fibers are preferred in the present invention, some latitude may be tolerated as where long, staple, relatively nonbrashy fibers can be produced from other mineral materials. In addition to the use of gas attenuated fibers, as shown in FIGURE 1, the same type of glass fiber from other forming operations also can be used, as from spinning plate and flame attenuation processes.

Summary and advantages

From the foregoing description, it will be evident that superior products are provided in accordance with the present invention, characterized by sharper bevels and superior surface finish. Also a method giving substantially improved production line efficiencies is provided. In accordance with the invention, process efficiencies of 15–20% improvement over the prior art have been effected.

Another important advantage of the present invention resides in the fact that products of improved acoustical efficiency and scuff resistance are provided.

While I do not wish to be bound by any particular theory, it is believed that the saturation or impregnation in accordance with the invention provides an improved, more full-bodied surface, that is still porous, but that is

particularly effective for dry sanding to provide a finish receptive surface of superior performance.

Within the scope of the invention the term grinding can be construed to be actual fiber removal by either a sanding, grinding or abrading operation. This is clearly distinguishable from the teaching of the prior art relating to wet sanding for the mere removal of resin in the surface finishing of dense reinforced resin articles.

What is claimed is:

1. In a method of processing a stiff, porous, fibrous panel having an exposed, dry, fibrous, major surface and a porous, fibrous body section adjacent to said major surface, said panel consisting essentially of discontinuous, siliceous fibers in random array, bonded to one another at points of contact by hardened bonding material with interstices between the fibers, the steps of

removing fibrous material by dry grinding from said major surface to remove irregularities,

coating the so-treated surface with additional hardenable material in liquid form to partially impregnate the surface fibers, and preserving the porosity of the fibrous major surface and of the fibrous body section and moving the coating material at least partially into the body section, and hardening the additional material to dry condition,

and then removing additional fibrous material from said major surface by dry grinding to impart to the surface a uniform fibrous, finished contour.

2. In a method of processing a stiff, porous, fibrous panel having a dry, fibrous major surface and a porous, fibrous body section adjacent to said major surface, said panel consisting essentially of discontinuous, siliceous fibers bonded to one another at points of contact by hardened bonding material with interstices between the fibers, the steps of

coating the major surface with additional hardenable material in liquid form to partially impregnate the surface fibers, and preserving the porosity of the fibrous major surface and of the fibrous body section, and moving the coating material at least partially into the body section, and hardening the additional material to dry condition to render the surface stiffened,

and then removing fibrous material from said stiffened major surface by dry griding to remove fiber irregularities.

3. The product produced by the method of claim 2.

4. A method for imparting a finished surface of desired contour to a stiff porous body of glass fibers interbonded by a hardened binding agent comprising;



coating the surface with a hardenable material in liquid form, moving the coating material at least partially into the body region under said surface, and hardening the additional material to a dry condition to impart additional hardness to said surface,

and then mechanically working said surface in dry condition to remove material and impart to the surface a uniform fibrous finished contour.

5. The method of claim 4 wherein the coating material is moved into the porous fibrous body region under the surface by drawing the material therein under the influence of a differential in gas pressure across said body region.

6. The method of claim 4 wherein the mechanical working of said surface to remove material is accomplished by dry grinding said surface.

7. A method for processing a stiff porous fibrous body having a dry porous surface comprising glass fibers in random array interbonded one to another by a bonding material with interstices between the fibers comprising;

mechanically working said porous fibrous surface in dry condition to remove surface irregularities,

coating the mechanically worked surface with hardenable material in liquid form and moving the coating material at least partially into the body region under said surface, and hardening the additional material to a dry condition,

and then again mechanically working said surface in dry condition to remove additional material to impart to the surface a uniform fibrous finished contour.

8. The method of claim 7 wherein the coating material is moved into the fibrous body region under the surface by drawing the material therein under the influence of a differential in gas pressure across said body region.

9. The method of claim 7 wherein both steps of mechanical working of said surface to remove material are accomplished by dry grinding said surface.


**References Cited**

UNITED STATES PATENTS

| | | | |
|---|---|---|---|
| 2,583,024 | 1/1952 | Strabel | 117—64 |
| 3,050,427 | 8/1962 | Slayter et al. | 264—91 |



DONALL H. SYLVESTER, *Primary Examiner.*

ROBERT L. LINDSAY, *Assistant Examiner.*

U.S. Cl. X.R.

65—3, 4, 61; 117—64, 126; 156—375; 264—118, 128