Feb. 2, 1932. J. V. DONE 1,843,384

FURNACE WALL

Filed April 1, 1930 2 Sheets-Sheet 1

FIG. 1.

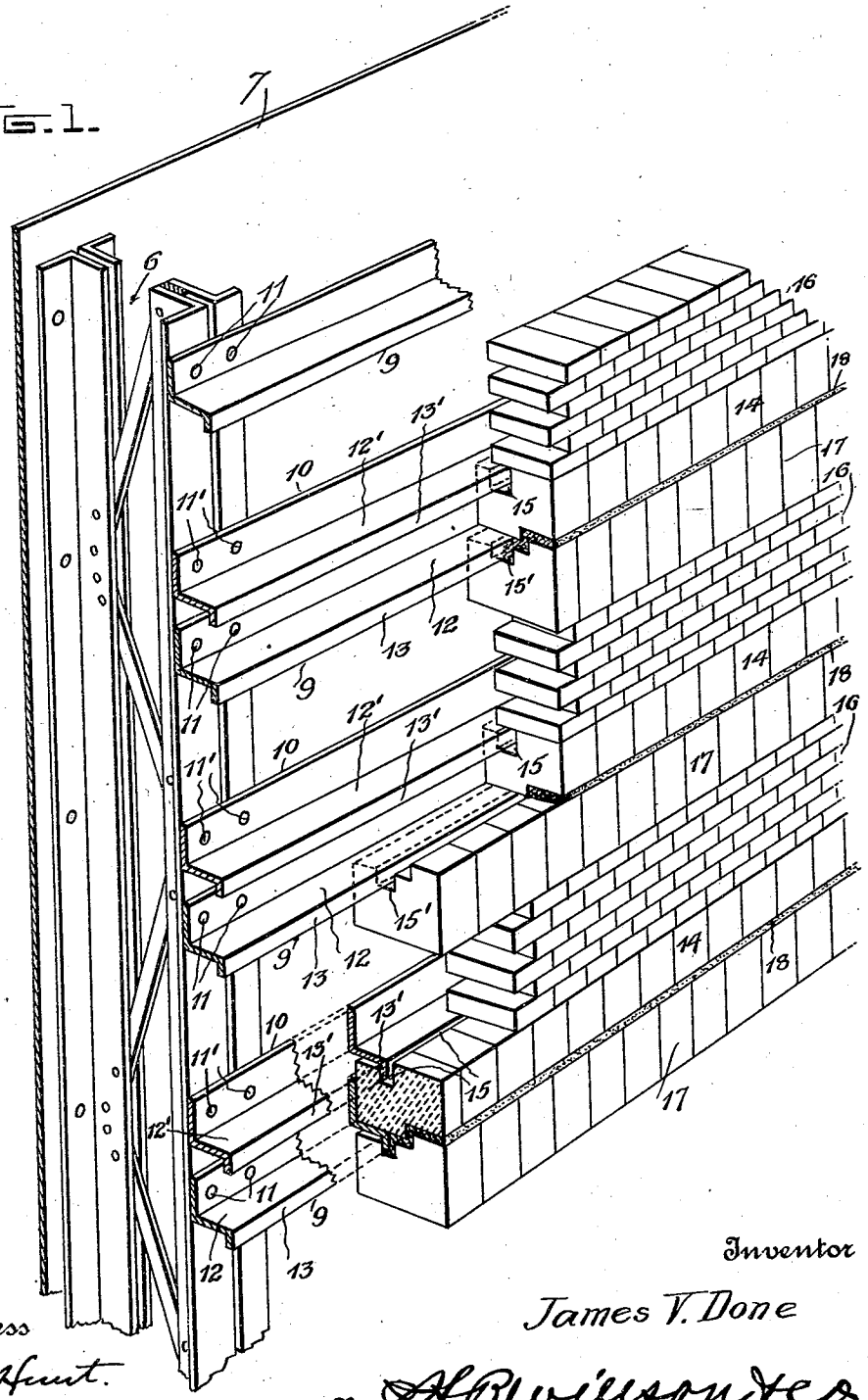

Witness

C. E. Hunt.

Inventor

James V. Done

By H. B. Willson & Co

Attorneys

Feb. 2, 1932. J. V. DONE 1,843,384

FURNACE WALL

Filed April 1, 1930 2 Sheets-Sheet 2

FIG. 2.

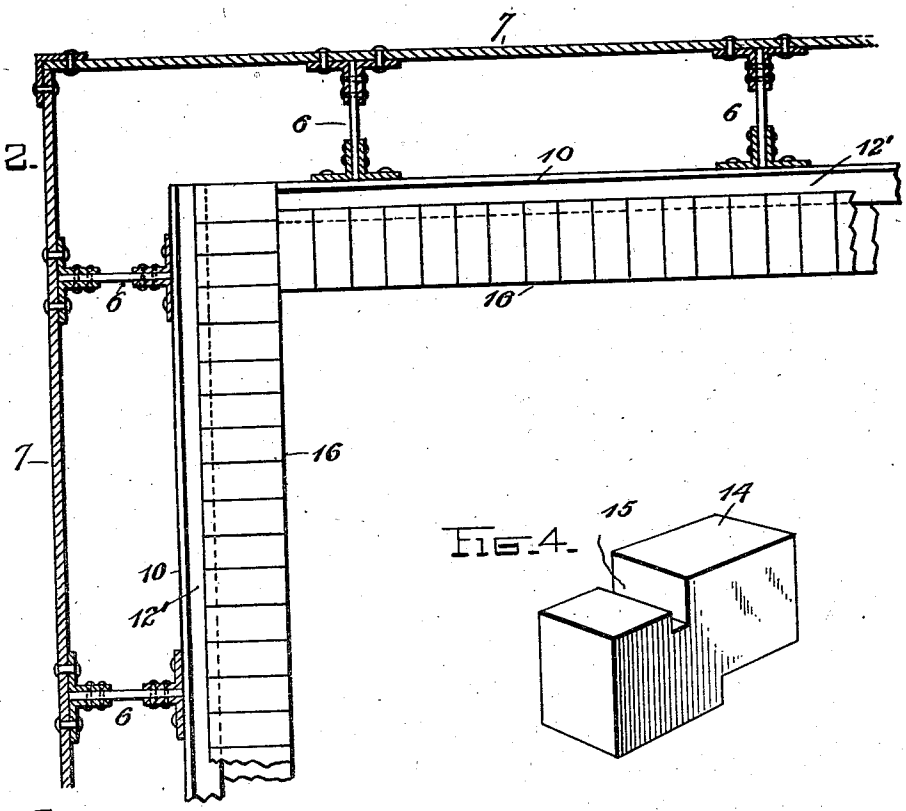

FIG. 4.

FIG. 3.

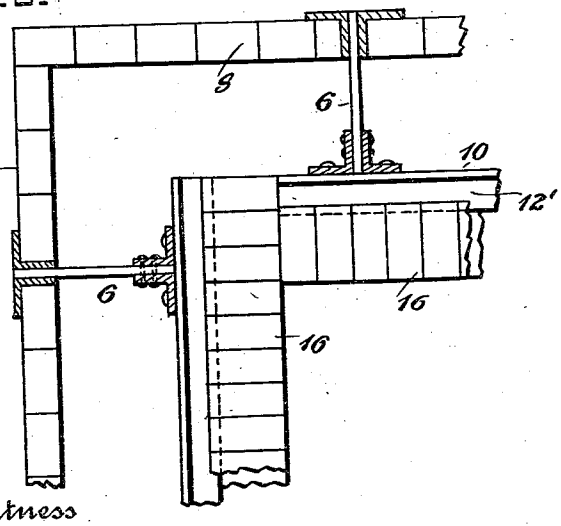

FIG. 5.

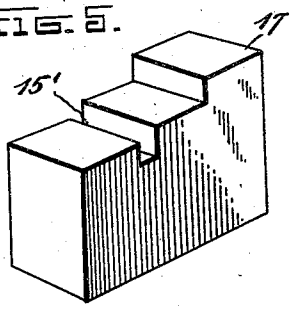

Inventor

James V. Done.

Witness

C. E. Hunt.

By H. B. Wilson & Co

Attorneys

Patented Feb. 2, 1932 1,843,384

UNITED STATES PATENT OFFICE

JAMES V. DONE, OF TULSA, OKLAHOMA

FURNACE WALL

Application filed April 1, 1930. Serial No. 440,763.

The invention relates to furnace and analogous walls in general and the present disclosure is directed to an air-cooled wall. Walls of this type usually embody inner and outer walls spaced apart to allow travel of air between them, and the present invention relates to the inner wall.

The object of the invention is to provide a wall construction which may be easily and economically constructed, will be durable and will readily allow repair, novel provision being made whereby any portion of the wall may be disassembled to remove injured blocks or bricks, without the necessity of molesting adjacent wall portions.

With the foregoing in view, the invention resides in the novel subject matter hereinafter described and claimed, description being accomplished by reference to the accompanying drawings.

Fig. 1 is a sectional perspective view with a number of the bricks and blocks omitted, a double wall construction being illustrated in this view, with the outer wall formed of sheet material.

Fig. 2 is a horizontal sectional view through a corner of a wall constructed in accordance with Fig. 1.

Fig. 3 is a view similar to Fig. 2 but illustrating the outer wall constructed from brick.

Fig. 4 is a perspective view of one of the base blocks.

Fig. 5 is a perspective view of one of the crown blocks.

In the drawings above briefly described, the numerals 6 denote a plurality of lattice columns to the outer edges of which an outer wall 7 of sheet material, or an outer wall 8 of brick or the like, may be secured. Secured to the inner edges of the columns 6, are a plurality of vertically spaced pairs of horizontal bars 9 and 10. Each bar 9 is of angle metal form and has its vertical flange portion secured by rivets or the like 11 to the columns 6, the base portion 12 of said bar 9 projecting horizontally away from said columns and being provided with a downwardly projecting longitudinal flange 13. Each bar 10 is secured by rivets or the like 11′ to the beams 6 in upwardly spaced relation with the subjacent bar 9, and said bar 10 embodies portions 12′ and 13′ which are identical with the portions 12 and 13 of the bar 9.

Each of the bars 9 supports a horizontal row of substantially rectangular, refractory, base blocks 14 having registering grooves 15 extending across their upper sides, near one end. The blocks 14 seat snugly in the angle of the bar 9 and their grooves 15 loosely receive the flange 13′ of the superposed key bar 10, but the shoulders formed by one side of said grooves 15, abut said flange 13′. When engaging the blocks 14 with the bars 9 and 10, said blocks are positioned one at a time so that they decline toward the space between the bars 9 and 10. The groove 15 of the block is then initially engaged with the flange 13′, and the block is canted from its inclined position to a horizontal position, whereupon it snugly seats in the angle of the bar 9 and its groove 15 becomes interlocked with the flange 13′.

Refractory brick-work 16 whose bricks are preferably of conventional form, is laid upon the base blocks 14 and the base flange 12′ of the bar 10 and refractory crown blocks 17 are laid upon said brick-work, said blocks 17 having registering grooves 15′ which are engaged with the flange 13 of the superposed bar 9, in the same manner as the grooves 15 are engaged with the flange 13′ of the key bar 10, one wall of each groove 15′ constituting a shoulder abutting said flange 13.

The space between any bar 9 and the subjacent bar 10, is filled with a row of the base blocks 14, the brick-work 16, and a row of the crown blocks 17, and as said base blocks are effectively interlocked with the adjacent bar 10 and said crown blocks are similarly interlocked with the superposed bar 9, these bars effectively key the upper and lower portions of the assemblage 14—16—17, in place.

Immediately over any row of crown blocks 17, is a row of the base blocks 14, and these blocks 14 and 17 are preferably stepped at their adjacent faces, as shown, and of such dimensions as to provide a space which may be filled with asbestos or the like 18, compensating for expansion and contraction.

By providing the novel construction shown and described, the wall may be easily, rapidly and inexpensively constructed, a large part of said wall being formed from conventional fire brick, instead of forming the wall in its entirety from specially constructed blocks, as is usually done. Hence, a great saving in cost of installation is effected and moreover, the wall may be more easily laid without skilled labor. Whenever any portion of the wall becomes damaged, this portion may be readily removed without disturbing adjacent portions, and new blocks or bricks substituted, allowing the quick and expeditious making of repairs.

The various details shown and described, are preferably followed. However, within the scope of the invention as claimed, numerous variations may be made, and it will be understood that although the wall formed by the parts 14, 16 and 17 and their securing means, herein constitutes an inner wall for a double-walled structure, it might well be used independently of an outer wall.

I claim:

1. In a furnace wall, a horizontal row of base blocks and a fixed horizontal angle metal bar in whose angle said blocks rest, said blocks having alined vertical shoulders at their upper sides facing away from the vertical flange of said angle metal bar, a fixed horizontal angle metal key bar whose base flange overlies said base blocks and is provided with a downwardly projecting longitudinal flange abutting said shoulders, brick-work resting upon said base blocks and said base flange of said key bar, a horizontal row of crown blocks resting upon said brick-work and having alined vertical shoulders corresponding to those aforesaid, and a second fixed horizontal key bar whose base flange overlies said crown blocks and is provided with a downwardly projecting longitudinal flange abutting said shoulders of said crown blocks.

2. In a furnace wall, a horizontal row of base blocks and a fixed horizontal angle metal bar in whose angle said blocks rest, the upper sides of said blocks having registering grooves, a fixed horizontal angle metal key bar whose base overlies said base blocks and is provided with a downwardly projecting longitudinal flange interlocked with said grooves, brick-work resting upon said base blocks and said base of said key bar, a horizontal row of crown blocks resting upon said brick-work and having registering grooves in their upper sides, and a second fixed horizontal angle metal key bar whose base overlies said crown blocks and is provided with a downwardly projecting longitudinal flange interlocked with the grooves of said crown blocks.

3. In a furnace wall, a fixed lower angle metal block-supporting bar, a fixed key bar above and parallel with said angle metal supporting bar, said key bar having downwardly projecting block-engaging rigid means, and a block adapted to seat in the angle of said angle metal bar, the upper side of said block having means adapted to interlock with said downwardly projecting rigid means only when the latter and the block-carried means are initially engaged and said block canted from an inclined position to a horizontal position.

4. In a furnace wall, a block-supporting frame-work embodying a pair of horizontal vertically spaced bars, the uppermost bar of said pair being provided with downwardly projecting rigid means adapted to interlock with wall blocks, the lower bar of said pair being of angular cross section to provide a seat for the blocks when the latter are initially engaged with said rigid means and canted from inclined to horizontal positions.

In testimony whereof I have hereunto affixed my signature.

JAMES V. DONE.