PCT WORLD INTELLECTUAL PROPERTY ORGANIZATION
International Bureau

INTERNATIONAL APPLICATION PUBLISHED UNDER THE PATENT COOPERATION TREATY (PCT)

(51) International Patent Classification 6 : H04Q 7/30, 7/34 | A2

(11) International Publication Number: **WO 95/35637**

(43) International Publication Date: 28 December 1995 (28.12.95)

(21) International Application Number: PCT/FI95/00350

(22) International Filing Date: 19 June 1995 (19.06.95)

(30) Priority Data:
942961 20 June 1994 (20.06.94) FI

(71) Applicants *(for all designated States except US)*: NOKIA TELECOMMUNICATIONS OY [FI/FI]; Mäkkylän puistotie 1, FIN-02600 Espoo (FI). NOKIA MOBILE PHONES LTD. [FI/FI]; Nakolankatu 8, FIN-24100 Salo (FI).

(72) Inventors; and

(75) Inventors/Applicants *(for US only)*: GLISIC, Savo [YU/FI]; Koulukatu 20 A 1, FIN-90100 Oulu (FI). KESKITALO, Ilkka [FI/FI]; Koskitie 5 A 8, FIN-90500 Oulu (FI). LEPPÄNEN, Pentti [FI/FI]; Haapakuja 11 B, FIN-90650 Oulu (FI). OJANPERÄ, Tero [FI/FI]; Tornipolku 16 A 8, FIN-90100 Oulu (FI). RAPELI, Juha [FI/FI]; Fyysikontie 4, FIN-90570 Oulu (FI). RIKKINEN, Kari [FI/FI]; Suotie 19 B 23, FIN-90650 Oulu (FI).

(74) Agent: TEKNOPOLIS KOLSTER OY; c/o Oy Kolster Ab, Iso Roobertinkatu 23, P.O. Box 148, FIN-00121 Helsinki (FI).

(81) Designated States: AU, CN, DE, GB, JP, NO, US, European patent (AT, BE, CH, DE, DK, ES, FR, GB, GR, IE, IT, LU, MC, NL, PT, SE).

Published
Without international search report and to be republished upon receipt of that report.

(54) Title: DATA TRANSMISSION METHOD, BASE STATION, AND SUBSCRIBER TERMINAL

(57) Abstract

A base station, subscriber terminal, and data transmission method in a CDMA cellular radio network having in each cell at least one base station (BTS) which communicates on a specified traffic channel with the terminal equipments (MS) located within its area, the signal of the users being divided in the method into bursts in the time domain. To achieve high traffic capacity together with high-quality connections, the base station (BTS) monitors the load state of the traffic channel in the data transmission method of the invention and transmits information about the load state of the traffic channel to the terminal equipments (MS). In the method, the number of the bursts transmitted between the terminal equipments and the base stations per time unit is controlled on the basis of the delay state of the bursts and the load state information computed at the base station.

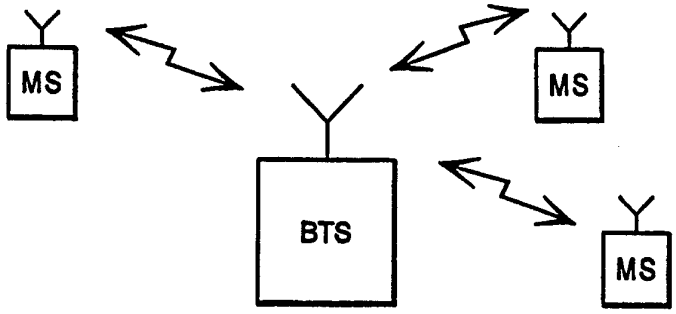

FOR THE PURPOSES OF INFORMATION ONLY

Codes used to identify States party to the PCT on the front pages of pamphlets publishing international applications under the PCT.

AT	Austria	**GB**	United Kingdom	**MR**	Mauritania
AU	Australia	**GE**	Georgia	**MW**	Malawi
BB	Barbados	**GN**	Guinea	**NE**	Niger
BE	Belgium	**GR**	Greece	**NL**	Netherlands
BF	Burkina Faso	**HU**	Hungary	**NO**	Norway
BG	Bulgaria	**IE**	Ireland	**NZ**	New Zealand
BJ	Benin	**IT**	Italy	**PL**	Poland
BR	Brazil	**JP**	Japan	**PT**	Portugal
BY	Belarus	**KE**	Kenya	**RO**	Romania
CA	Canada	**KG**	Kyrgystan	**RU**	Russian Federation
CF	Central African Republic	**KP**	Democratic People's Republic of Korea	**SD**	Sudan
CG	Congo			**SE**	Sweden
CH	Switzerland	**KR**	Republic of Korea	**SI**	Slovenia
CI	Côte d'Ivoire	**KZ**	Kazakhstan	**SK**	Slovakia
CM	Cameroon	**LI**	Liechtenstein	**SN**	Senegal
CN	China	**LK**	Sri Lanka	**TD**	Chad
CS	Czechoslovakia	**LU**	Luxembourg	**TG**	Togo
CZ	Czech Republic	**LV**	Latvia	**TJ**	Tajikistan
DE	Germany	**MC**	Monaco	**TT**	Trinidad and Tobago
DK	Denmark	**MD**	Republic of Moldova	**UA**	Ukraine
ES	Spain	**MG**	Madagascar	**US**	United States of America
FI	Finland	**ML**	Mali	**UZ**	Uzbekistan
FR	France	**MN**	Mongolia	**VN**	Viet Nam
GA	Gabon				

Data transmission method, base station, and subscriber terminal

The invention relates to a data transmission method in a CDMA cellular radio network having in each cell at least one base station which communicates on a specified traffic channel with the terminal equipments located within its area, the signal of the users being divided in the method into bursts in the time domain.

CDMA (Code Division Multiple Access) is a multiple access method based on a spread spectrum technique, and it has been recently put into use in cellular radio systems in addition to previously used FDMA (Frequency Division Multiple Access) and TDMA (Time Division Multiple Access). CDMA has many advantages over the prior methods, such as spectrum efficiency, simplicity of frequency planning, and traffic capacity.

In a CDMA method, a narrowband data signal of a user is multiplied to a relatively wide band of a traffic channel by a spreading code having a much wider band than the data signal. Traffic channel band widths used in known cellular network test systems include e.g. 1.25 MHz, 10 MHz and 25 MHz. The multiplication spreads the data signal over the entire band to be used. All the users transmit simultaneously in the same frequency band, i.e. traffic channel. A different spreading code is used on each connection between a base station and a subscriber terminal, and the signals of the users can be distinguished from one another in the receivers on the basis of the spreading code of the connection.

Correlators in conventional CDMA receivers synchronize with a desired signal, which they recognize on the basis of the spreading code contained in the signal. In the receiver the data signal is restored to the original band by multiplying it by the same spreading

code as in the transmission step. Ideally, the signals that have been multiplied by some other spreading code in the transmission step do not correlate with the spreading code used in the receiver and are thus not restored to the narrow band. In view of the desired signal, they thus appear as noise. If possible, the spreading codes of the system are selected in such a way that the codes in each cell of the system do not correlate with one another, i.e. they are mutually orthogonal.

'interference-restricted' system, in which the number of users is restricted by the amount of interference that they are allowed to cause to one another. Since in practice, the spreading codes of the users are not completely orthogonal, especially not as compared with the spreading codes used in the neighbouring cell, simultaneous users interfere with one another to some extent. This mutual interference is called multiple access interference. When the number of users increases, the interference they cause to one another increases also, and with a certain number of users the interference is so great as to weaken the quality of the connections. In the system, it is possible to define a level of interference that must not be exceeded, and thereby to limit the number of simultaneous users, i.e. the capacity of the system. The number, however, can be exceeded temporarily, i.e. some of the quality of the connection can be sacrificed to the capacity.

In a typical cellular network, the signals between a base station and a subscriber terminal propagate over various paths between the transmitter and the receiver. This multipath propagation is primarily due to the signal being reflected from the surrounding surfaces. The signals propagated over different paths arrive at the receiver at different times due to their different propagation delays. CDMA differs from the conventional FDMA and TDMA in that multipath propagation can be utilized in receiving the signal. The receiver generally used in CDMA is a RAKE receiver, which comprises one or more RAKE branches. Each branch is an independent receiver unit assembling and demodulating one received signal component. Each RAKE branch can be adjusted to synchronize with a signal component propagated over a different path, and in a conventional CDMA receiver, the signals of the receiver branches are

combined in an advantageous manner, e.g. coherently, to obtain a signal of good quality. Multipath propagation can be utilized in the receivers of both the base station and the terminal equipment. Where a terminal equipment is concerned, the signal components received by the receiver branches can be transmitted from one or - in macrodiversity - more base stations. The above type of CDMA systems utilizing multipath propagation are described in U.S. patents 5,101,501 and 5,109,390.

International patent application WO 92/00693, which is incorporated herein by reference, describes a CDMA system in which voice activity detection is used for increasing traffic capacity. It is well known that a speaker pauses not only between sentences and words, but within words also. A pause between words may last seconds, whereas a pause within a word lasts dozens of milliseconds only. The measuring results show that when a person speaks, he is actually making sounds for only 5/8 of the time, whereby the voice activity coefficient is 3/8. The voice activity coefficient is naturally dependent on the measuring accuracy, i.e. how short a pause can be distinguished.

The WO patent application teaches a system in which the signal transmitted by the user is divided into bursts in the time domain, the bursts being assembled in view of voice activity. No signal (i.e. bursts) to be transmitted is thus generated during pauses. A transmission from a user is thus not continuous signalling but comprises pauses, since when the speaker makes a pause, no bursts are transmitted. In a multiple user system, the number of users transmitting simultaneously thus varies continuously with the voice activity. If, for example, there are N calls in progress simultaneously and the voice activity is 3/8, it can be assumed

that 3/8 * N transmitters are in the transmission mode simultaneously.

In a prior art system, the number of simultaneous signals transmitted by the users varies with the voice activity. There are moments when the number of simultaneous transmissions is smaller than the capacity of the system, i.e. the channel is not used efficiently. Also, there are moments when the number of simultaneous transmissions is larger than the channel capacity. In the latter situation, the quality of the connection of the users, which can be measured e.g. by a bit error ratio, is worse than defined in the system.

The object of the present invention is to provide a system in which the number of simultaneous transmissions can be controlled accurately and maintained as close as possible to the optimum channel capacity to achieve high traffic capacity together with high quality connections.

This is achieved with a data transmission method of the type disclosed in the introduction, the method being characterized in that the base station monitors the load state of the traffic channel, and that the base station sends the terminal equipments information about the load state of the traffic channel, and that the number of the bursts to be transmitted between the terminal equipments and the base stations per time unit is controlled on the basis of the delay state of the bursts and the load state information computed at the base station.

The invention also relates to a data transmission method in a CDMA cellular radio network having in each cell at least one base station which communicates on a specified traffic channel with the terminal equipments located within its area, the signal of the users being divided in the method into bursts in the

time domain. The data transmission method of the invention is characterized in that the base station monitors the load state of the traffic channel, and that each burst sent to an individual terminal equipment with which the base station communicates is stored in its own buffer memory at the base station before the transmission, and that the number of the bursts transmitted by the base station to the terminal equipments per time unit depends on the number of the bursts stored in the buffer memories.

The invention also relates to a base station for use in a CDMA cellular radio network having in each cell at least one base station which communicates on a certain traffic channel with the terminal equipments located within its area, the base station comprising means for dividing the signal to be transmitted to the terminal equipments into bursts in the time domain. The base station of the invention is characterized in that the base station comprises means for monitoring the load of the traffic channel, means for transmitting information about the load state to the terminal equipments, means for storing the bursts in the buffer memory, and means for controlling the transmission of the bursts to the terminal equipments on the basis of the traffic channel capacity and the number of the bursts stored in the buffer memory.

The invention further relates to a subscriber terminal for use in a CDMA cellular radio network having in each cell at least one base station which communicates on a certain traffic channel with the terminal equipments located within its area, the terminal equipment comprising means for dividing the signal transmitted to the base station into bursts in the time domain. The terminal equipment of the invention is characterized by comprising means for controlling the

number of the bursts to be transmitted to the base station per time unit on the basis of the instantaneous traffic load of the traffic channel and the delay state of the bursts.

In the method of the invention, the base station thus monitors the load state of the traffic channel. The information about the load state is transmitted to the subscriber terminals, which utilize it in controlling the number of the signal bursts transmitted. By the method, the load of the channel can be maintained optimally close to the desired channel capacity, i.e. the traffic channel capacity can be utilized as well as possible without compromising on the quality of the connection.

In a preferred embodiment of the invention, the base station sends the terminal equipments information indicating whether the current channel load is lower than, equal to or higher than the channel capacity. The terminal equipments store the signal bursts to be transmitted in the buffer memory. The terminal equipments control the number of the bursts to be transmitted per time unit on the basis of the current number of bursts in the buffer memory, the delay state of these bursts, and the load state information transmitted from the base station. According to one preferred embodiment of the invention, the terminal equipments use a CSMA (Carrier Sense Multiple Access) protocol in the transmission of the bursts.

In the following the invention will be described in greater detail with reference to the examples illustrated in the attaching drawings, wherein

fig. 1 shows a cellular radio network in which the method of the invention can be applied,

fig. 2 is a scheme illustrating the operation of the method of the invention in a base station,

fig. 3 is a scheme illustrating the operation of the method of the invention in a subscriber terminal,

figures 4a and 4b illustrate a possible state of the buffer memory of a base station both before and after the transmission,

fig. 5 is a block diagram illustrating the structure of a base station according to the invention, and

fig. 6 is a block diagram illustrating the structure of a subscriber terminal according to the invention.

Fig. 1 shows a CDMA cellular network system in which the data transmission method of the invention can be applied. The cellular radio network comprises in each cell at least one base station (BTS) which communicates on a specified traffic channel with the terminal equipments (MS) located within its area. The traffic channel thus comprises a wide frequency band employed by all the terminal equipments in their transmissions to the base station; in the opposite direction of transmission, i.e. from the base station to the terminal equipments, there is a similar frequency band, in which the base station transmits data to the terminal equipments located within its area.

In the method of the invention, the load state of the traffic channel is monitored continuously, and on the basis of this information, the transmission in the subscriber terminals is controlled so that the load of the traffic channel is as close to the channel capacity as possible. Another parameter affecting the transmission is the delays of the bursts to be transmitted. The transmission of the bursts to the terminal equipments is controlled at the base station on the basis of the channel capacity and the burst generation.

The load state of the traffic channel is monitored at the base station. Fig. 2 is a scheme illustrating the operation of the method at the base station. The base station typically comprises N matched filters 20-23, each of which is synchronized to receive and demodulate N simultaneous signals from subscriber terminals. Let only n of the N terminal equipments be simultaneously active, i.e. transmit a signal to the base station. At the base station, the matched filters are followed by detectors 24-27, which detect at the output of the matched filters whether or not the output of the filter contains a received signal. The output of the detectors has the value '1' or '0' depending on whether or not the received signal appears at the output of the filter. Addition of the values in an adder 28 produces information about the number n of active transmissions.

In practice, the detection can be implemented e.g. by squaring the output signal of the matched filter and comparing the value with a threshold value obtained by using a CFAR (Constant False Alarm Rate) algorithm. The number of peaks detected at the outputs of the matched filters during a bit interval corresponds to the number n of packets transmitted on a traffic channel. It is also possible to add together the squared outputs of the matched filters, and to make soft statistical decisions therefrom and compare the so-obtained result with the pre-set or computed threshold value.

To ensure correct load state information, it is possible to use a special method known as two-dimensional packet detection. In spread spectrum transmissions, the time interval T_c between the correlation peaks in a direct sequence signal is known to be a constant. When the first correlation peak has been detected at the output of the matched filter, the second

correlation peak arriving after a time interval T_c can thus be used to ensure that the first observation has been correct.

According to one preferred embodiment of the invention, the load information about the traffic channel can be transmitted to the terminal equipments as MFSK-modulated signalling information, in the form of an enable/disable/reset signal. The load state of the traffic channel is compared with the channel capacity C, and if the current load n of the channel is higher than C, a reset signal is supplied to the terminal equipments. Similarly, if the current load n of the channel is lower than C, an enable signal is supplied to the terminal equipments. If the load equals the capacity, a disable signal is supplied to the terminal equipments. This load information is transmitted continuously so that each subscriber terminal has access to the information every moment.

The terminal equipment can also be informed of the load state by a two-level or higher than three-level signal, depending on how accurate control is wanted and what kind of control method is used in the terminal equipments.

The load information about the traffic channel need not be sent as an MFSK-modulated signal to the terminal equipments; it can also be transmitted e.g. as a wideband pilot signal by adding extra information to the data signal and using a signalling channel common to all the users for the transmission.

The terminal equipments receive the load information signal transmitted by the base station simultaneously with normal data traffic. In the terminal equipments, CDMA employs adaptive interference cancellation methods, by which the narrowband MFSK signal transmitted is eliminated from the received

wideband signal. The transmission of the load information does thus not weaken the quality of the actual connection. The effect of a load information signal transmitted as a wideband signal can also be eliminated by the interference cancellation methods.

According to another preferred embodiment of the invention, the base station estimates a change in the load state of the traffic channel upward or downward, and controls the transmission of the terminal equipments accordingly. This makes it possible to respond to a change on the traffic channel rapidly.

Fig. 2 is a scheme illustrating the operation of the method according to the invention in a subscriber terminal. In the terminal equipment, the signal to be transmitted is divided into bursts 30 in the time domain and stored in a buffer memory 31 for transmission. The terminal equipment receives information from the base station about the load of the traffic channel in the form of e.g. an enable/disable/reset signal 32. Full utilization of the available traffic capacity requires careful optimization. The information contained in the above-mentioned enable/disable/reset signal and the information about the state of the buffer memory are utilized in the subscriber terminals in transmitting signal bursts to the traffic channel.

In a preferred embodiment of the method according to the invention, a CSMA-based (Carrier Sense Multiple Access) protocol is used in the subscriber terminal for controlling the transmission. In the following one protocol alternative is described by way of an example.

When there is a burst in the buffer of a terminal equipment ready for transmission, the terminal checks the signal received from the base station for the load state of the traffic channel. If the load of the

channel is higher than or equal to the capacity, i.e. the base station has been transmitting a disable or reset signal, a new attempt is made to send the burst after a delay computed by a random number generator. If the load of the channel is lower than the capacity, i.e. the base station has been transmitting an enable signal, the burst is transmitted immediately. If the delay of the burst in the subscriber terminal exceeds a predetermined value, the burst can be transmitted, if necessary, regardless of a disable signal transmitted by the base station.

Various CSMA protocols are known from the literature. Many of these can be applied in the method of the invention, but the characteristics of the invention must be born in mind: e.g. that in the event of a collision, the burst need not be re-transmitted, since bursts whose transmissions coincide are not destroyed but only worsen the bit error ratio of all the users. CSMA protocols are discussed in greater detail in Kleinrock, Tobagi: 'Packet Switching in Radio Channels: Part I - Carrier Sense Multiple Access Modes and Their Throughput Delay Characteristics', *IEEE Transactions on Communications, Vol. COM-23*, No. 12, pp. 1400-1416, December 1975.

Voice information and other data information have different characteristics and different requirements for the channel to be used for the transmission of the information. The requirements for delays in voice transmission are very strict. Data, on the one hand, tolerates much longer delays than voice, but is, on the other hand, bursty in nature. Different data transmissions may also have different characteristics, such as delay tolerance, priority differences and burstiness. The method of the invention can be applied such that different protocols are used for such different types

of information. The capacity of the cellular network can thus be used optimally, although transmissions of different types are sent in the network. Different protocols can be used, for example, with transmissions having a different priority, different burst forms and maximum delays allowed.

In the following example, the base station is assumed to send information to the terminal equipments about the load state of the channel using an enable/disable/reset signal as described above, and the terminal equipments are assumed to send either voice or bursty, delay-tolerant data information.

If the terminal equipment transmits voice, the burst interval T_p is divided into M time slots of one T_s in length, T_s being greater than the propagation delay from the terminal equipment to the base station and back (MS-BTS-MS). If the signal transmitted by the base station is an enable signal, the burst is transmitted with a pre-set probability of pv. With the probability of 1-pv, a new attempt in made after an interval of one T_s. If a disable signal is detected at the moment the new decision is made, the transmission is delayed by an entire bit interval before a new attempt. If the burst is delayed in the terminal equipment longer than indicated by a predetermined value, the burst can be transmitted immediately, if necessary. Transmission of information having a low delay-tolerance can thus be avoided.

If the terminal equipment sends data, the protocol is otherwise of the type described above, but the used transmission probability pd is lower than the pv used with voice. If a reset signal from the base station is detected during the transmission, the transmission is interrupted.

The above is an example of only one possible protocol. The protocol employed by the terminal equipment may also take into account the delay caused by the buffer memory and estimate the delay of the future bursts as it makes the decision to transmit. If the delay is not critical and the channel is busy, the terminal equipment does not proceed with the transmission. If the delay is critical, the burst is either rejected or transmitted despite the load of the channel.

The above is a description of protocols used by the terminal equipment in controlling a transmission. In the method of the invention, the base station controls its transmission in the same way as the terminal equipment, based on the state of the buffer memory.

The base station divides the transmission of each connection into bursts in the time domain, and stores bursts in the individual buffer memories of the connections. The method is illustrated in fig. 4a, which shows the states of the buffer memories of the base station in a nine-user example. Different connections have a different number of bursts in the buffer memory waiting to be transmitted. In a preferred embodiment of the method according to the invention, the protocol used by the base station maintains, if possible, the number of bursts in various buffer memories equal. In the example of fig. 4a, user 1 has four bursts in the buffer, user 2 has two bursts, user 3 has six bursts, etc. New bursts are added to the right-hand side of the buffer and transmitted from the left-hand side. Let the capacity C of the traffic channel be six, i.e. the base station sends six bursts at a time. As the base station attempts to maintain the number of bursts in different buffers equal, it sends in fig. 4a six bursts from the

left during the next time slot so that after the transmission the state of the buffer memories is as shown in fig. 4b.

Fig. 5 is a block diagram illustrating the structure of a base station of the invention in a CDMA cellular radio network. On the receiver side, the base station comprises an antenna 50 by which a received signal is supplied through radio frequency parts 51 to a number of matched filters or correlators 52a-52c, each of which is synchronized to receive and demodulate simultaneous signals from subscriber terminals. From the matched filters, the signal is supplied to a combiner 54, which combines the different signal components of one and the same user in an advantageous manner. The base station of the invention also comprises means 53a-53c and 55 connected to the output of the matched filters for monitoring the load of the traffic channel. Means 53a-53c can be implemented e.g. in such a way that they detect whether or not each of the matched filters is receiving a signal at a given moment. The results obtained can be added in means 55 to obtain the number of active terminal equipments. It must naturally be taken into account here that several matched filters may be synchronized with a component of one and the same transmission of the terminal equipment propagated over a different path. In practice, means 53a-53c, 54 and 55 of the base station can be implemented in many ways, also by incorporating them into one and the same component.

On the transmitter side, the base station comprises means 57 for modulating the signal to be transmitted and for dividing it into bursts in the time domain, and means 57 for storing the bursts of each connection in a buffer memory specific for the connection. The base station also comprises means 56 for

controlling the transmission of the bursts through radio frequency parts 58 to the terminal equipments on the basis of the number of the bursts stored in the buffer memory, and means 56, 57 for sending the subscriber terminals information about the load state of the traffic channel.

The base station naturally also comprises other components, such as A/D and D/A converters and filters, but for the sake of clarity, they do not appear in the description and the drawings since they are irrelevant to the basic idea of the invention.

Fig. 6 is a block diagram illustrating the structure of a subscriber terminal of the invention in a CDMA cellular radio network. On the receiver side, the base station comprises an antenna 60 by which the received signal is supplied through radio frequency parts 61 to an A/D converter 62. The converted signal is supplied to matched filters 64a-64d, each of which is synchronized to a different signal component propagated over a different path. The converted signal is also supplied to a searcher correlator 63, which is used for acquiring signal components provided with a desired spreading code. From the matched filters, the signal is supplied to means 65, which combine the received signal components in an advantageous manner and detect the signal. From the combiner the signal is supplied to a channel decoder 66, and from there through a voice decoder 67 to a loudspeaker 68. The terminal

On the transmitter side, the subscriber terminal comprises a microphone 69 from which a signal is supplied through a voice coder 70 and channel coder 71 for spread-coding 73. The terminal equipment further comprises means 74 in which the signal to be transmitted is divided into bursts in the time domain, and means 74 in which bursts are kept in store in the buffer memory for transmission. The terminal equipment further comprises means 73 controlling the operation of the above components and regulating the number of the bursts to be transmitted per time unit on the basis of the load state of the traffic channel obtained from the base station. The terminal equipment of the preferred embodiment of the invention comprises means 73 that take into account the number of the bursts in the buffer memory as they control the transmission of the bursts.

The subscriber terminal naturally also comprises other components, such as filters, but for the sake of clarity, they do not appear in the description and the drawings since they are irrelevant to the basic idea of the invention.

Although the invention is described above with reference to the examples illustrated in the attached drawings, it is to be understood that the invention is not limited thereto but can be modified in many ways within the scope of the inventive idea disclosed in the attached claims.

Claims

1. A data transmission method in a CDMA cellular radio network having in each cell at least one base station (BTS) which communicates on a specified traffic channel with the terminal equipments (MS) located within its area, the signal of the users being divided in the method into bursts in the time domain, c h a r a c t e r i z e d in that the base station monitors the load state of the traffic channel, and that the base station sends the terminal equipments information about the load state of the traffic channel, and that the number of the bursts to be transmitted between the terminal equipments and the base stations per time unit is controlled on the basis of the delay state of the bursts and the load state information computed at the base station.

2. The method of claim 1, c h a r a c t e r - i z e d in that the base station (BTS) monitors the load state of the traffic channel by counting the number of the currently transmitting terminal equipments.

3. The method of claim 2, c h a r a c t e r - i z e d in that the base station (BTS) sends the terminal equipments (MS) information indicating whether the number of the currently transmitting terminal equipments is smaller than, equal to, or larger than the optimal traffic channel capacity.

4. The method of claim 1, c h a r a c t e r - i z e d in that the base station (BTS) sends the terminal equipments (MS) information about the load state of the traffic channel using an MFSK-modulated signal.

5. The method of claim 1, c h a r a c t e r - i z e d in that the base station (BTS) sends the terminal equipments (MS) information about the load state of the traffic channel by adding extra information

about it to the data signal transmitted to the terminal equipments.

6. The method of claim 1, c h a r a c t e r - i z e d in that the base station (BTS) sends the terminal equipments (MS) information about the load state of the traffic channel using a wideband pilot channel.

7. The method of claim 1, c h a r a c t e r - i z e d in that the base station (BTS) monitors the load state of the traffic channel and estimates the change in the load state, and that the number of the bursts to be transmitted between the terminal equipments (MS) and the base stations per time unit is controlled on the basis of the delay state of the bursts and the load state estimation computed at the base station.

8. The method of claim 1, c h a r a c t e r - i z e d in that the bursts to be transmitted are stored in the buffer memory in the terminal equipment (MS) before the transmission, and that the number of the bursts transmitted by the terminal equipment to the base station (BTS) per time unit depends on the number of the bursts stored in the buffer memory.

9. The method of claim 1, c h a r a c t e r - i z e d in that the number of the bursts transmitted by the terminal equipment (MS) to the base station (BTS) per time unit depends on what type of information the terminal equipment is transmitting.

10. The method of claim 9, c h a r a c - t e r i z e d in that the number of the bursts transmitted by the terminal equipment (MS) to the base station (BTS) per time unit depends on the delay-tolerance, priority or burstiness of the information to be transmitted.

11. The method of claim 1, c h a r a c t e r - i z e d in that the terminal equipment (MS) uses a CSMA

protocol in transmitting bursts to the base station (BTS).

12. The method of claim 1, c h a r a c t e r - i z e d in that the bursts may vary in length at different moments of time.

13. A data transmission method in a CDMA cellular radio network having in each cell at least one base station (BTS) which communicates on a specified traffic channel with the terminal equipments (MS) located within its area, the signal of the users being divided in the method into bursts in the time domain, c h a r a c t e r i z e d in that the base station (BTS) monitors the load state of the traffic channel, and that each burst sent to an individual terminal equipment (MS) with which the base station (BTS) communicates is stored in its own buffer memory at the base station before the transmission, and that the number of the bursts transmitted by the base station to the terminal equipments per time unit depends on the number of the bursts stored in the buffer memories.

14. The method of claim 13, c h a r a c t e r - i z e d in that the base station (BTS) maintains, if possible, the number of the bursts in the buffer memories of the different connections equal.

15. A base station for use in a CDMA cellular radio network having in each cell at least one base station (BTS) which communicates on a specified traffic channel with the terminal equipments (MS) located within its area, the base station comprising means (57) for dividing the signal to be transmitted to the terminal equipments into bursts in the time domain, c h a r a c - t e r i z e d in that the base station comprises means (53a-53c, 55) for monitoring the load of the traffic channel, means (56, 57) for transmitting information about the load state to the terminal equipments, means

(57) for storing the bursts in the buffer memory, and means (56) for controlling the transmission of the bursts to the terminal equipments on the basis of the traffic channel capacity and the number of the bursts stored in the buffer memory.

16. The base station of claim 15, c h a r a c - t e r i z e d in that the means (53a-53c) at the base station monitor the load state of the traffic channel by counting the number of the currently transmitting terminal equipments.

17. A terminal equipment for use in a CDMA cellular radio network having in each cell at least one base station (BTS) which communicates on a specified traffic channel with the terminal equipments (MS) located within its area, the terminal equipment comprising means (74) for dividing the signal transmitted to the base station into bursts in the time domain, c h a r a c t e r i z e d by comprising means (73) for controlling the number of the bursts to be transmitted to the base station per time unit on the basis of the instantaneous traffic load of the traffic channel and the delay state of the bursts.

18. The terminal equipment of claim 17, c h a r a c t e r i z e d by comprising means (74) for storing the bursts in the buffer memory, and means (73) for controlling the number of the bursts to be transmitted to the base station per time unit on the basis of the number of the bursts stored in the buffer memory.

19. The terminal equipment of claim 17, c h a r a c t e r i z e d by comprising means (64a-64d) for receiving the information transmitted from the base station about the traffic load state of the channel, and means (65) for eliminating the load information from the signal.

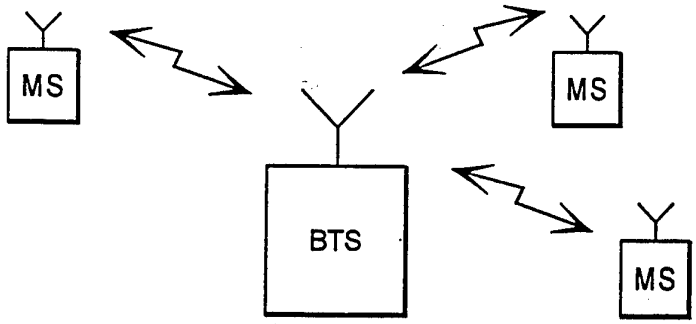

FIG. 1

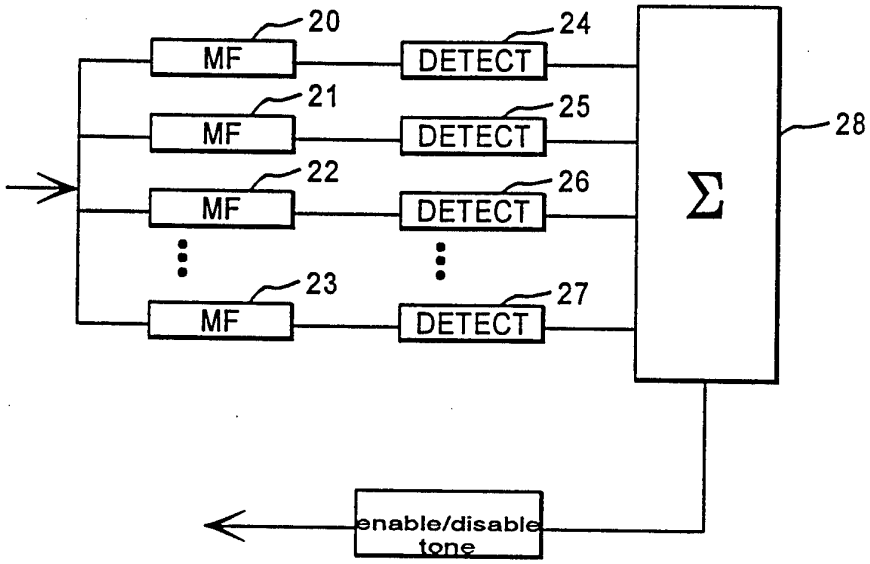

FIG. 2

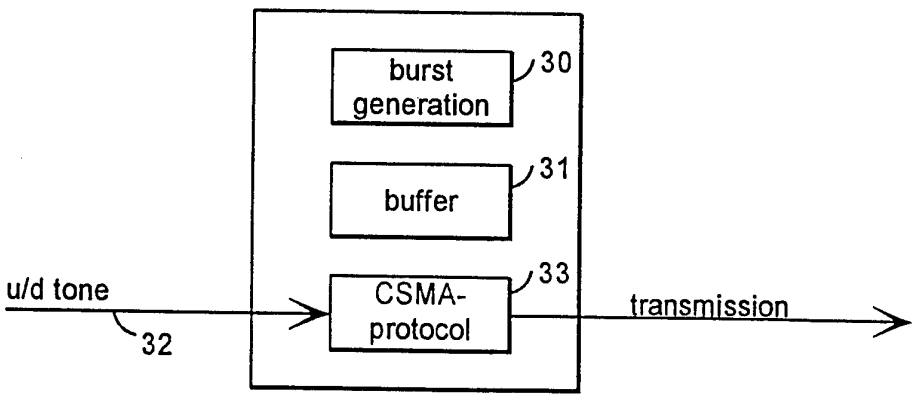

FIG. 3

		1	2	3	4	USER 1
				1	2	USER 2
1	2	3	4	5	6	USER 3
				1	2	USER 4
					1	USER 5
					1	USER 6
				1	2	USER 7
					1	USER 8
					1	USER 9

FIG. 4a

				3	4	USER 1
				1	2	USER 2
				5	6	USER 3
				1	2	USER 4
					1	USER 5
					1	USER 6
				1	2	USER 7
					1	USER 8
					1	USER 9

FIG. 4b

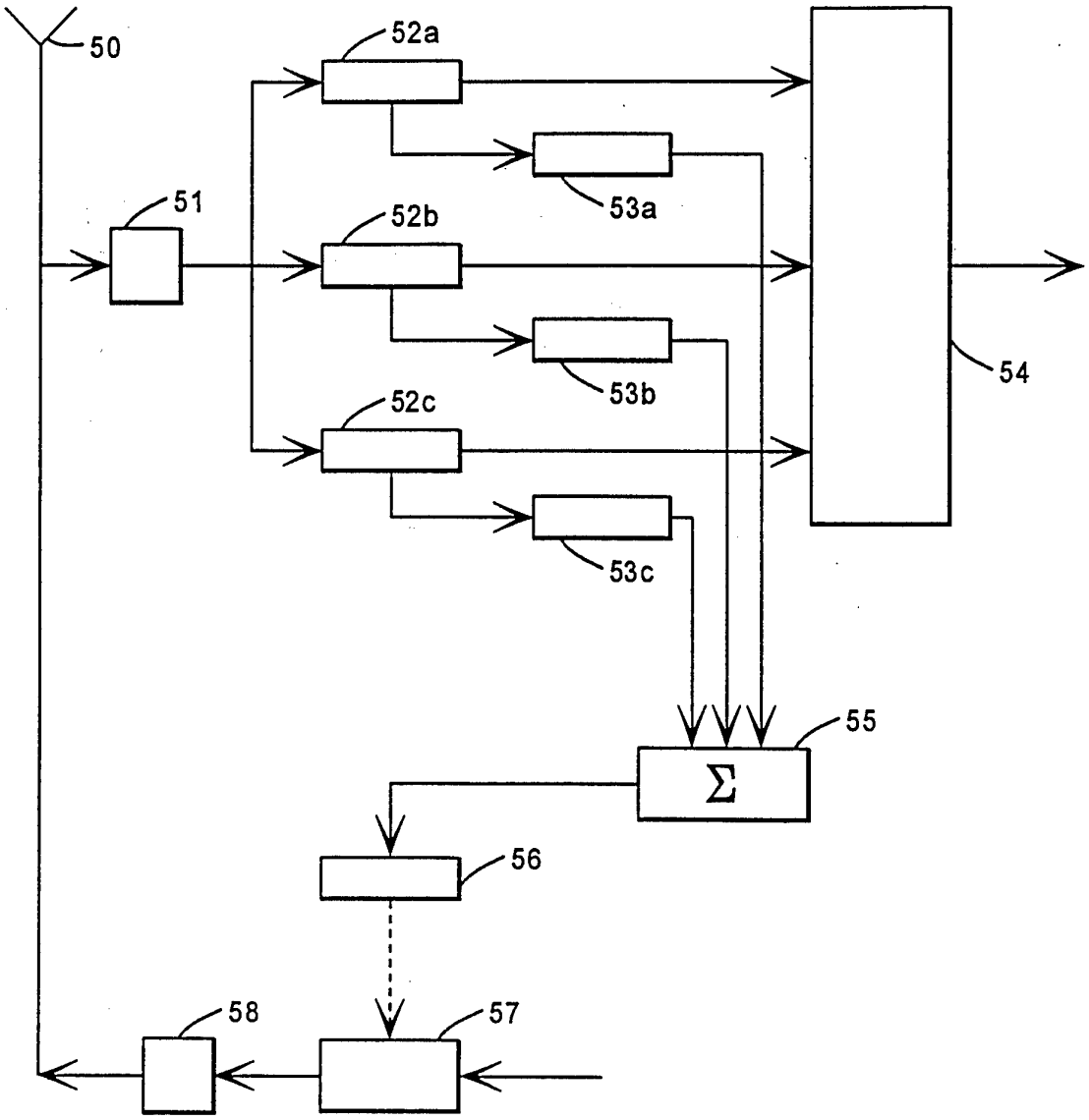

FIG. 5

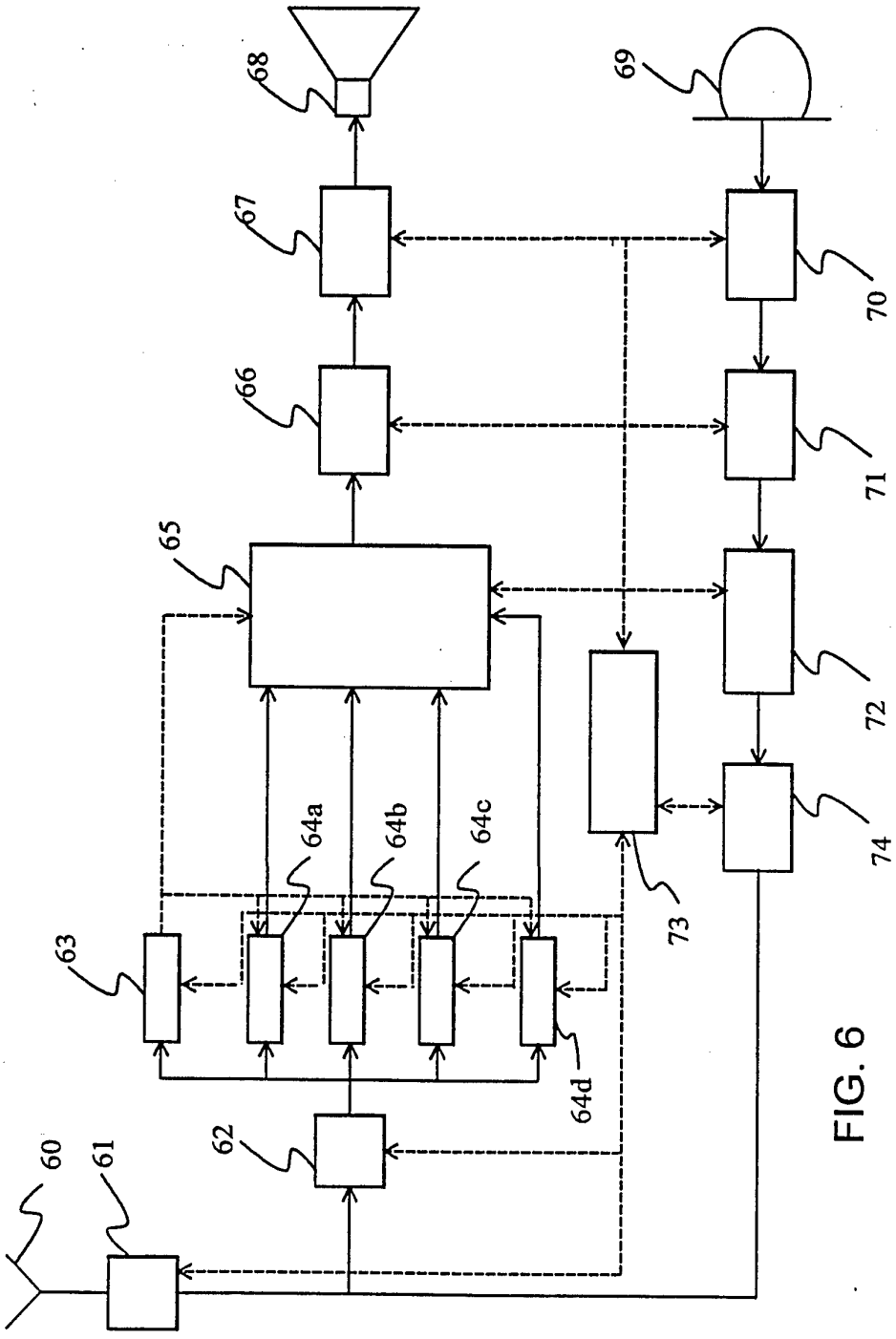

FIG. 6