(12) UK Patent Application (19) GB (11) 2 032 284 A

(21) Application No **7933103**
(22) Date of filing **25 Sep 1979**
(23) Claims filed **25 Sep 1979**
(30) Priority data
(31) **78/38974**
78/42128
78/49149
(32) **2 Oct 1978**
25 Oct 1978
19 Dec 1978
(33) **United Kingdom (GB)**
(43) Application published
8 May 1980
(51) **INT CL**^{3}
A62B 7/10
(52) Domestic classification
A5T CK
(56) Documents cited
None
(58) Field of search
A5T
(71) Applicants
Racal Safety Limited,
Beresford Avenue,
Wembley,
Middlesex HA0 1QJ.
(72) Inventors
Joseph Raymond Hilton
(74) Agents
A.A. Thornton & Co.

(54) **Improvements in and relating to breathing apparatus**

(57) A breathing apparatus comprises a housing, which may be a half face mask, a full face mask or a helmet (11). The housing is sealed to the wearer to define a substantially closed chamber surrounding the wearer's nose and mouth. Air is supplied to the helmet by a fan 16 and air exits from the chamber through an exhale valve 19 arranged to maintain a positive pressure within the chamber. To reduce the amount of air flowing through the filter 18, filtering air passing to the chamber, a detector 20, for example a pressure detector, is provided for detecting exhalation by the wearer and for reducing the air flow, for example by reducing the speed of the fan during at least part of the exhalation part of the breathing cycle of the wearer.

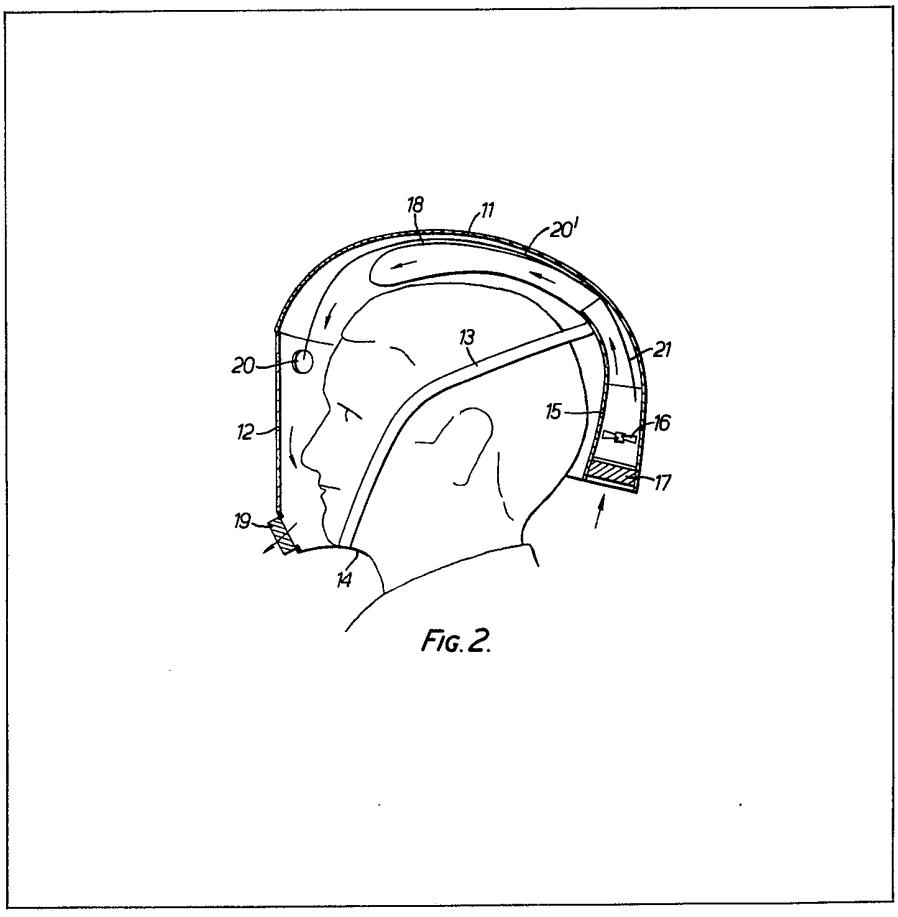

FIG. 2.

The drawing(s) originally filed was/were informal and the print here reproduced is taken from a later filed formal copy.

GB 2 032 284 A

2032264

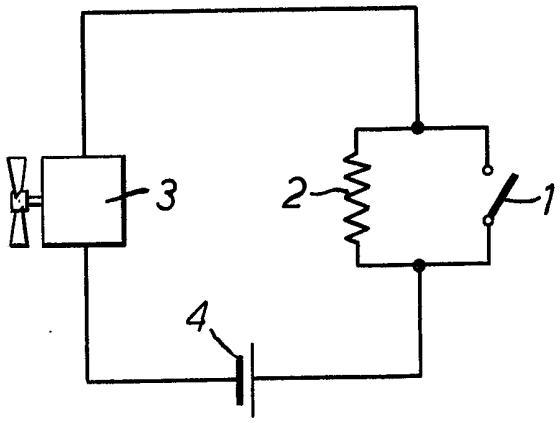

FIG. 1.

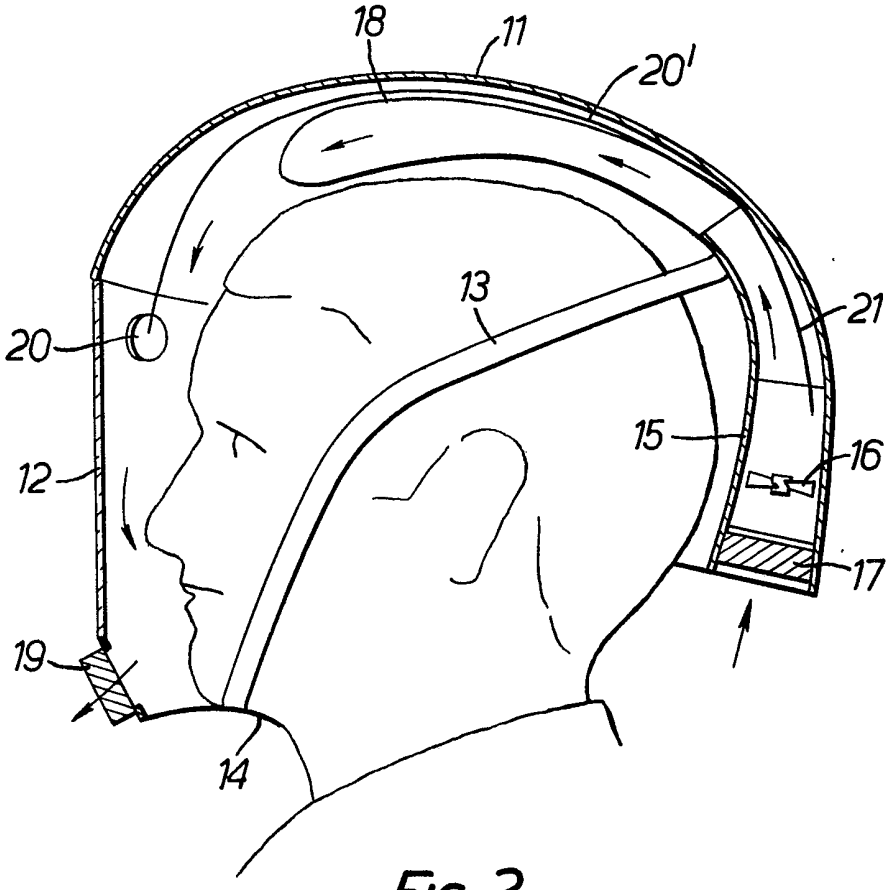

FIG. 2.

2032284

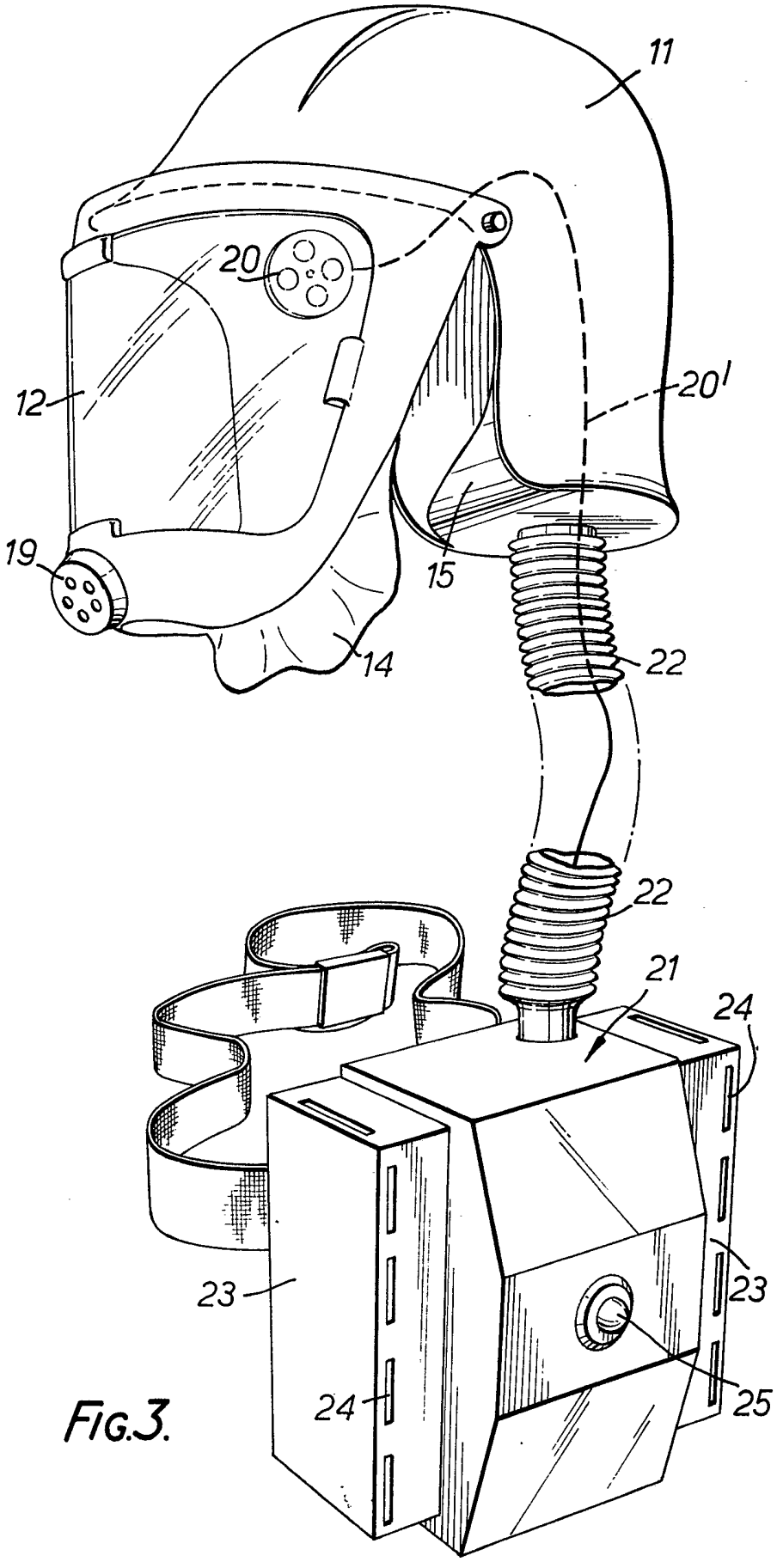

FIG.3.

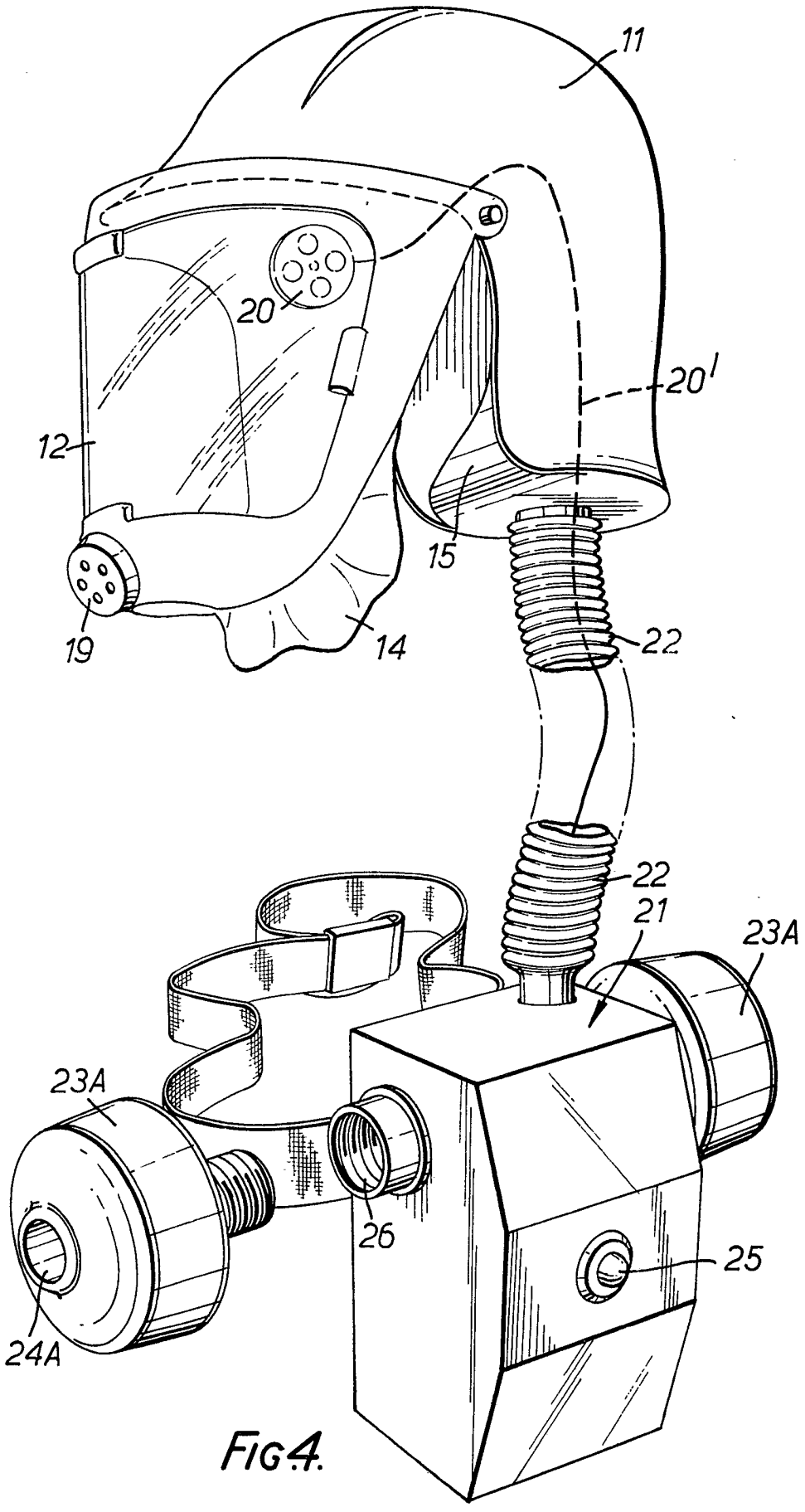

FIG.4.

2032284

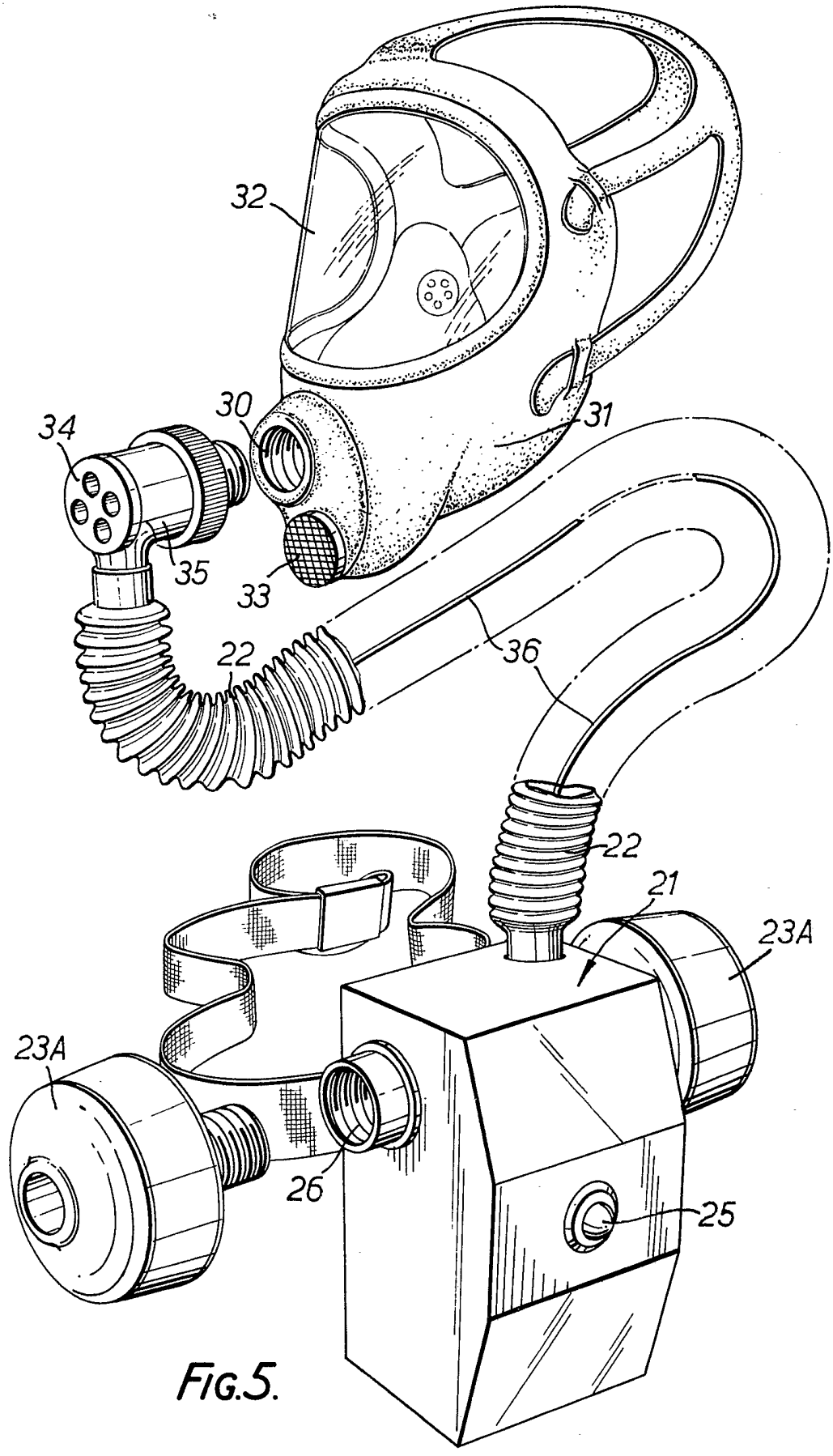

FIG.5.

2032284

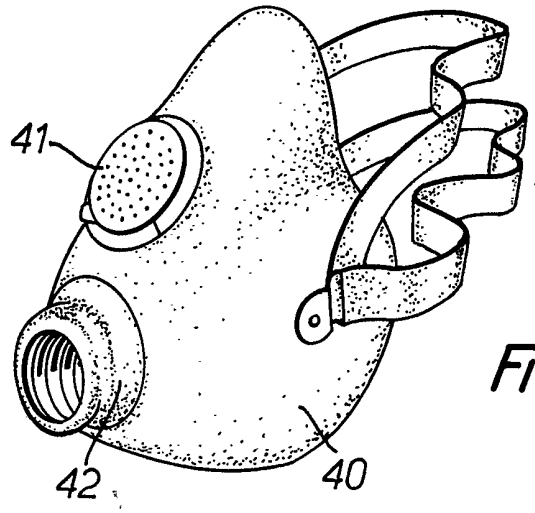

FIG.6.

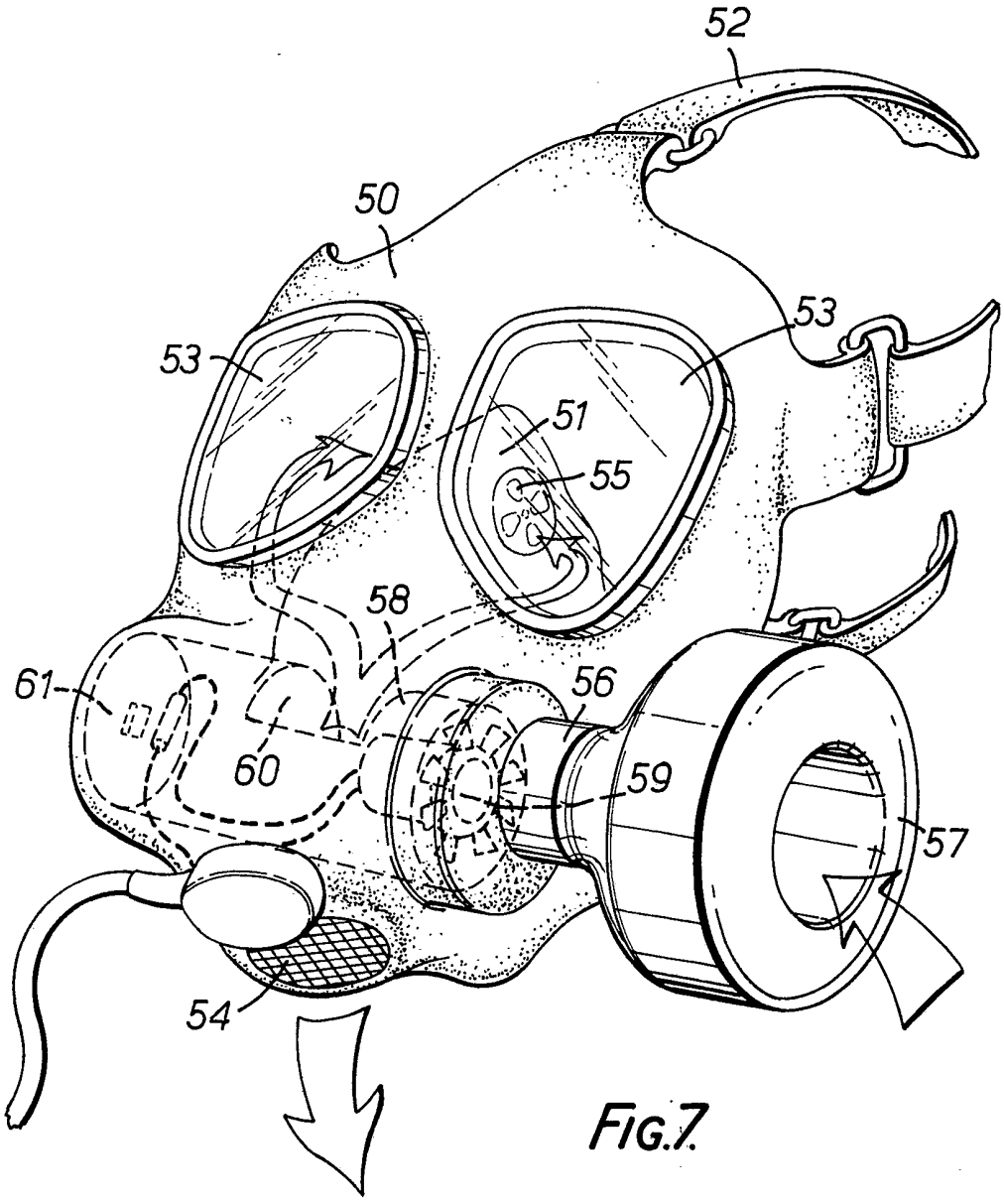

FIG.7.

2032284

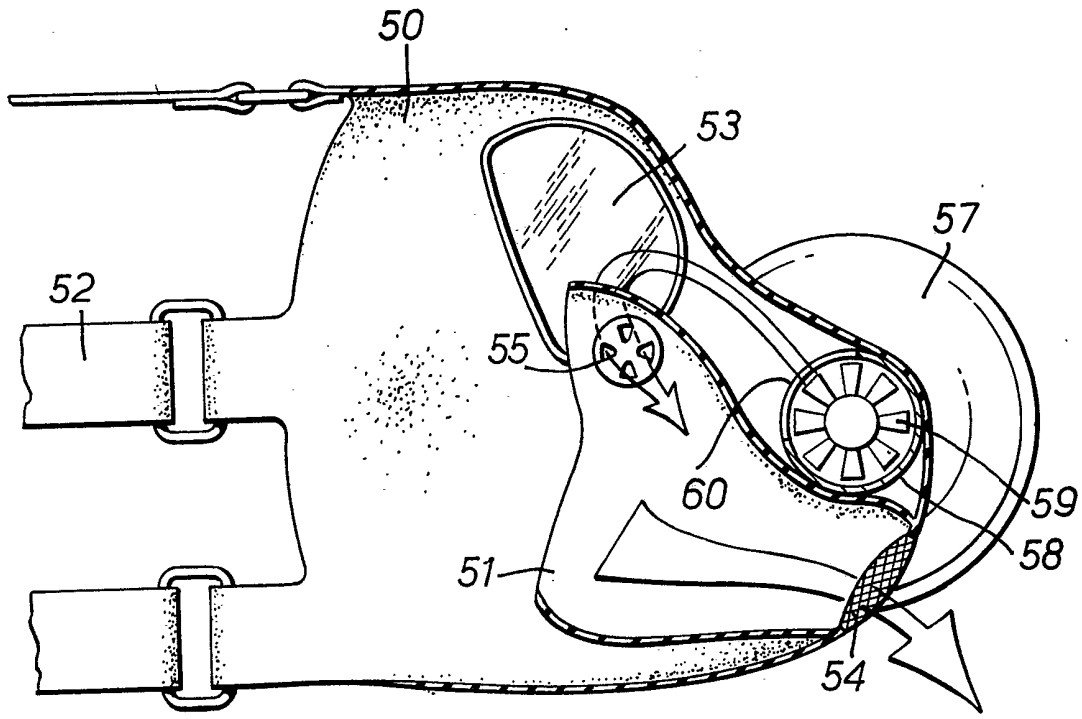

FIG.8.

SPECIFICATION

Improvements in and relating to breathing apparatus

The present invention relates to breathing apparatus, more particularly but not exclusively of the type known as powered respirators or power-assisted respirators in which a pump supplied filtered air to the face of the wearer to ensure a supply of clean breathable air in a dusty or otherwise contaminated environment.

The benefit to the wearer of using a powered respirator is that his lungs are relieved of the slight strain caused by inhalation against the resistance of the filters in a conventional non-powered respirator, in which filter cartridges are attached directly either to a full face mask or an orinasal mask. Additionally, in conventional non-powered respirators the act of inhalation causes a slight negative pressure within the mask which leads to leakage of the contaminants into the mask, which leakage could prove dangerous if these are toxic substances. The powered respirator, by delivering a steady stream of air to the face, supplies an abundance of air, usually so as to maintain a slight positive pressure, which may be determined by the resistance of an exhale valve, to ensure that any leakage is outward rather than inward.

A disadvantage of powered respirators is the limited life of the filter. This is particularly true of filters which remove contaminent gases and/or vapours from the air, but is also true of particle removing filters. The capacity of such filters is limited and depends on the amount of filter material provided and the speed of the gas flowing through them. It has long been recognised that a "constant flow" powered respirator, i.e. one in which the air flows through the respirator at a constant rate, is extremely wasteful because it leads to over-design of the capacity of the filter and consequently an increased weight of the respirator.

As it will be appreciated, only during the inhalation part of the breathing cycle of the wearer is the filter used to good effect. During exhalation filtered air continues to be provided although it is not required, thus unnecessarily depleting the adsorbency or dust holding capacity of the filter. The filter life is reduced because in effect the environment is being "vacuum cleaned", regardless of the actual demand of the wearer, which may be relatively small depending on the degree of exertion of the wearer.

The magnitude of the constant air flow is usually determined in design specifications to be not less than the maximum instantaneous gas flow associated with a particular level of activity. Assuming, as is commonly done, that the breathing pattern is sinusoidal, it can be shown that, where minute volume Vm is the product of tidal volume and the number of respirations per minute, then the maximum instantaneous flow is equal to $(Vm \times \pi)$.

For example, a person walking at 5 mph has a minute volume of 2 litres × 25 respirations per minute, i.e. 50 litres per minute, and a maximum instantaneous flow of 157 litres per minute. Thus if the respirator pump provides 160 litres per minute the pressure inside the respirator will remain positive and the wearer will not be starved of filtered air. It can be seen from this simple example that the filter means is being used up approximately three times faster than it need be according to the wearer's actual requirements.

According to the present invention there is provided breathing apparatus comprising a housing for mounting on the wearer to cover at least the nose and/or the mouth of the wearer and adapted to define with the wearer a substantially closed chamber surrounding the wearer's nose and/or mouth, outlet valve means for permitting air to flow from said chamber, pump means for supplying air to said chamber, filter means arranged for filtering air supplied by said pump means to said chamber, control means for controlling flow of air through said filter means and flowing to said chamber, and detector means for detecting exhalation by the wearer and connected to said control means for at least reducing flow of air through said filter means and flowing to said chamber during at least part of each exhale part of the breathing cycle of the wearer.

The control means may for example be arranged to control the speed of the pump means, for example to reduce the speed of the pump means during exhalation. This has an additional advantage where the pump means is energised from a DC battery which is carried by the wearer. Such batteries are usually of the rechargeable nickel-cadmium or lead-acid type and have a capacity for the duration of one working shift of the wearer, usually about 8 hours. With a reduction in the use of the battery, either the capacity and therefore its weight can be reduced or the breathing apparatus can be used for a longer period than 8 hourse.

The detector may comprise a pressure detector for detecting an increase in pressure on exhalation and may be arranged to change the state of a switch on detection of a pressure above a preset level. Where the detector is used to control the pump means, the switch may be connected in the circuit of the pump means, for example to switch in and out a resistor effective to change the speed of operation of the pump means.

The pressure detector may comprise a diaphragm which is subject on one face to pressure within the chamber and on the other face to atmosphere, the diaphragm being biased to maintain a positive pressure in the chamber.

The outlet valve means may also be arranged to permit air to flow from the chamber against a bias so as to maintain a positive pressure in the chamber.

The filter means may be arranged to filter air as it flows from the pump means to the chamber or as it flows to the pump means and may be removably mounted on the apparatus so as to be easily replaceable.

The housing may be a face mask covering only the nose and mouth of the wearer or covering the face of the wearer, and peripherally sealed thereto or may be in the form of a helmet having a visor extending over the face of the wearer and seal means for sealing the housing to the wearer's head to define

the chamber.

It will be appreciated that a number of advantages stem from control of the air flow using exhalation of the wearer and these include the fact that the power of exhalation is substantial and therefore relatively easy to detect and the fact that positive pressure within the chamber can be retained without recourse to additional means.

Embodiments according to the present invention will now be described, by way of example only, with reference to the accompanying drawings.

In the drawings:

Figure 1 is a diagrammatic circuit for use in controlling an embodiment of breathing apparatus according to the present invention;

Figure 2 is a diagrammatic illustration of an embodiment of breathing apparatus according to the present invention;

Figures 3 to *7* are perspective views of other embodiments of breathing apparatus according to the present invention; and

Figure 8 is a section through the embodiment of Figure 7.

Embodiments of breathing apparatus according to the present invention each comprise a housing of any suitable form, for example as will be described, for mounting on the wearer to cover at least the nose and/or mouth of the wearer and which is adapted to be sealed to the wearer to define therewith a substantially sealed chamber. The chamber is connected directly or via a flexible hose to the output of a pump, for example a fan driven by a motor, for supplying air to the chamber. The pump draws in dust laden air, or air contaminated with other forms of pollutant harmful to the wearer, through one or more inlets and pumps that air into the chamber. Upstream and/or downstream of the pump the air passes through a filter which is designed to remove the pollutant. The filter may comprise layers of material or particulate material, e.g. activated charcoal, depending on the pollutant. Wherever the filter is arranged, all the air passing through to the chamber passes through the filter first.

The housing is also provided with a one way outlet or exhale valve, preferably arranged adjacent the wearer's mouth, and the exhale valve preferably has a resistance, for example of the order of 10mm w.g. at 1 litre per min so that a positive pressure is maintained within the chamber.

A detector for detecting exhalation of the wearer is provided and may be mounted on the housing or form part of the exhale valve. The detector may detect the carbon dioxide or moisture content of the exhaled air but is conveniently a pressure detector which detects the increase in pressure within the housing on exhalation. The detector is connected to control the flow of air into the chamber, in such a way as to reduce the flow of air through the filter during exhalation periods.

The detector may be connected to control the pump so as to stop the pump or reduce its speed during exhalation. More particularly, the detector is arranged to act on the pump when the pressure in the chamber exceeds a preset minimum, which is above atmospheric pressure, e.g. 15mm w.g. and to maintain its action on the pump for the period that the pressure exceeds the preset pressure.

In a particular embodiment, the detector comprises a diaphragm mounted with one face subject to pressure in the chamber and the other face subject to atmospheric pressure. The diaphragm is associated with a switch, for example a proximity switch of magnetic or capacitance type, so as to change the state of the switch when the pressure in the chamber increases beyond the preset pressure. The diaphragm may be spring biased, the biasing of the spring determining the level of the preset pressure. The switch is connected in the circuit to the pump so as either to stop the pump or reduce its speed when it is acted on by the diaphragm. For example, as shown in Figure 1, the switch 1, which is closed during inhalation and opened by the action of the diaphragm, is connected so as to switch a resistance 2 in and out of the circuit of the pump 3, which as shown is powered by a DC battery 4.

In operation, during inhalation, the pump 3 runs normally and delivers the required amount of air to the wearer who largely enhales it, any surplus air escaping through the exhale valve. At the moment of exhalation the build up in pressure within the chamber causes the diaphragm of the pressure detector to act on the switch which in turn acts on the pump, for example either to stop the pump or preferably to reduce its speed to a level which is just sufficient to wash the carbon dioxide in the exhale out of the chamber. Towards the end of exhalation, when the pressure in the chamber has dropped to the preset level, the switch is returned to its original position and the pump returns to its initial speed.

Thus the life of the filter used is prolonged by reducing the flow of air through it during the exhale part of the breathing cycle of the wearer. Additionally, where the pressure detector acts on the pump to reduce its speed, this has the advantage of reducing the demand on the battery and therefore extending the life of the battery.

As will be appreciated, the invention is applicable not only to helmet type breathing apparatus but also to face mask type breathing apparatus and the application of the invention to both types will now be described in detail.

There is shown in Figure 2 a respirator helmet which is similar to that described in British patent applications nos. 13027/76 and 14194/76 and marketed under the trade mark AIRSTREAM. As described in the above referred to applications, the helmet comprises a shell 11 which extends over the top, rear and sides of the head and is provided inwardly with a supporting harness (not shown) by which it bears on the wearer's head. At the front, the helmet is closed by a transparent visor 12 and a seal 13 is provided to seal the gap between the shell 11 and the wearer's head around the head and down the sides of the face. The lower edge of the visor 12 is closed by a seal 14, e.g. a flexible membrane, attached to the lower edge of the visor and which bears against the wearer's chin.

At the rear, a housing 15 is provided in which a fan 16 driven by a battery operated DC electric motor is mounted. The fan draws air in through the lower

open end of the housing 15 through a filter 17 and pumps the air into the chamber within the helmet and defined by the shell 11, visor 12, seals 13 and 14 and the wearer. The air is filtered by a filter bag 18 extending in the space above the wearers head. Other forms of filter 17, 18 may of course be provided depending on the contaminant to be removed. At the lower edge of the visor an exhale valve 19 is provided and a pressure detector 20 is mounted on the visor in a position in which it does not obscure the sight of the wearer. The detector 20 is connected by wires 20' to control the fan motor.

The detector 20 is as described above as is the operation of this respirator helmet.

The respirator helmet shown in Figure 3 is similar to that shown in Figure 2 and like reference numerals have been used for like parts. The difference between this embodiment and that of Figure 2 is that the fan, motor and filters are provided in a separate power pack 21 which is connected by flexible trunking 22 to the lower end of the housing 15 which is adapted to receive the end of the trunking 22.

The power pack is provided with a waist belt or other means so that it can be readily attached to an appropriate part of the wearer's body or carried by the wearer. The pack comprises a battery and a pump comprising a fan driven by a DC motor, the pump outlet being connected to the trunking 22. The pump draws air in through filter cartridges 23 which are provided with inlets 24. The filter cartridges 23 are arranged to be demountable so that a used cartridge can be replaced by a new one. The cartridges 23 include any suitable form of filter depending on the contaminant to be removed and, in the illustrated embodiment, the filter comprises pleated glass fibre paper filters, the helmet being designed for use in non-toxic conditions.

A master switch 25 is provided on the power pack but, once the switch 25 is switched on, operation of the motor of the fan is then controlled by the detector 20. The connection 20' between the detector 20 and the motor is arranged to extend through the trunking 22.

The apparatus shown in Figure 4 is indentical to that shown in Figure 3 (and like reference numerals have been used for like parts) except that it is adapted for use in toxic atmospheres. Accordingly the pleated paper filter cartridges 23 of Figure 3 have been replaced by cartridges 23*a* which are screwed into the fan inlets 25 provided on each side of the pack 21. For toxic gas environments the filter in cartridges 23*a* may be charcoal granules.

The breathing apparatus shown in Figure 5 comprises a pack 21 which as shown is the same as that shown in Figure 4 but may be as shown in Figure 3. The trunking 22 from the pack is, in this embodiment, connected to an inlet opening 30 in the front of a full face mask 31 having a window 32 and of known type. The mask is provided with an exhale valve 33. In this embodiment the exhale detector 34 is provided not on the mask itself but on a fitting 35 which is in fact connected between the trunking 22 and the mask inlet 30. The detector 34 is, as before, connected to the motor in the pack 21 by means of wires 36 passing through the trunking 22. Operation of this embodiment is exactly as described before in connection with the preceding embodiments.

A modification of the embodiment of Figure 5 is shown in Figure 6. The mask 32 of Figure 5 is replaced by the half mask 40 shown in Figure 6 which is intended to cover simply the nose and mouth of the wearer and is sealed to the wearer's face and chin. The mask 40 is provided with an exhale valve 41 and an inlet 42 which receives the end of the fitting 35.

The embodiment of breathing apparatus shown in Figures 7 and 8 is intended for use in highly toxic environments and comprises an outer mask 50 and an inner mask 51. The outer mask is provided with straps 52 by means of which it is retained on the wearer's head and includes viewing means, as shown two eye glasses 53. The outer mask fits peripherally against the wearer's face so as to be sealed thereto and holds the inner mask, which covers the nose and mouth of the wearer, against the wearer's face so that it is sealed thereto. The inner mask may for example be made of rubber or a synthetic plastics material.

The outer mask is provided with an exhale valve 54 which is also in communication with the inner mask, the inner mask being sealingly connected around the valve 54 on the inner surface of the outer mask. The inner mask is also provided with flap valves 55, these valves being one-way valves which open on inhalation and close during exhalation for reasons which will appear.

Laterally, the outer mask is provided with an inlet 56 to which is attached a filter cannister 57. Internally the inlet 56 is connected to a cross tube 58 which extends above the exhale valve 54 laterally across the front of the outer mask. An electrically powered fan 59 is mounted within tube 58 adjacent the inlet 56 to draw air into the mask through the filter cannister 57. Air from the fan 59 exits from tube 58 via an outlet 60 provided intermediate the end of the tube.

A pressure detector 61 is provided at the other end of the tube 58 remote from the fan 59.

In operation the fan 59 draws air in through the filter 57 and the filtered air passes from the fan through outlet 60 into the space between the inner and outer masks. During inhalation filtered air is drawn into the inner mask through the valves 55 and exhaled air exits through valve 54. During exhalation, valves 55 close and it is the consequent build up in pressure within the outer mask that operates the detector 61 which is connected to the fan motor to reduce the speed of the fan. Thus at all times a positive pressure is maintained within the outer mask, as well as within the inner mask, to provide the wearer with twofold protection against the toxic contaminants in the atmosphere being inhaled by him.

It will be appreciated that, as in all the previous embodiments, the filter means, in this embodiment cannister 57, is readily detachable from the apparatus to be replaced by a new cannister, when it is exhausted.

It will also be appreciated that the power supply to drive the motor of the fan 59 is connected by a

flexible lead to the outer mask and the main power switch is provided on the power pack. Conveniently also the detector 61 is connected to the power pack for control of the fan.

There are thus provided breathing apparatus in which unnecessary use of the filter is reduced to a minimum compatible with safety and which has the additional advantage that use of the pump supplying air to the breathing apparatus is minimised.

It will be appreciated that the detector may be used in other ways to control air flow into and through the breathing apparatus with a view to reducing the volume of air flowing through the filter means.

CLAIMS

1. Breathing apparatus comprising a housing for mounting on the wearer to cover at least the nose and/or the mouth of the wearer and adapted to define with the wearer a substantially closed chamber surrounding the wearer's nose and/or mouth, outlet valve means for permitting air to flow from said chamber, pump means for supplying air to said chamber, filter means arranged for filtering air supplied by said pump means to said chamber, control means for controlling flow of air through said filter means and flowing to said chamber, and detector means for detecting exhalation by the wearer and connected to said control means for at least reducing flow of air through said filter means and flowing to said chamber during at least part of each exhale part of the breathing cycle of the wearer.

2. Apparatus as claimed in claim 1, wherein said control means is arranged to control the speed of said pump means.

3. Apparatus as claimed in claim 2, wherein said control means is connected to reduce the speed of said pump means.

4. Apparatus as claimed in any one of the preceding claims, wherein said detector means comprises a pressure detector for detecting an increase in pressure in said chamber resulting from exhalation by the wearer.

5. Apparatus as claimed in any one of the preceding claims, wherein said detector means is arranged to change the state of switch means on detection of a pressure above a preset level and to maintain said changed state of said switch means until the pressure drops below said preset level.

6. Apparatus as claimed in either claim 4 or claim 5, wherein said pressure detector comprises a diaphragm subject on one face to the pressure within said chamber and subject on the other face to atmospheric pressure, said diaphragm being biased so as to move when the pressure in the said chamber is above atmospheric pressure by a preset amount so as to maintain a positive pressure within said chamber.

7. Apparatus as claimed in any one of the preceding claims, wherein said outlet valve means comprises a one way valve means which is openable to permit air to flow therethrough from said chamber against a bias for maintaining a positive pressure in said chamber.

8. Apparatus as claimed in any one of the preceding claims, wherein said filter means is arranged to filter air as it flows from said pump means to said chamber.

9. Apparatus as claimed in any one of claims 1 to 7, wherein said filter means is arranged to filter air flowing to said pump means.

10. Apparatus as claimed in any one of the preceding claims, wherein said filter means is arranged to be removable from the apparatus for replacement purposes.

11. Apparatus as claimed in any one of the preceding claims, wherein said housing is adapted to cover the nose and mouth of the wearer and to be peripherally sealed to wearer's face.

12. Apparatus as claimed in claim 11, wherein said housing is adapted to cover the face of the wearer and to be peripherally sealed thereto.

13. Apparatus as claimed in any one of claims 1 to 10, wherein said housing covers the head of the wearer and includes a visor extending over the face of the wearer, seal means being provided for sealing said housing to said wearer's head to define said chamber.

14. Breathing apparatus substantially as herein described with reference to Figures 1 and 2 of the accompanying drawings.

15. Breathing apparatus substantially as herein described with reference to any one of Figures 3 to 6 of the accompanying drawings.

16. Breathing apparatus substantially as herein described with reference to Figures 7 and 8 of the accompanying drawings.

Printed for Her Majesty's Stationery Office by Croydon Printing Company Limited, Croydon Surrey, 1980.
Published by the Patent Office, 25 Southampton Buildings, London, WC2A 1AY, from which copies may be obtained.