(19) Europäisches Patentamt
European Patent Office
Office européen des brevets

(11) EP 3 491 987 A1

(12) EUROPEAN PATENT APPLICATION
published in accordance with Art. 153(4) EPC

(43) Date of publication:
**05.06.2019 Bulletin 2019/23**

(21) Application number: **17834551.8**

(22) Date of filing: **28.07.2017**

(51) Int Cl.:
***A47L 9/00*** *(2006.01)* ***A47L 5/24*** *(2006.01)*
***A47L 9/08*** *(2006.01)*

(86) International application number:
**PCT/JP2017/027515**

(87) International publication number:
**WO 2018/021549 (01.02.2018 Gazette 2018/05)**

(84) Designated Contracting States:
**AL AT BE BG CH CY CZ DE DK EE ES FI FR GB GR HR HU IE IS IT LI LT LU LV MC MK MT NL NO PL PT RO RS SE SI SK SM TR**
Designated Extension States:
**BA ME**
Designated Validation States:
**MA MD**

(30) Priority: **29.07.2016 JP 2016149921**
**29.07.2016 JP 2016149923**

(71) Applicant: **Toshiba Lifestyle Products & Services Corporation**
**Kawasaki-shi, Kanagawa 210-8543 (JP)**

(72) Inventors:
- **MACHIDA, Yukio**
**Kawasaki-shi**
**Kanagawa 210-8543 (JP)**
- **SHINAGAWA, Naoko**
**Kawasaki-shi**
**Kanagawa 210-8543 (JP)**
- **ABE, Yusuke**
**Kawasaki-shi**
**Kanagawa 210-8543 (JP)**
- **SHIMIZU, Takayoshi**
**Kawasaki-shi**
**Kanagawa 210-8543 (JP)**
- **MANO, Fumiki**
**Kawasaki-shi**
**Kanagawa 210-8543 (JP)**

(74) Representative: **Haseltine Lake Kempner LLP**
**Redcliff Quay**
**120 Redcliff Street**
**Bristol BS1 6HU (GB)**

# (54) ELECTRIC VACUUM CLEANER

(57) Provided is a vacuum cleaner capable of efficiently utilizing exhaust of an electric blower when the vacuum cleaner is used as a blower. An exhaust air path (37) is arranged in a body portion (21) so as to communicate between an exhaust side of the electric blower and an exhaust port. A connecting port (34) is arranged on the body portion (21) . A blower air path (38) is arranged in the body portion (21) so as to communicate between the exhaust side of the electric blower and the connecting port (34). A switching valve (39) is arranged capable of opening and closing the connecting port (34), so as to switch between the exhaust air path (37) and the blower air path (38) according to the opening and closing. An attachment (17), when being attached to the connecting port (34), communicates with the blower air path (38) upon switching by the switching valve (39).

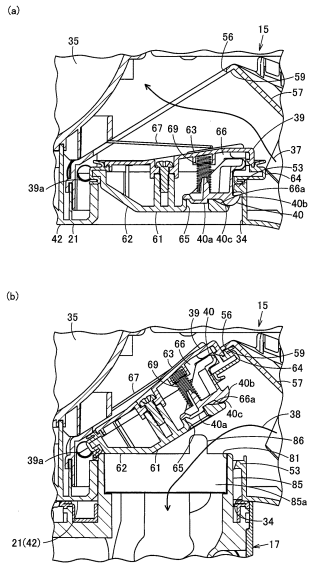


FIG. 1

EP 3 491 987 A1

## Description

TECHNICAL FIELD

**[0001]** Embodiments described herein relate generally to a vacuum cleaner available as a blower which utilizes exhaust of an electric blower upon attaching of an attachment.

BACKGROUND ART

**[0002]** Conventionally, some vacuum cleaners used as, for example, a suction cleaner, are available as a blower, when a suction hose body or the like is connected to a connecting port arranged in an exhaust path of an electric blower. Such a configuration capable of effectively blowing off dust and dirt by efficient use of exhaust of the electric blower is desired.

CITATION LIST

Patent Literature

**[0003]** PTL 1: Japanese Laid-Open Patent Publication No. 2011-250972

SUMMARY OF INVENTION

Technical Problem

**[0004]** The present invention is to provide a vacuum cleaner capable of efficiently utilizing exhaust of an electric blower in the case of being used as a blower, in consideration of the matter above.

Solution to Problem

**[0005]** A vacuum cleaner according to an embodiment includes a body portion, a dust-collecting unit, an exhaust port, an exhaust air path, a connecting port, a blower air path, switching means, and an attachment. The body portion includes an electric blower. The dust-collecting unit communicates with a suction side of the electric blower so as to catch and collect dust and dirt by operation of the electric blower. The exhaust port is arranged on the body portion. The exhaust air path is arranged in the body portion so as to communicate between an exhaust side of the electric blower and the exhaust port. The connecting port is arranged on the body portion. The blower air path is arranged in the body portion so as to communicate between the exhaust side of the electric blower and the connecting port. The switching means is arranged capable of opening and closing the connecting port so as to switch between the exhaust air path and the blower air path according to the opening and closing. The attachment, when being attached to the connecting port, communicates with the blower air path upon switching by the switching means.

BRIEF DESCRIPTION OF DRAWINGS

**[0006]**

Fig. 1(a) is a cross sectional view showing a part of a vacuum cleaner without an attachment according to one embodiment, and Fig. 1(b) is a cross sectional view showing a part of the same vacuum cleaner with an attachment attached;
Fig. 2 is a cross sectional view showing the same vacuum cleaner in a sucking state;
Fig. 3 is a perspective view showing the periphery of a connecting port of a body portion of the same vacuum cleaner;
Fig. 4 is a perspective view showing a part of the inside of the same body portion;
Fig. 5 is a perspective view showing the same vacuum cleaner in one sucking state;
Fig. 6 is a perspective view showing the same vacuum cleaner in another sucking state;
Fig. 7 is a cross sectional view showing the same vacuum cleaner in a blowing state;
Fig. 8 is a perspective view showing an attachment of the same vacuum cleaner;
Fig. 9 is a cross sectional view showing a part of the process for attaching the attachment of the same vacuum cleaner;
Fig. 10 is a perspective view showing the same vacuum cleaner in one blowing state;
Fig. 11 is a perspective view showing the same vacuum cleaner in another blowing state.

DESCRIPTION OF EMBODIMENTS

**[0007]** One embodiment will be described in terms of its configuration with reference to Fig. 1 to Fig. 11.

**[0008]** In Fig. 5, reference sign 11 denotes a vacuum cleaner, and the vacuum cleaner 11 includes a cleaner main body 15. As shown in Fig. 6, the vacuum cleaner 11 may also include an air path element 16 in a longitudinal shape to be connected to the cleaner main body 15. As shown in Fig. 10, the vacuum cleaner 11 further includes an attachment 17 to be attached to the cleaner main body 15. Then, the vacuum cleaner 11 is available as a handy-type (portable) cordless suction vacuum cleaner when it is in one sucking state (Fig. 5) corresponding to a specified sucking state by use of the cleaner main body 15 alone. In the case of including the air path element 16, the vacuum cleaner 11 is also available as a stick-type cordless suction vacuum cleaner when it is in another sucking state (Fig. 6) with the air path element 16 connected to the cleaner main body 15. Further, the vacuum cleaner 11 is available as a handy-type cordless blower when it is in one blowing state (Fig. 10) or another blowing state (Fig. 11) corresponding to a specified blowing state which is a specified blower use state with the attachment 17 connected to the cleaner main body 15. It is noted that a vacuum cleaning apparatus

may be configured with the vacuum cleaner 11 and an unshown container device for housing the vacuum cleaner 11 when not in use.

**[0009]** The cleaner main body 15 shown in Fig. 1 to Fig. 6 includes a body portion 21. The cleaner main body 15 also includes a dust-collecting unit (dust-collecting device) 22 detachable to/from the body portion 21. The cleaner main body 15 further includes an electric blower 23. The cleaner main body 15 also includes a control unit 24 as control means (a controller) for controlling the operation of the electric blower 23. The cleaner main body 15 further includes a secondary battery 25 which is a battery as a power source part serving as a power source for the electric blower 23, the control unit 24 and the like. The cleaner main body 15 also includes a main body connecting port 26 to which the air path element 16 can be connected. The cleaner main body 15 further includes a handle (gripping part) 27 which is a main body holding part as a human body contact part for use for holding the cleaner main body 15 (vacuum cleaner 11). The cleaner main body 15 also includes a setting button 28 as setting means (a setting part) for use for setting an operation mode of the electric blower 23. The cleaner main body 15 also includes a first communicating port 31 and a second communicating port 32 each of which communicates with the dust-collecting unit 22. The cleaner main body 15 further includes an exhaust port 33 for discharging the exhaust of the electric blower 23. The cleaner main body 15 also includes a connecting port 34 where the attachment 17 (Fig. 8) can be attached/detached. In addition, inside the cleaner main body 15, a suction air path 35 communicating between the main body connecting port 26 and the first communicating port 31 is formed. Further, inside the cleaner main body 15, a communicating air path 36 communicating between the second communicating port 32 and the suction side of the electric blower 23 is formed. In addition, inside the cleaner main body 15, an exhaust air path 37 communicating between the exhaust side of the electric blower 23 and the exhaust port 33 is formed. Inside the cleaner main body 15, a blower air path 38 communicating between the exhaust side of the electric blower 23 and the connecting port 34 is also formed. The cleaner main body 15 further includes a switching valve 39 which is switching means (a switching part) capable of opening/closing the connecting port 34, that is, opening/closing means (an opening/closing part) as a switcher. Then, the cleaner main body 15 includes a locking part (locking clamp) 40 as fixing means (a fixing part) for fixing the switching valve 39 at a position where the switching valve 39 closes the connecting port 34.

**[0010]** It is noted that in order to provide clearer description in terms of the vacuum cleaner 11, hereinafter, a direction substantially in parallel with the axis of the main body connecting port 26 is defined as a back-and-forth direction, and an up-and-down direction and a left-and-right direction are defined based on the back-and-forth direction. That is, the up-and-down direction, the left-and-right direction and the back-and-forth direction in terms of the vacuum cleaner 11 are based on the states respectively shown in Fig. 2 and Fig. 7, and the directions shown by an arrow U and an arrow D are defined as the up-and-down direction, the directions shown by an arrow FR and an arrow RR are defined as the back-and-forth direction, and the directions shown by an arrow L and an arrow R are defined as the left-and-right direction.

**[0011]** The body portion 21 shown in Fig. 1 to Fig. 6 is formed as a whole in a shape elongated in the back-and-forth direction. The body portion 21 houses the electric blower 23, the control unit 24 and the secondary battery 25 respectively. Also on the body portion 21, the main body connecting port 26 is opened. Further on the body portion 21, the handle 27 is arranged to project. Also on the body portion 21, the first communicating port 31 and the second communicating port 32 are opened. Further on the body portion 21, the exhaust port 33 is opened. Also on the body portion 21, the connecting port 34 is opened. Further in the body portion 21, the suction air path 35 is arranged. Also in the body portion 21, the communicating air path 36 is arranged. Also in the body portion 21, the blower air path 38 is arranged. Further to the body portion 21, the switching valve 39 is attached. Then, the body portion 21 includes a first body portion 42 which is arranged in the front portion thereof and extends along the back-and-forth direction, a second body portion 43 which is arranged in the rear portion thereof and extends along the back-and-forth direction, and an inclined body portion 44 serving as a connecting body portion which connects the first body portion 42 and the second body portion 43. Also on the body portion 21, an attaching-and-holding part 45 which attaches and holds the dust-collecting unit 22 is arranged.

**[0012]** The first body portion 42 is formed substantially linearly along the back-and-forth direction. The second body portion 43 is located below the first body portion 42. The second body portion 43 is also formed linearly along the back-and-forth direction. Thus, the second body portion 43 is formed substantially in parallel with the first body portion 42. Further, the inclined body portion 44 is formed along a line inclined from the upper front portion to the lower rear portion thereof. Thus, the body portion 21 is formed bent substantially in a crank shape.

**[0013]** The attaching-and-holding part 45 is arranged to project upward from the upper portion of the first body portion 42, that is, from the position continuous from the first body portion 42 to the inclined body portion 44.

**[0014]** The dust-collecting unit 22 communicates with the suction side of the electric blower 23 to catch and collect the dust and dirt sucked by the operation of the electric blower 23. The dust-collecting unit 22 is, for example, a cyclone-separating-type dust-collecting cup which centrifuges (performs cyclone separation) from air the dust and dirt sucked along with air by the operation of the electric blower 23. The dust-collecting unit 22 also includes a dust-collecting-unit locking part 47 for locking the dust-collecting unit 22 to the body portion 21. The

dust-collecting-unit locking part 47 is arranged, in the present embodiment as an example, at an end portion of the dust-collecting unit 22, but may be arranged on the side of the body portion 21. In the present embodiment, the dust-collecting-unit locking part 47 is locked and held by the attaching-and-holding part 45. In addition, the dust-collecting unit 22 includes a dust suction port 48 and a dust exhaust port 49. The dust suction port 48 and the dust exhaust port 49 respectively communicate with the first communicating port 31 and the second communicating port 32 in the state where the dust-collecting unit 22 is attached to the body portion 21. Accordingly, the dust-collecting unit 22 communicates with the suction side of the electric blower 23 in the state of being attached to the body portion 21. The dust-collecting unit 22 is also connected to the downstream side of the main body connecting port 26 (air path element 16) in the state of being attached to the body portion 21.

**[0015]** The electric blower 23 includes an electric motor and a fan to be pivoted by the electric motor. For example, a brushless motor is used as the electric motor. Also, the electric blower 23 is housed in the inclined body portion 44.

**[0016]** The control unit 24 is a control board including, for example, a microcomputer and the like. The control unit 24 includes a driving control part which makes, for example, the electric blower 23 or the like operate based on the setting made by a user via the setting button 28. The control unit 24 may include a charging circuit part such as a constant current circuit which receives power from an external power source such as a commercial AC power source to charge the secondary battery 25.

**[0017]** The secondary battery 25 is, for example, a battery pack including a plurality of batteries.

**[0018]** The main body connecting port 26 serves as a suction port when the vacuum cleaner 11 is used as a handy-type cleaner. The main body connecting port 26 also serves as a communicating port which communicates between the air path element 16 and the cleaner main body 15 when the vacuum cleaner 11 is used as a stick-type cleaner. The main body connecting port 26 is located on the front end portion of the body portion 21. That is, the main body connecting port 26 is arranged on the front portion of the cleaner main body 15. In an example, the main body connecting port 26 is opened on the front end portion of the first body portion 42. Accordingly, the main body connecting port 26 is located below and in front of the dust-collecting unit 22.

**[0019]** The handle 27 is located in the upper portion of the cleaner main body 15 (body portion 21). In addition, on the upper portion of the handle 27, the setting button 28 is arranged.

**[0020]** The setting button 28 is located, for example, somewhat closer to the front side of the handle 27. Then, the setting button 28 is enabled to be pushed for operation by the thumb or the like of user's hand gripping the handle 27.

**[0021]** The first communicating port 31 is located on the upper portion of the first body portion 42. Likewise, the second communicating port 32 is located on the upper portion of the first body portion 42. Accordingly, the first communicating port 31 and the second communicating port 32 are located on the upper portion of the cleaner main body 15 (body portion 21). The first communicating port 31 and the second communicating port 32 are also opened along a direction crossing with the longitudinal direction of the cleaner main body 15 (body portion 21). Then, the first communicating port 31 and the second communicating port 32 are aligned front and rear. The first communicating port 31 and the second communicating port 32 are further designed to be communicated with each other via the dust-collecting unit 22 in the state where the dust-collecting unit 22 is attached to the body portion 21. The second communicating port 32 may be covered with a filter 51.

**[0022]** The exhaust port 33 corresponds to a downstream end portion of the exhaust air path 37. The exhaust port 33 is located on each of the both side portions of the first body portion 42. Accordingly, the exhaust port 33 is located somewhat closer to the front side of the cleaner main body 15 (body portion 21). In other words, the exhaust port 33 is located in front of the electric blower 23. Accordingly, the exhaust port 33 is located in the periphery of the main body connecting port 26. The exhaust port 33 is located also above the connecting port 34. It is noted that the exhaust port 33 may be covered with an unshown filter.

**[0023]** The connecting port 34 is an attached portion where the attachment 17 is attached and detached. The connecting port 34 also corresponds to a downstream end of the blower air path 38. The connecting port 34 is located on the lower portion of the first body portion 42. Accordingly, the connecting port 34 is located somewhat closer to the front side of the cleaner main body 15 (body portion 21). In other words, the connecting port 34 is located in front of the electric blower 23. The connecting port 34 is located also below the exhaust port 33. In an example, the connecting port 34 is located between the exhaust ports 33 located on the both sides. The connecting port 34 is also opened on the lower portion (at the bottom) of the body portion 21. The connecting port 34 is further formed, in the present embodiment as an example, in an ellipse (elliptical) shape elongated in the back-and-forth direction (Fig. 3). The connecting port 34 is located also behind the main body connecting port 26. The connecting port 34 is located also behind the suction air path 35. The connecting port 34 is located also below the dust-collecting unit 22. In addition, the connecting port 34 is located between the first communicating port 31 and the second communicating port 32 as seen in the longitudinal direction (back-and-forth direction) of the cleaner main body 15 (body portion 21). Further, on the inner edge of the connecting port 34, a locking-receiving part 53 where the locking part 40 locks the switching valve 39 is arranged. Then, on the inner edge of the connecting port 34, an unshown attachment locking-receiving part

where the attached attachment 17 is locked is arranged.

**[0024]** In the present embodiment, the locking-receiving part 53 is arranged at the rear portion of the inner edge of the connecting port 34. The locking-receiving part 53 is arranged to project in a claw shape toward the inside of the connecting port 34. That is, in the present embodiment, the locking-receiving part 53 is arranged to project forward in a claw shape.

**[0025]** The suction air path 35 is formed along the back-and-forth direction. The suction air path 35 is located inside the first body portion 42. Accordingly, the suction air path 35 is located in front of and away from the electric blower 23. The suction air path 35 is located also in front of the connecting port 34. Accordingly, the connecting port 34 is located between the suction air path 35 and the electric blower 23. In addition, the suction air path 35 is bent so that the downstream side thereof is directed to the first communicating port 31, that is, upward.

**[0026]** The communicating air path 36 is located above the electric blower 23 and formed along the up-and-down direction.

**[0027]** The exhaust air path 37 and the blower air path 38 may be individually different air paths, or may be configured to have a partially common air path. In the present embodiment, the exhaust air path 37 and the blower air path 38 are configured to have a common air path 55 in the upstream side. That is, in the present embodiment, the vacuum cleaner 11 includes the air path 55 which is arranged in the body portion 21 and communicates with the exhaust side of the electric blower 23. In addition, the air path 55 is configured so as to, upon the opening/closing of the connecting port 34 by the switching valve 39, be alternatively (selectively) changed to serve as the exhaust air path 37 or the blower air path 38. The upstream side of the air path 55 is located on the rear portion of the electric blower 23, while the downstream side thereof is located in front of the electric blower 23. That is, the air path 55 (the upstream sides of the exhaust air path 37 and the blower air path 38) is formed from the rear portion of the electric blower 23 over to the front of the electric blower 23. Accordingly, the exhaust air path 37 is located partially in front of the electric blower 23. Likewise, the blower air path 38 is located partially in front of the electric blower 23. In addition, the air path 55 includes in the downstream end thereof a switching port 56 to be opened and closed by the switching valve 39. Further, in the present embodiment, at least the downstream side of the air path 55 is partitioned by a duct 57.

**[0028]** The switching port 56 communicates between the air path 55 and the exhaust port 33. That is, the switching port 56 partially forms the exhaust air path 37. Also, the switching port 56 is located above the connecting port 34. That is, the switching port 56 and the connecting port 34 are aligned up and down. Accordingly, the switching port 56 is located in front of the electric blower 23. The switching port 56 is located also between the suction air path 35 and the electric blower 23. Then, the switching port 56 is located in the periphery of the connecting port 34.

**[0029]** The duct 57 is located in front of the electric blower 23. The duct 57 is located also above the connecting port 34. The duct 57 further includes in the downstream end of the air path 55 a facing surface 59 as a facing part arranged along the direction crossing with (orthogonal to) the direction of air flowing through the air path 55. Also on the duct 57, the switching port 56 is opened.

**[0030]** The facing surface 59 is located above the connecting port 34. Accordingly, the facing surface 59 is located so as to face the upper portion of the switching valve 39. Also, the facing surface 59 is formed so as to be inclined upward to the back direction. On the facing surface 59, the switching port 56 is further opened (Fig. 4). In the present embodiment, the switching port 56 is arranged so as to penetrate through the facing surface 59 in the thickness direction. Accordingly, the switching port 56 is located on the front end portion of the duct 57.

**[0031]** The switching valve 39 serves to alternatively (selectively) switch between the exhaust air path 37 and the blower air path 38 by opening/closing the connecting port 34. In the present embodiment, the switching valve 39 serves to alternatively (selectively) switch between the exhaust air path 37 and the blower air path 38 by closing one of the connecting port 34 and the switching port 56. That is, the switching valve 39 is configured so as to make the exhaust of the electric blower 23 flow through the exhaust air path 37 by opening the switching port 56 while closing the connecting port 34, and to make the exhaust of the electric blower 23 flow through the blower air path 38 by closing the switching port 56 while opening the connecting port 34. Accordingly, the switching valve 39 is configured to substantially completely, so to speak, switch between the exhaust air path 37 and the blower air path 38. In other words, the exhaust of the electric blower 23 flows through only one of the exhaust air path 37 and the blower air path 38 switched by the switching valve 39, while the exhaust thereof does not flow through the other. That is, in the present embodiment, switching between the exhaust air path 37 and the blower air path 38 refers to the state where only one of these is opened and the other is substantially blocked.

**[0032]** The switching valve 39 is a valve body including a pivotal shaft 39a in the front end side corresponding to the downstream side of the exhaust of the electric blower 23. That is, the switching valve 39 is configured to pivot for opening and closing the connecting port 34 and the switching port 56. The pivotal shaft 39a is arranged, for example, on the lower portion of the front side of the switching port 56 in the duct 57. Accordingly, the switching valve 39 is arranged so as to pivot in the up-and-down (back-and-forth) direction. In other words, the switching valve 39 pivots toward the downstream side with the downstream side of the exhaust of the electric blower 23 as the center, so as to open the connecting port 34 and close the switching port 56. Also, the switching valve 39 includes a connecting-port closing part 61 capable of

closing the connecting port 34. The switching valve 39 further includes a contacting surface 62 which is a contacting part to be contact with the attachment 17 attached to the connecting port 34. In the present embodiment, the switching valve 39 further includes a switching-port closing part 63 capable of closing the switching port 56. The switching valve 39 also includes a seal member 64. The switching valve 39 further includes an insertion port 65 where the locking part 40 operates. In the present embodiment, the switching valve 39 also includes a space 66 as a fixing-means arrangement part (a fixing-part arrangement part) where the locking part 40 is arranged. In addition, the switching valve 39 receives biasing force from a spring 67 as switching-biasing means (a switching biaser).

**[0033]** The connecting-port closing part 61 is a part serving as a lid of the connecting port 34. That is, the connecting-port closing part 61 is the part to be exposed when being fitted in the connecting port 34 in the state where the switching valve 39 closes the connecting port 34. The connecting-port closing part 61 forms the lower portion of the switching valve 39. That is, the connecting-port closing part 61 is located below the switching-port closing part 63. Also, the connecting-port closing part 61 is formed, for example, in a square plate shape.

**[0034]** The contacting surface 62 is located in the lower front portion of the switching valve 39. In an example, the contacting surface 62 is arranged on the connecting-port closing part 61. The contacting surface 62 is also located somewhat closer to the front end side of the switching valve 39 corresponding to the downstream side of the exhaust of the electric blower 23. In other words, the contacting surface 62 is located in the periphery of the pivotal shaft 39a of the switching valve 39. Further, the contacting surface 62 is inclined upward toward the front side. Accordingly, the contacting surface 62 is formed along the radial direction of the pivotal shaft 39a of the switching valve 39.

**[0035]** The switching-port closing part 63 is a part serving as the lid of the switching port 56. The switching-port closing part 63 is a part to be fitted in the switching port 56 in the state where the switching valve 39 closes the switching port 56. The switching-port closing part 63 forms the upper portion of the switching valve 39.

**[0036]** It is noted that the switching-port closing part 63 is, in the present embodiment, formed on the switching valve 39 integrally with the connecting-port closing part 61, however, in the case where opening/closing means (an opening/closing body) separate from the switching valve 39 closes and opens the switching port 56 while being linked with the closing/opening of the switching valve 39, the switching-port closing part 63 may be configured as an individual element separate from the switching valve 39 as long as being arranged on the opening/closing means. Alternatively, in the case where switching means (a switching part) switches between the exhaust air path 37 and the blower air path 38 arranged separately, the switching-port closing part 63 may not be required in some cases.

**[0037]** The seal member 64 serves to close the gap between the switching valve 39 and the connecting port 34. In the present embodiment, the seal member 64 serves to close the gap between the switching valve 39 and the connecting port 34 and the gap between the switching valve 39 and the switching port 56. The seal member 64 is attached so as to surround the outer edge of the switching valve 39.

**[0038]** The insertion port 65 is opened on the connecting-port closing part 61. That is, the insertion port 65 is located on the lower portion of the switching valve 39 so as to be exposed from the connecting port 34. The insertion port 65 is arranged somewhat closer to the rear side of the switching valve 39. That is, the insertion port 65 is located in the upstream side of the exhaust of the electric blower 23 and apart from the pivotal shaft 39a of the switching valve 39. In the present embodiment, the insertion port 65 is located behind and apart from the contacting surface 62.

**[0039]** The space 66 is arranged above the bottom surface of the switching valve 39. In the present embodiment, the space 66 is arranged between the connecting-port closing part 61 and the switching-port closing part 63. The space 66 is arranged in the periphery of the outer edge of the switching valve 39. That is, the space 66 is arranged at a position facing the inner edge of the connecting port 34, that is, in the present embodiment, a position facing the locking-receiving part 53. Also, the space 66 is formed so as to be hollowed in the direction separating from the inner edge of the connecting port 34. In the present embodiment, the space 66 is arranged somewhat closer to the rear portion of the switching valve 39. Accordingly, the space 66 is formed so as to spread in the back-and-forth direction. The space 66 communicates with the insertion port 65. In addition, the space 66 includes a guide part 66a which guides the locking part 40 in the direction of moving toward/away from the locking-receiving part 53. In the present embodiment, the guide part 66a is bent, for example, so as to gradually project upward from the rear portion to the front portion.

**[0040]** The spring 67 serves to provide biasing force to the switching vale 39 to the direction for closing the connecting port 34. In the present embodiment, the spring 67 serves to provide biasing force to the switching valve 39 to the direction for opening the switching port 56. That is, the spring 67 provides biasing force to the switching valve 39 to the direction for pivoting downward. In the present embodiment, for example, a torsional spring is used as the spring 67.

**[0041]** In addition, the locking part 40 is arranged on one of the body portion 21 and the switching valve 39 so as to lock and fix the switching valve 39 to the body portion 21. In the present embodiment, the locking part 40 is arranged on the switching valve 39. Specifically, the locking part 40 is arranged in the space 66 so as to face the insertion port 65. The locking part 40 is arranged also movably to the switching valve 39. The locking part 40

further includes a pressed part 40a as a fixing-means body (fixing-part body). The locking part 40 also includes a locking claw part 40b to be locked and fixed to the locking-receiving part 53. The locking part 40 further includes a guided part 40c to be guided by the guide part 66a. Also, the locking part 40 receives biasing force from a spring 69 serving as biasing means (a biaser). In addition, the locking part 40 is configured to, when the attachment 17 is not attached to the connecting port 34, hold the state of the switching valve 39 locked and fixed to the locking-receiving part 53, by use of the biasing force of the spring 69, and while to, when the attachment 17 is attached to the connecting port 34, operate against the biasing force of the spring 69 to disengage the locking to the locking-receiving part 53, resulting in releasing the fixing of the switching valve 39.

**[0042]** The pressed part 40a is a part to be pressed by the attachment 17 attached to the connecting port 34, and to make the locking part 40 operate. The pressed part 40a is arranged on the lower portion facing the insertion port 65.

**[0043]** The locking claw part 40b is a part to be locked to and disengaged from the locking-receiving part 53. The locking claw part 40b is arranged to project in a claw shape at a rear portion facing the locking-receiving part 53.

**[0044]** The guided part 40c is a part for setting, along with the guide part 66a, the operating direction of the locking part 40 when the pressed part 40a is pressed by the attachment 17 attached to the connecting port 34. The guided part 40c is arranged somewhat closer to the rear side of the lower portion facing the guide part 66a.

**[0045]** The spring 69 provides biasing force to the locking part 40 toward the switching valve 39 (connecting-port closing part 61 (insertion port 65)). That is, the spring 69 provides biasing force to the locking part 40 downward. In the present embodiment, a coil spring is used as the spring 69. In addition, the lower edge of the spring 69 is held on the upper portion of the locking part 40, while the upper edge thereof is held on the lower portion of the switching-port closing part 63, and the spring 69 is located between the locking part 40 and the switching valve 39.

**[0046]** Meanwhile, the air path element 16 contains a partitioned air path, and communicates with the suction side of the electric blower 23 in the state of being connected to the cleaner main body 15. The air path element 16 includes an extension pipe 71 in a longitudinal shape. The air path element 16 may also include a suction port body in the tip side (upstream side). Any type is available as the suction port body, but in the present embodiment as an example, a floor brush 72 is used as the suction port body. It is noted that the air path element 16 is not an essential element.

**[0047]** The base end side of the extension pipe 71 is connected to the cleaner main body 15 so as to be airtightly connected to the dust-collecting unit 22. In an example, the base end side of the extension pipe 71 is connected to the main body connecting port 26. The extension pipe 71 is also detachably held by a clamp 74 arranged on the cleaner main body 15 (body portion 21).

**[0048]** The floor brush 72 includes a casing body 76. The floor brush 72 also includes a connecting pipe 77. The casing body 76 is formed in a laterally long shape, that is, in a shape elongated in the left-and-right direction. Also, an unshown suction port is opened on the lower portion facing a cleaning-obj ect surface of the casing body 76. The connecting pipe 77 is also pivotably connected to the casing body 76. Further, the connecting pipe 77 communicating with the suction port is airtightly connected to the tip side of the extension pipe 71. Then, the floor brush 72 is connected to the tip side of the extension pipe 71. In an example, the connecting pipe 77 of the floor brush 72 is inserted and connected to the extension pipe 71. The floor brush 72 is also designed to be held in the connected state to the extension pipe 71 by a floor brush clamp 79 arranged on the extension pipe 71.

**[0049]** Meanwhile, the attachment 17 is a blower attachment which uses the exhaust of the electric blower 23 when the vacuum cleaner 11 is used as a blower. The attachment 17, as shown in Fig. 7 and Fig. 8, is formed substantially in a cylindrical shape. That is, the attachment 17 includes an exhaust communicating port 81 located on the base end side thereof and a discharge port 82 located on the tip side thereof. The attachment 17 also includes an attachment fitting part 85 to be inserted into and extracted from the connecting port 34. The attachment 17 further includes a releasing part 86 which is capable of releasing the fixing of the switching valve 39 by the locking part 40. The attachment 17 also includes an attachment locking part 87 which locks the attachment 17 to the connecting port 34. The attachment 17 further includes an operated part 88 which makes the attachment locking part 87 operate. In addition, the attachment 17 is configured to, when being attached to the connecting port 34, release the fixing of the switching valve 39 by the locking part 40 and open the connecting port 34, and thereby make the switching valve 39 operate to switch from the exhaust air path 37 to the blower air path 38. That is, the attachment 17 is detachable to/from the connecting port 34 opened by the switching valve 39.

**[0050]** The exhaust communicating port 81 is an opening which communicates with the blower air path 38 in the state where the attachment 17 is attached to the connecting port 34. The exhaust communicating port 81 is opened upward as an example.

**[0051]** The discharge port 82 is an opening which communicates with the exhaust communicating port 81 and discharges the air taken in the attachment 17 from the exhaust communicating port 81. The discharge port 82 is opened in the back-and-forth direction. The discharge port 82 is also formed wide in the up-and-down direction and narrow in the left-and-right direction (width direction). That is, the discharge port 82 is formed in an ellipse (elliptical) shape having its longitudinal direction in the up-

and-down direction. The discharge port 82 is further set to have a smaller opening area compared to the main body connecting port 26. The discharge port 82 is also set to have a smaller opening area compared to the exhaust communicating port 81. Accordingly, the attachment 17 is formed to have an air path area gradually smaller from the upstream side to the downstream side. In addition, the discharge port 82 is located below (right under) and in front of the main body connecting port 26 in the state where the attachment 17 is attached to the connecting port 34. That is, the discharge port 82 is located in the periphery of the main body connecting port 26.

**[0052]** The attachment fitting part 85 is arranged to project upward in a rib shape so as to surround the exhaust communicating port 81. That is, the attachment fitting part 85 is located somewhat closer to the base end side (rear end side) of the attachment 17. Also, the attachment fitting part 85 is formed in a shape to be fitted in the connecting port 34. That is, the attachment fitting part 85 is formed in an ellipse (elliptical) shape elongated in the back-and-forth direction (the axial direction of the attachment 17). The attachment fitting part 85 further has a reinforcing rib 85a arranged, for example, along the back-and-forth direction. The rib 85a is arranged to be spanned between the front and rear portions of the exhaust communicating port 81 along the central part in the left-and-right direction thereof.

**[0053]** The releasing part 86 releases the locking and fixing of the switching valve 39 by the locking part 40 when the attachment 17 is attached to the connecting port 34. Specifically, the releasing part 86 is inserted in the insertion port 65 when the attachment 17 is attached to the connecting port 34, and thus pushes the locking part 40 (pressed part 40a) against the biasing force of the spring 69. The releasing part 86 is a protrusion projecting upward as an example. The releasing part 86 is arranged on the attachment fitting part 85. More specifically, the releasing part 86 is arranged on the rib 85a to project.

**[0054]** The attachment locking part 87 is a part for locking and fixing the attachment 17 to the cleaner main body 15 (connecting port 34) when being inserted into and locked to the attachment locking-receiving part located on the inner edge of the connecting port 34. The attachment locking part 87 in a claw shape is arranged respectively left and right on the attachment fitting part 85. The attachment locking part 87 is arranged movably to advance and retreat in the direction crossing with (orthogonal to) the attaching direction of the attachment 17 to the connecting port 34 (insertion direction of the attachment fitting part 85 to the connecting port 34). The attachment locking part 87 further receives to the advancing direction the biasing force of a spring serving as unshown attachment biasing means (an attachment biaser).

**[0055]** The operated part 88 serves to make the attachment locking part 87 retreat against the biasing force of the spring upon user's operation. The operated part 88 is arranged corresponding to the attachment locking part 87. That is, the operated part 88 is arranged respectively on the left side and the right side of the attachment 17. Accordingly, the operated part 88 is capable of making the attachment locking part 87 operate when a user operates the both operated parts 88 by pushing from the left side and the right side. The operated part 88 is also located below and away from the attachment fitting part 85 (attachment locking part 87).

**[0056]** The above-described one embodiment will be described in terms of its operation.

**[0057]** In the case where the vacuum cleaner 11 is used as a handy-type suction cleaner (in one sucking state (Fig. 5)), only of the cleaner main body 15 with the dust-collecting unit 22 attached to the body portion 21 is used. That is, the cleaner main body 15 is used in the state where the air path element 16 is detached from the cleaner main body 15. In this case, an air path element which is different from the air path element 16 including the extension pipe 71 and the floor brush 72, as an example, and shorter than the air path element 16, for example, a gap nozzle or the like, may be connected to the main body connecting port 26. In this state, as shown in Fig. 1(a), the connecting port 34 is covered by the switching valve 39 (connecting-port closing part 61), and the seal member 64 is pressed to the inner edge of the connecting port 34, thereby closing the connecting port 34 without any gap, and also the exhaust air path 37 is selected. The switching valve 39 holds the state where the connecting port 34 is closed and the locking claw part 40b of the locking part 40 is locked to the locking-receiving part 53.

**[0058]** Then, in the vacuum cleaner 11, when a user gripping the handle 27 operates the setting button 28 to set an operation, the control unit 24 drives the electric blower 23 according to the set operation. In addition, by use of the negative pressure generated by the driving of the electric blower 23, dust and dirt on a cleaning-object surface is sucked along with air while the user directs to the cleaning-object surface the main body connecting port 26 or the air path element 16 connected to the main body connecting port 26, and moves it on the cleaning-object surface in the back-and-forth direction, the oblique direction and other directions.

**[0059]** In overview, the dust-including air is sucked from the main body connecting port 26 into the dust-collecting unit 22, and dust and dirt are separated from the air and caught and collected, and also the air after dust and dirt are separated is sucked into the electric blower 23. Then the sucked air is discharged outside the cleaner main body 15 from the exhaust port 33 via the exhaust air path 37. More specifically, the dust-including air is sucked from the main body connecting port 26 via the suction air path 35, the first communicating port 31 and the dust suction port 48 into the dust-collecting unit 22, and then dust and dirt are separated from the air in the dust-collecting unit 22. The air after dust and dirt are sep-

arated is discharged from the dust-collecting unit 22 via the dust exhaust port 49 and the second communicating port 32 to the communicating air path 36 of the body portion 21, sucked from the communicating air path 36 into the electric blower 23 for cooling the electric blower 23, and then discharged outside the cleaner main body 15 from the exhaust port 33 via the exhaust air path 37 (switching port 56).

**[0060]** Also, in the case where the vacuum cleaner 11 is used as a stick-type suction vacuum cleaner (in another sucking state (Fig. 6)), the air path element 16 is connected to the cleaner main body 15 with the dust-collecting unit 22 attached to the body portion 21. In this state, the floor brush 72 communicates with the suction side of the electric blower 23 (that is, communicates with the dust-collecting unit 22 via the extension pipe 71, and the main body connecting port 26, the suction air path 35, the first communicating port 31 and the dust suction port 48 of the cleaner main body 15, and further communicates with the suction side of the electric blower 23 via the dust exhaust port 49 of the dust collecting unit 22, and the second communicating port 32 and the communicating air path 36 of the cleaner main body 15).

**[0061]** Further, in the vacuum cleaner 11, when a user gripping the handle 27 puts the floor brush 72 on a cleaning-object surface, and operates the setting button 28 of the handle 27 to set an operation, the control unit 24 drives the electric blower 23 according to the set operation. In addition, by use of the negative pressure generated by the driving of the electric blower 23, dust and dirt on the cleaning-object surface is sucked along with air from the suction port of the floor brush 72 while the user moves the floor brush 72 on the cleaning-object surface in the back-and-forth direction, the oblique direction and other directions alternatively.

**[0062]** The sucked dust-including air is taken from the floor brush 72 into the cleaner main body 15 (body portion 21) via the extension pipe 71, and dust and dirt are separated from the air and caught and collected in the dust-collecting unit 22, likewise in the above-described one sucking state.

**[0063]** When cleaning is finished, a user operates the setting button 28 to make the control unit 24 stop the electric blower 23.

**[0064]** Meanwhile, in the case where the vacuum cleaner 11 is used as a blower (in one or another blowing state (Fig. 10 or Fig. 11)), a user first attaches the attachment 17 to the cleaner main body 15. In this case, the releasing part 86 of the attachment 17 releases the locking and fixing of the switching valve 39 to push up the switching valve 39, and also the attachment 17 is locked and fixed to the connecting port 34, and thereby the pushed-up switching valve 39 is held in the state of closing the switching port 56, and thus the blower air path 38 is selected. More specifically, as shown in Fig. 9, when a user aligns the attachment fitting part 85 of the attachment 17 with the connecting port 34 of the cleaner main body 15 and presses the attachment fitting part 85 into the connecting port 34, the releasing part 86 first is inserted in the insertion port 65, and the locking part 40 which is housed in the space 66 so that the pressed part 40a faces the insertion port 65 is pushed up against the biasing force of the spring 69. In this case, the guided part 40c slidingly contacts with the guide part 66a of the switching valve 39, and thus the locking part 40 moves forward in the space 66, and thereby the locking claw part 40b retreats forward with respect to the locking-receiving part 53 and the locking and fixing of the switching valve 39 is released. When the attachment fitting part 85 of the attachment 17 is further pressed into the connecting port 34, the switching valve 39 is pushed up against the biasing force of the spring 67. Then, the attachment locking part 87 of the attachment 17 retreats against the biasing force of the spring due to the sliding contact with the inner edge of the connecting port 34, and recovers to the projecting state by the biasing force of the spring at the position of the attachment locking-receiving part located on the inner edge of the connecting port 34, so that the attachment locking part 87 is inserted into and locked at the attachment locking-receiving part. Accordingly, the attachment 17 is locked and fixed to the connecting port 34, resulting in being attached to the cleaner main body 15. In this state, as shown in Fig. 1(b), when the contacting surface 62 contacts with the upper edge portion of the attachment fitting part 85, the switching valve 39 is supported from below, and the switching port 56 is covered by the switching valve 39 (switching-port closing part 63), and also the seal member 64 is pressed to the inner edge of the switching port 56 so that the switching port 56 is closed without any gap, and thus the blower air path 38 is selected. When the exhaust communicating port 81 is connected to the connecting port 34, the attachment 17 is also communicated with the blower air path 38. It is noted that the releasing part 86 of the attachment 17 is extracted from the insertion port 65 when the switching valve 39 pivots upward, and thereby the locking part 40 of the switching valve 39 recovers due to the biasing force of the spring 69.

**[0065]** Then, in one blowing state where the dust-collecting unit 22 is used, in the vacuum cleaner 11, when a user gripping the handle 27 operates the setting button 28 to set an operation, the control unit 24 drives the electric blower 23 according to the set operation. In addition, by use of the exhaust (exhaust pressure) generated by the driving of the electric blower 23, dust and dirt on a cleaning-object surface is blown off while the user directs the discharge port 82 of the attachment 17 to the cleaning-object surface and moves the discharge port 82 in the back-and-forth direction, the oblique direction and other directions to the cleaning-object surface.

**[0066]** In this case, in overview, the vacuum cleaner 11 sucks air from the main body connecting port 26, sucks the sucked air via the dust-collecting unit 22 into the electric blower 23 then taking from the electric blower 23 via the blower air path 38, discharges the air outside the cleaner main body 15 from the connecting port 34, and

blows off the air via the discharge port 82 from the attachment 17 connected to the connecting port 34. More specifically, the air sucked from the main body connecting port 26 is sucked into the dust-collecting unit 22 via the suction air path 35, the first communicating port 31 and the dust suction port 48. After the slightly-included dust and dirt are separated from the air in the dust-collecting unit 22, the air is discharged from the dust-collecting unit 22 to the body portion 21 via the dust-exhaust port 49 and the second communicating port 32, and sucked from the communicating air path 36 into the electric blower 23 to cool the electric blower 23. Then, the air is discharged outside the cleaner main body 15 from the connecting port 34 via the blower air path 38, and flows while being gradually squeezed to the discharge port 82 from the exhaust communicating port 81 communicating with the connecting port 34, and is jetted out from the discharge port 82.

**[0067]** Also, in another blowing state where the dust-collecting unit 22 is not used, in overview, the vacuum cleaner 11 sucks air from the second communicating port 32 to the communicating air path 36 then taking the sucked air from the electric blower 23 via the blower air path 38, discharges the air outside the cleaner main body 15 from the connecting port 34, and blows out the air via the discharge port 82 from the attachment 17 connected to the connecting port 34. The dust and dirt slightly included in the sucked air is caught and collected by the filter 51 arranged on the second communicating port 32. It is noted that the air flow until being blown out from the discharge port 82 of the attachment 17 in the downstream side of the second communicating port 32 is the same as the above, and thus the description thereof is omitted.

**[0068]** When cleaning is finished, a user operates the setting button 28 to make the control unit 24 stop the electric blower 23.

**[0069]** When the usage as a blower is finished, a user detaches the attachment 17 from the cleaner main body 15. Specifically, when a user pushes the operated parts 88 respectively located on the left and right sides from the left side and the right side, the attachment locking part 87 of the attachment 17 retreats against the biasing force of the spring so as to be detached from the attachment locking-receiving part, and thereby the locking of the attachment 17 to the cleaner main body 15 is released. Then, upon the attachment 17 being extracted downward, the attachment fitting part 85 is extracted from the connecting port 34. The biasing force of the spring 67 makes the switching valve 39 recover and opens the switching port 56, and also the connecting-port closing part 61 covers the connecting port 34, and thus the seal member 64 closes the gap between the seal member 64 and the connecting port 34. This switches from the blower air path 38 to the exhaust air path 37. The locking claw part 40b contacts with the locking-receiving part 53 when the switching valve 39 pivots downward. Also, the guided part 40c slidingly contacts with the guide part 66a of the switching valve 39, and thus the locking part 40 moves forward in the space 66, and thereby the locking claw part 40b retreats forward with respect to the locking-receiving part 53 and slidingly contacts with locking-receiving part 53. Thereafter, the locking claw part 40b recovers against the biasing force of the spring 69 at a position below the locking-receiving part 53, and thereby the switching valve 39 is locked and fixed in the state of closing the connecting port 34.

**[0070]** According to the above-described one embodiment, the switching valve 39 capable of closing/opening the connecting port 34 is locked and fixed by the locking part 40 at a position where the connecting port 34 is closed, and when the attachment 17 is attached to the connecting port 34, the fixing of the switching valve 39 by the locking part 40 is released, and the switching valve 39 operates so as to open the connecting port 34 and switch to the blower air path 38. Accordingly, only when the attachment 17 is attached, in other words, at the same time the attachment 17 is attached, the switching valve 39 opens the connecting port 34. This enables to prevent leakage of the exhaust from the connecting port 34 except when the attachment 17 is attached. That is, in the case where the vacuum cleaner 11 is used as a suction cleaner, the connecting port 34 is required to be closed. However, when the lid body is simply pressed to the connecting port 34 by biasing force of a spring or the like, there is still concern that a user may erroneously open the lid body during operation as a suction cleaner. In particular, in the case where the vacuum cleaner 11 is used as a suction cleaner, when the connecting port 34 is erroneously opened, the exhaust of the electric blower 23 can be scattered from the connecting port 34 and can blow off dust and dirt on the cleaning-object surface to be sucked because the connecting port 34 is located on the bottom portion of the body portion 21. Accordingly, the above-described configuration according to the present embodiment enables to prevent such failure.

**[0071]** When the attachment 17 is attached to the connecting port 34, the locking part 40 is operated so as to release the fixing of the switching valve 39 by the releasing part 86 of the attachment 17. Accordingly, the locking part 40 ensures to fix the switching valve 39 during when the attachment 17 is not used, to prevent dust and dirt or the like from entering in case where the connecting port 34 opens during when the attachment 17 is not used.

**[0072]** The switching valve 39 capable of opening/closing the connecting port 34 alternatively switches between the exhaust air path 37 and the blower air path 38 according to the opening/closing, and the attachment 17 is detachable to/from the connecting port 34 opened by the switching valve 39. This enables to provide, in the state where the blower air path 38 is selected, the most part of the exhaust of the electric blower 23 to the attachment 17 from the connecting port 34, not flowing to the exhaust air path 37 side. Accordingly, in the case where the vacuum cleaner 11 is used as a blower, the exhaust of the electric blower 23 is enabled to be utilized efficiently, and enough amount of the exhaust is jetted out from the at-

tachment 17, allowing to blow off dust and dirt efficiently.

**[0073]** In addition, the attachment 17 when being attached to the connecting port 34 fixes the switching valve 39 in the state where the blower air path 38 is selected. This enables to hold the switching valve 39 in the state where the blower air path 38 is selected, with a simple configuration without requiring a special configuration.

**[0074]** Also, the switching valve 39 is configured as a valve body including the pivotal shaft 39a in the downstream side of the exhaust of the electric blower 23. Accordingly, the exhaust pressure of the electric blower 23 is applied to the switching valve 39 which has pivoted to the state where the blower air path 38 is selected, in the direction where the switching valve 39 (seal member 64) is pressed to the switching port 56, therefore enabling to easily improve the sealing ability thereof.

**[0075]** The suction air path 35 is arranged in front of the electric blower 23 in the body portion 21, and the connecting port 34 is arranged between the suction air path 35 and the electric blower 23. This enables to provide efficient arrangement and also to arrange the discharge port 82 of the attachment 17 closer to the main body connecting port 26. In either case of the vacuum cleaner 11 being used as a suction cleaner which sucks dust and dirt from the main body connecting port 26 and of the vacuum cleaner 11 being used as a blower which blows off air from the discharge port 82 of the attachment 17, the cleaner main body 15 is enabled to be used substantially in the same position, thus improving the usability thereof. In addition, since the main body connecting port 26 serving as a suction port of air in the case of the vacuum cleaner 11 being used as a blower is arranged closer to the discharge port 82, the dust and dirt blown off by the air jetted out from the discharge port 82 is enabled to be sucked from the main body connecting port 26, thereby enabling to perform efficient cleaning.

**[0076]** Also, at least a part of the blower air path 38 and the exhaust port 33 are arranged in front of the electric blower 23 in the body portion 21, thus enabling to provide more efficient arrangement.

**[0077]** In addition, since the exhaust air path 37 and the blower air path 38 are configured to have the air path 55 which is partially commonly to them, the cleaner main body 15 (body portion 21) is enabled to be downsized compared to the case where these air paths are arranged separately, and further, the configuration where the switching valve 39 switches between the exhaust air path 37 and the blower air path 38 is easily realized.

**[0078]** In addition, the vacuum cleaner 11 serves as a cordless-type cleaner having the secondary battery 25 as a power source, thus enabling to further improve the usability thereof. In particular, in the case of the vacuum cleaner 11 with the second battery 25 as a power source, the electric blower 23 having lower power and/or lower volume of the exhaust is used in many cases in order to use the limited power source efficiently, compared to the vacuum cleaner using an external power source as a power source, for example, a commercial AC power source or the like. Accordingly, in the case where the vacuum cleaner 11 is used as a blower, the most exhaust of the electric blower 23 is designed to be used, thereby enabling to blow off dust and dirt even by the electric blower 23 having lower volume of the exhaust. In addition, the vacuum cleaner 11 serving as a handy-type cleaner enables to provide improved usability and also to complete the air path only with the cleaner main body 15 without forming any unnecessarily-long air path in the sucking side or the exhausting side of the electric blower 23.

**[0079]** Also in the case where the vacuum cleaner 11 is used as a blower, attachment of the dust-collecting unit 22 to the vacuum cleaner 11 enables to prevent the dust and dirt slightly included in air from being sucked into the electric blower 23. While in the case where the vacuum cleaner 11 is used as a blower without the dust-collecting unit 22, the vacuum cleaner 11 is enabled to be reduced in weight and to further strongly jet out exhaust with less air path loss because the suction air path of the electric blower 23 is shorten.

**[0080]** It is noted that, in the above-described one embodiment, the switching valve 39 is configured to be opened and closed according to the attachment of the attachment 17 to the connecting port 34. However, another configuration may be available to open and close the connecting port 34 (switch between the exhaust air path 37 and the blower air path 38) regardless of the attachment of the attachment 17 to the connecting port 34.

**[0081]** The vacuum cleaner 11 is a cordless vacuum cleaner equipped with the secondary battery 25 as a power source, but may also be a wired-type vacuum cleaner which receives power from an external power source such as a commercial AC power source.

**[0082]** While certain embodiments have been described, these embodiments have been presented by way of example only, and are not intended to limit the scope of the inventions . Indeed, the novel embodiments described herein may be embodied in a variety of other forms; furthermore, various omissions, substitutions, and changes in the form of the embodiments described herein may be made without departing from the spirit of the inventions. The accompanying claims and their equivalents are intended to cover such forms or modifications as would fall within the scope and spirit of the inventions.

## Claims

**1.** A vacuum cleaner comprising:

a body portion including an electric blower;
a dust-collecting unit communicating with a suction side of the electric blower so as to catch and collect dust and dirt by operation of the electric blower;
an exhaust port arranged on the body portion;

an exhaust air path arranged in the body portion so as to communicate between an exhaust side of the electric blower and the exhaust port;
a connecting port arranged on the body portion;
a blower air path arranged in the body portion so as to communicate between the exhaust side of the electric blower and the connecting port;
switching means arranged capable of opening and closing the connecting port, so as to switch between the exhaust air path and the blower air path according to the opening and closing; and
an attachment, when being attached to the connecting port, communicating with the blower air path upon switching by the switching means.

**2.** The vacuum cleaner according to Claim 1, the vacuum cleaner comprising:

fixing means for fixing the switching means at a position of the connecting port being closed, wherein
the attachment, upon being attached to the connecting port, releases fixing of the switching means by the fixing means so as to open the connecting port, and makes the switching means switch to the blower air path.

**3.** The vacuum cleaner according to Claim 2, wherein the attachment includes a releasing part,
the fixing means is operated by the releasing part so as to release the fixing of the switching means when the attachment is attached to the connecting port.

**4.** The vacuum cleaner according to Claim 2 or Claim 3, wherein
the attachment, when being attached to the connecting port, fixes the switching means having switched to the blower air path.

**5.** The vacuum cleaner according to Claim 1, wherein the switching means opens and closes the connecting port to alternatively switch between the exhaust air path and the blower air path, and
the attachment is detachable to and from the connecting port opened by operation of the switching means.

**6.** The vacuum cleaner according to Claim 5, wherein the attachment, when being attached to the connecting port, opens the connecting port and fixes the switching means having switched to the blower air path.

**7.** The vacuum cleaner according to any one of Claims 1 to 6, wherein
the switching means is a valve body including a pivotal shaft in a downstream side of exhaust of the electric blower.

**8.** The vacuum cleaner according to any one of Claims 1 to 7, the vacuum cleaner comprising:
a suction air path arranged in front of the electric blower in the body portion so as to communicate with the suction side of the electric blower, wherein
the connecting port is arranged between the suction air path and the electric bower.

**9.** The vacuum cleaner according to Claim 8, wherein at least a part of the blower air path and the exhaust port are located in front of the electric blower in the body portion.

**10.** The vacuum cleaner according to any one of Claims 1 to 9, wherein
the vacuum cleaner is a handy-type vacuum cleaner.

(a)

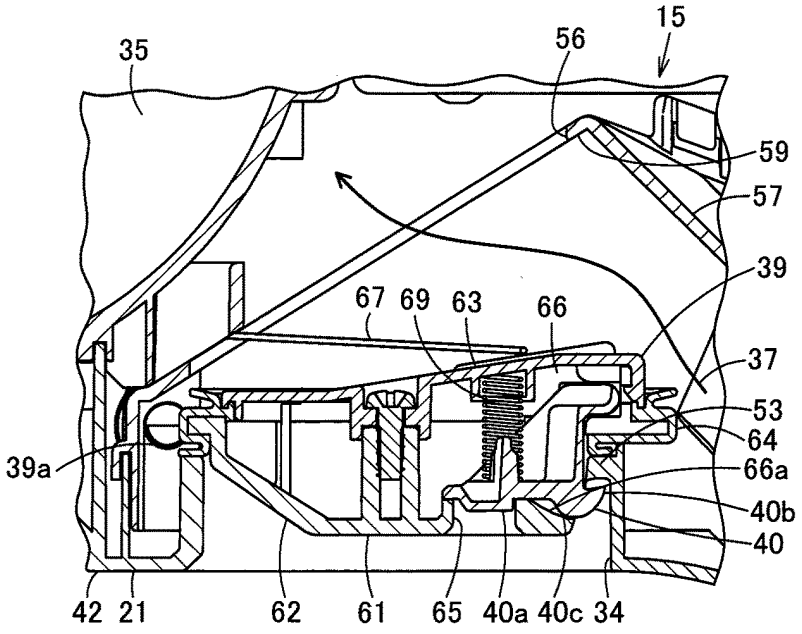
35
56
15
59
57
39
67
69
63
66
37
53
64
39a
66a
40b
40
42
21
62
61
65
40a
40c
34

(b)

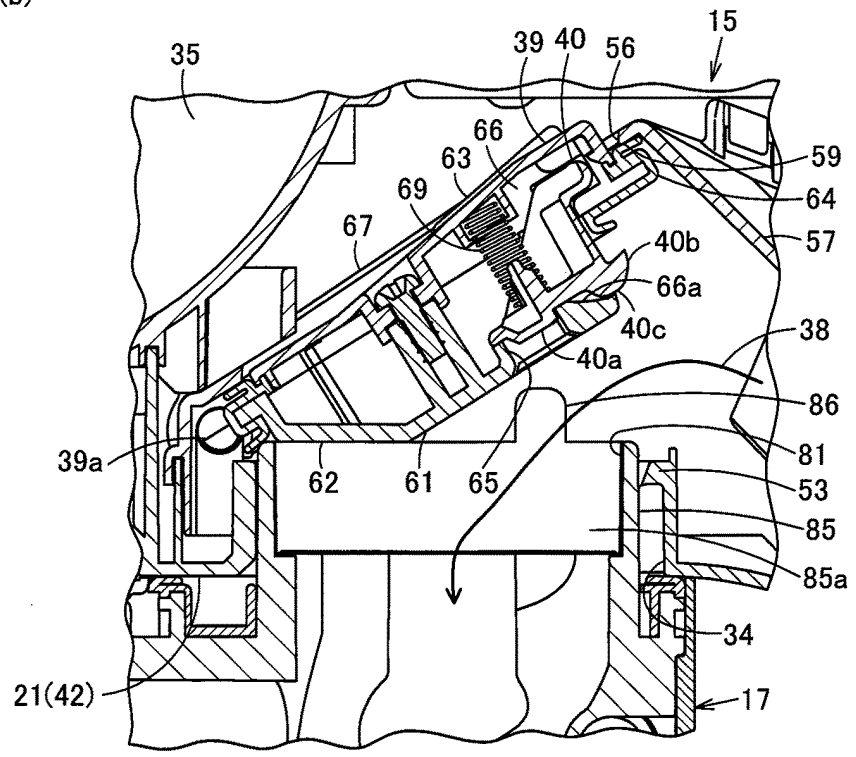
35
39
40
56
15
66
63
59
69
64
67
40b
57
66a
40c
38
40a
86
39a
81
62
61
65
53
85
85a
34
21(42)
17

FIG. 1

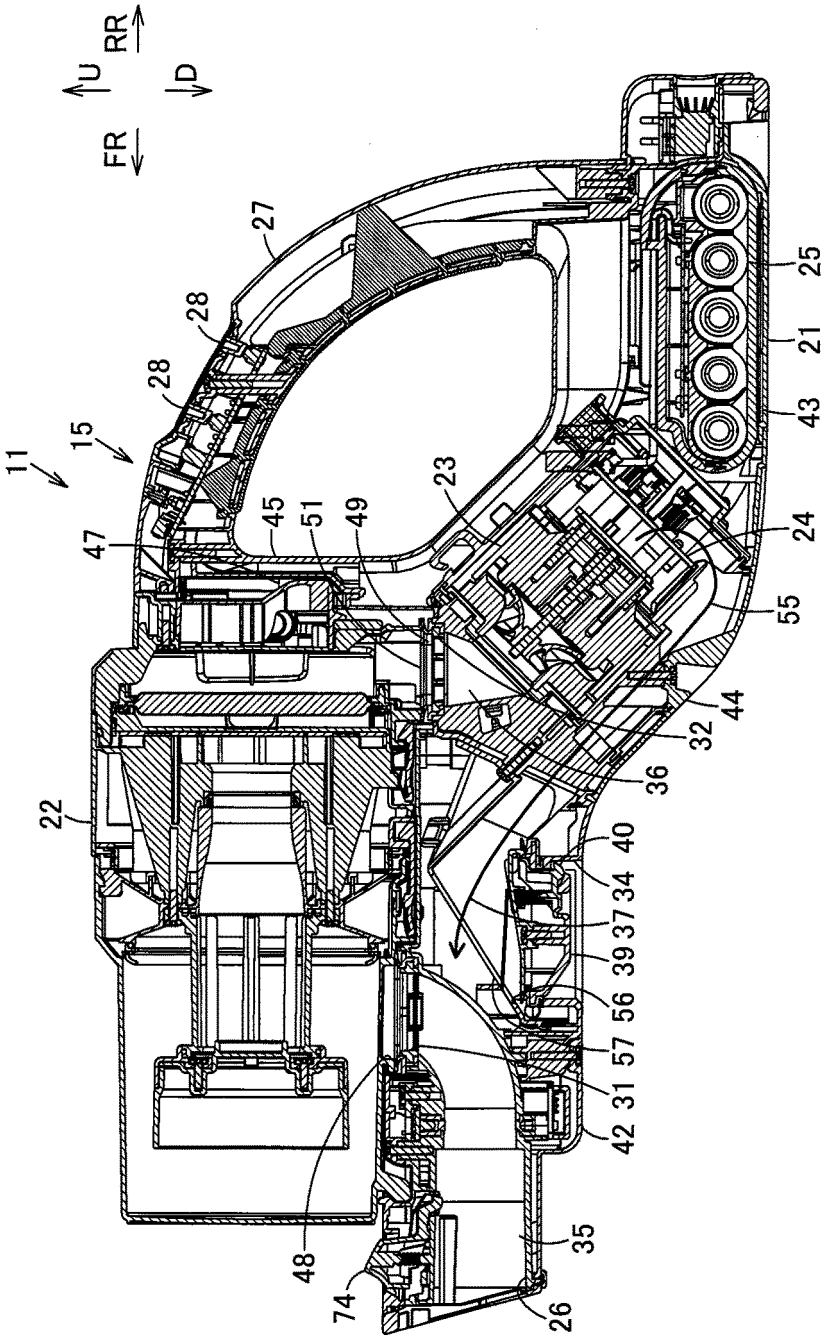
U
RR
D
FR
11
15
28
28
27
47
45
51
49
23
22
48
74
26
35
42
31
57
56
39
37
34
40
36
32
44
55
24
43
21
25

FIG. 2

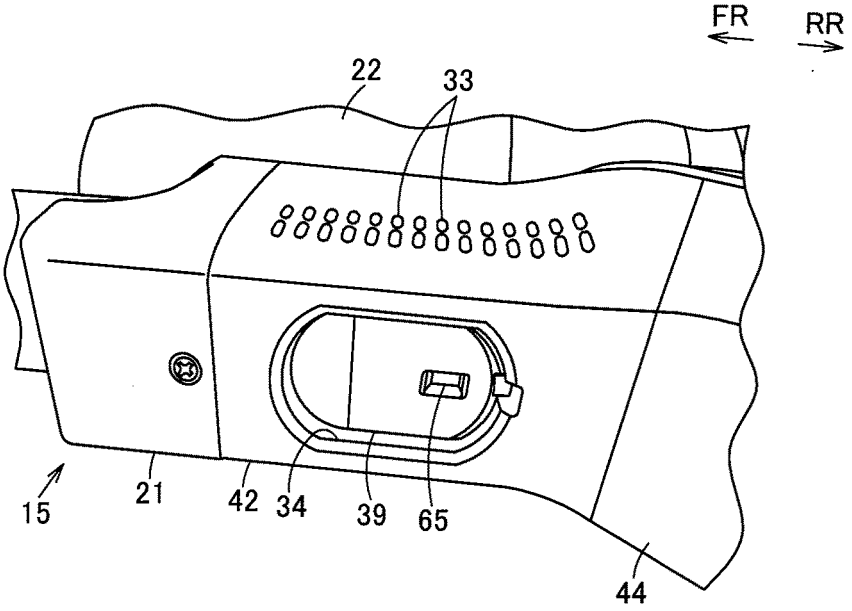
FR
RR
22
33
15
21
42
34
39
65
44

FIG. 3

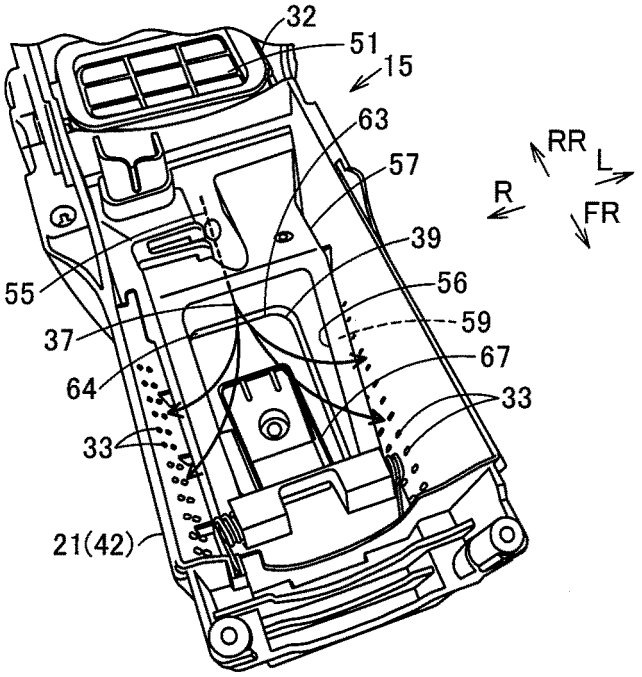
32
51
15
63
57
RR
L
R
FR
39
55
56
37
59
67
64
33
33
21(42)

FIG. 4

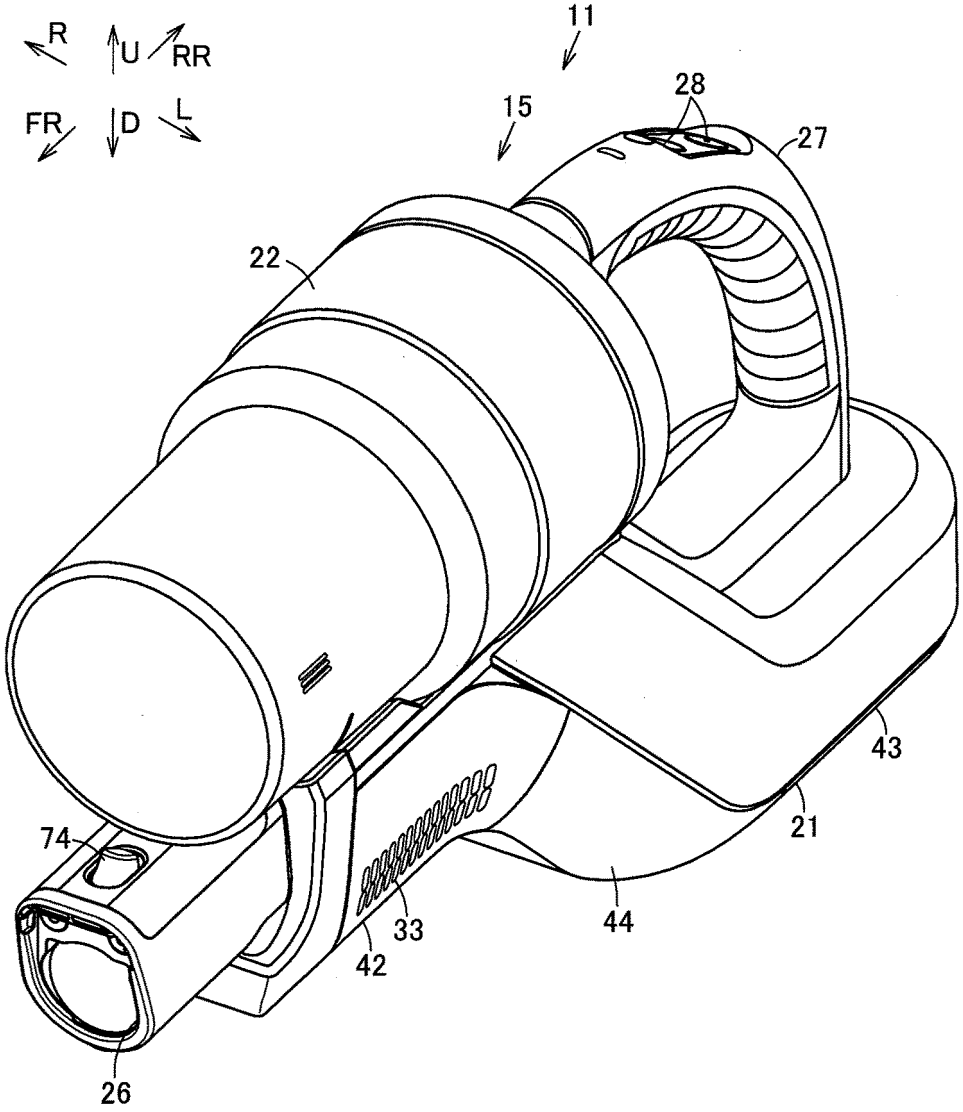


FIG. 5

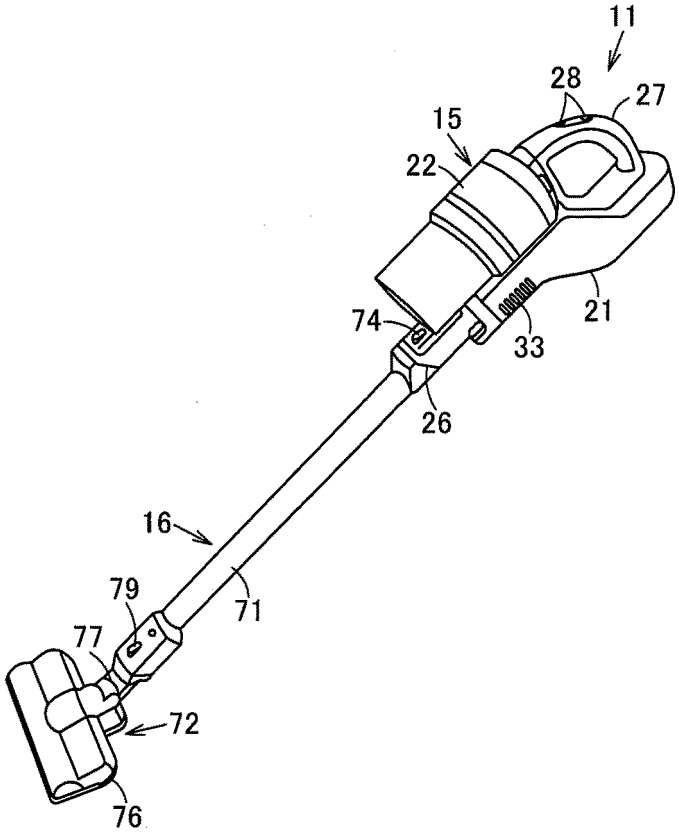


FIG. 6

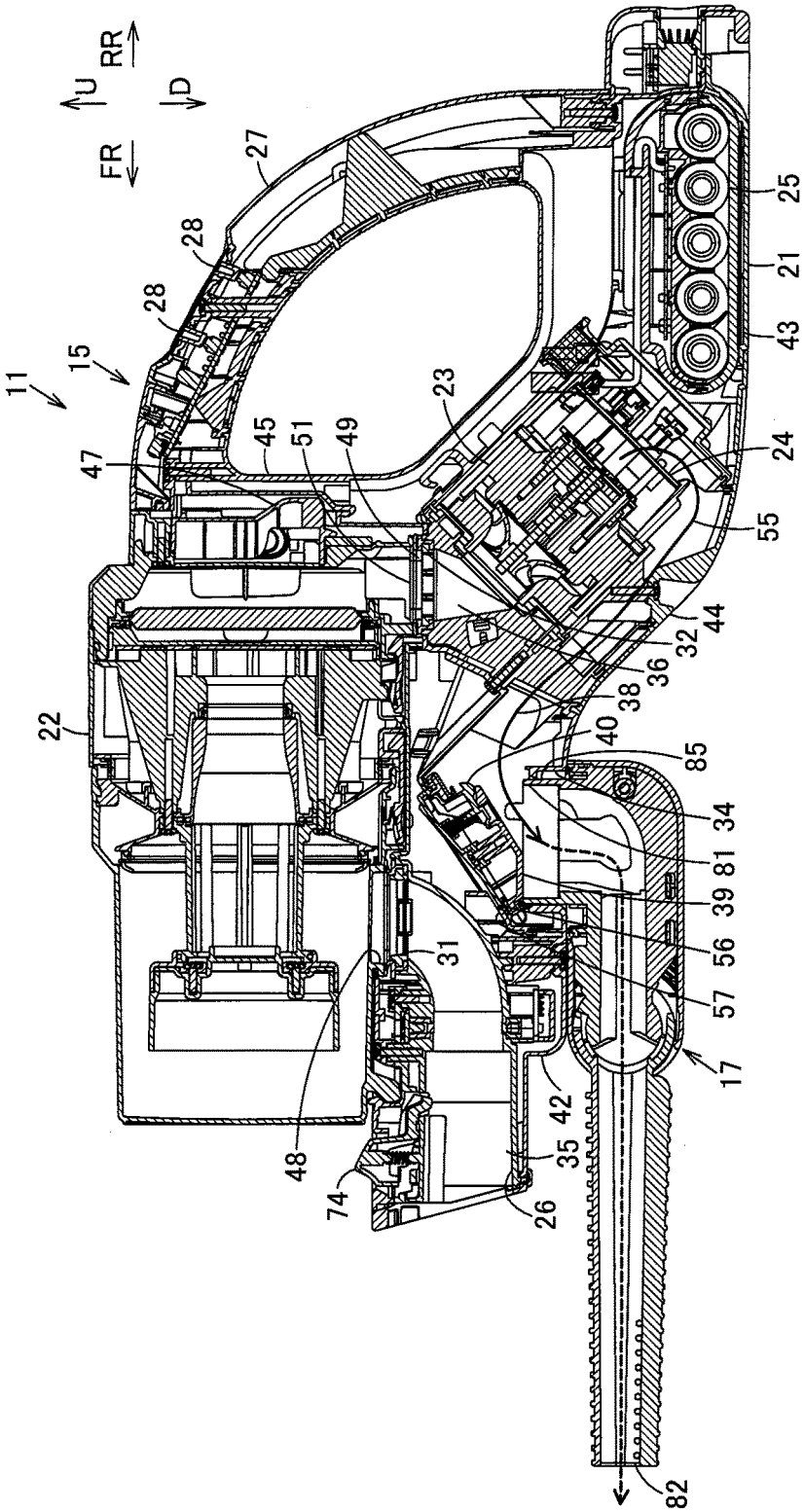
U
RR
D
FR
11
15
27
28
28
47
45
51
49
23
22
25
21
43
24
55
44
32
36
38
40
85
34
81
39
56
57
17
42
35
26
74
48
31
82

FIG. 7

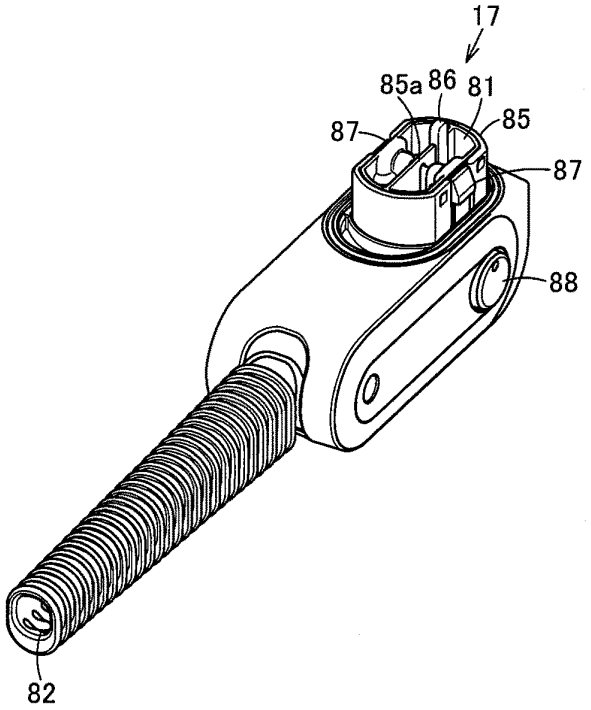
17
85a
86
81
85
87
87
88
82

FIG. 8

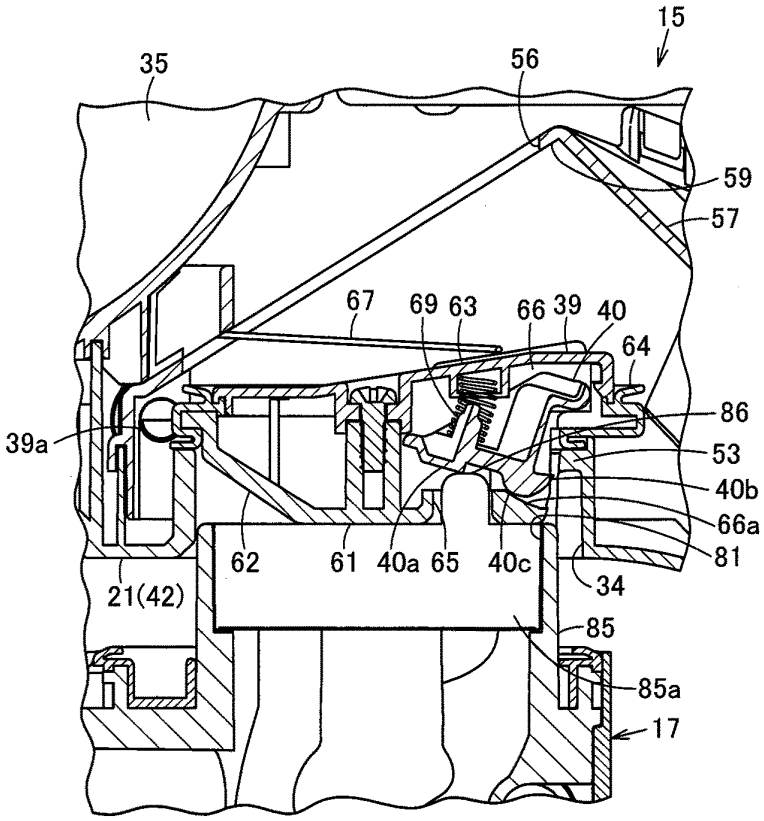
15
35
56
59
57
67
69
63
66
39
40
64
86
39a
53
40b
66a
81
62
61
40a
65
40c
34
21(42)
85
85a
17

FIG. 9

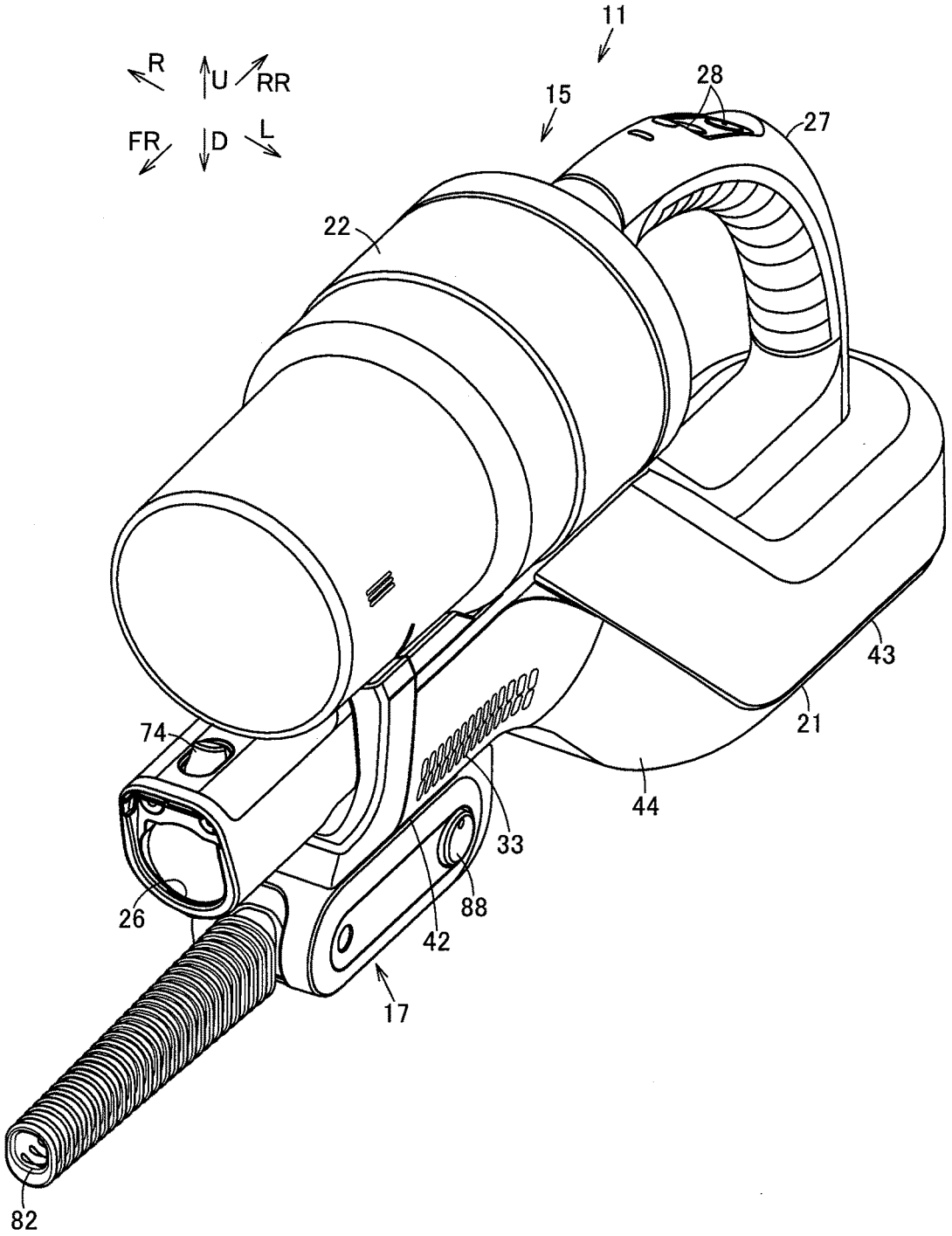


FIG. 10

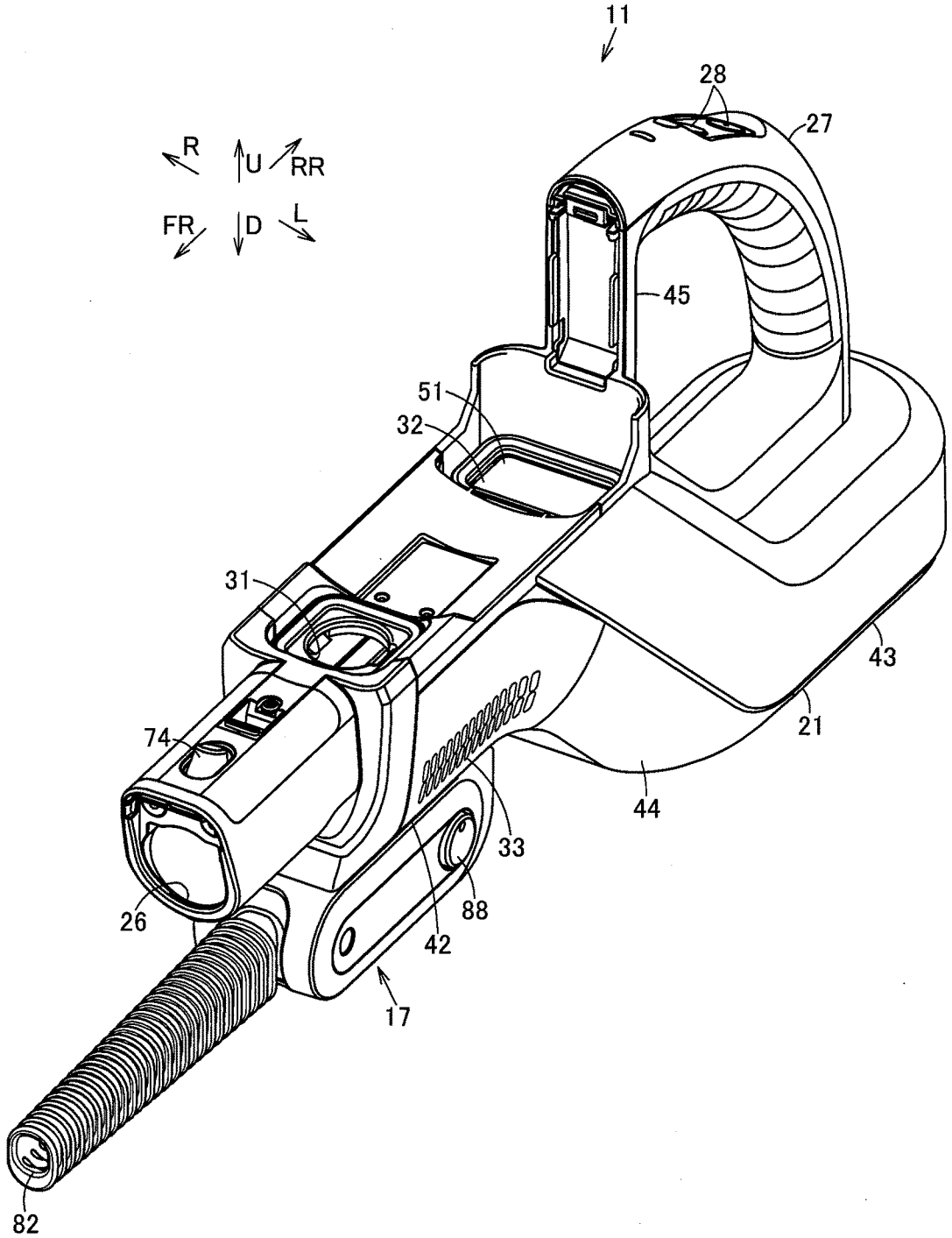


FIG. 11

**INTERNATIONAL SEARCH REPORT**

International application No.
PCT/JP2017/027515

A. CLASSIFICATION OF SUBJECT MATTER
*A47L9/00*(2006.01)i, *A47L5/24*(2006.01)i, *A47L9/08*(2006.01)i

According to International Patent Classification (IPC) or to both national classification and IPC

B. FIELDS SEARCHED

Minimum documentation searched (classification system followed by classification symbols)
A47L9/00, A47L5/24, A47L9/08

Documentation searched other than minimum documentation to the extent that such documents are included in the fields searched

| | | | |
|---|---|---|---|
| Jitsuyo Shinan Koho | 1922-1996 | Jitsuyo Shinan Toroku Koho | 1996-2017 |
| Kokai Jitsuyo Shinan Koho | 1971-2017 | Toroku Jitsuyo Shinan Koho | 1994-2017 |

Electronic data base consulted during the international search (name of data base and, where practicable, search terms used)

C. DOCUMENTS CONSIDERED TO BE RELEVANT

| Category* | Citation of document, with indication, where appropriate, of the relevant passages | Relevant to claim No. |
|---|---|---|
| X<br>Y | JP 2005-6880 A (Matsushita Electric Industrial Co., Ltd.),<br>13 January 2005 (13.01.2005),<br>paragraphs [0024] to [0028]; fig. 1 to 8<br>(Family: none) | 1,5-6<br>2-4,7-10 |
| Y | Microfilm of the specification and drawings annexed to the request of Japanese Utility Model Application No. 13885/1977(Laid-open No. 108769/1978)<br>(Matsushita Electric Industrial Co., Ltd.),<br>31 August 1978 (31.08.1978),<br>specification, page 2, line 8 to page 4, line 10; fig. 1 to 2<br>(Family: none) | 2-4,7-10 |

☒ Further documents are listed in the continuation of Box C. ☐ See patent family annex.

* Special categories of cited documents:
"A" document defining the general state of the art which is not considered to be of particular relevance
"E" earlier application or patent but published on or after the international filing date
"L" document which may throw doubts on priority claim(s) or which is cited to establish the publication date of another citation or other special reason (as specified)
"O" document referring to an oral disclosure, use, exhibition or other means
"P" document published prior to the international filing date but later than the priority date claimed
"T" later document published after the international filing date or priority date and not in conflict with the application but cited to understand the principle or theory underlying the invention
"X" document of particular relevance; the claimed invention cannot be considered novel or cannot be considered to involve an inventive step when the document is taken alone
"Y" document of particular relevance; the claimed invention cannot be considered to involve an inventive step when the document is combined with one or more other such documents, such combination being obvious to a person skilled in the art
"&" document member of the same patent family

| | |
|---|---|
| Date of the actual completion of the international search<br>04 September 2017 (04.09.17) | Date of mailing of the international search report<br>19 September 2017 (19.09.17) |
| Name and mailing address of the ISA/<br>Japan Patent Office<br>3-4-3,Kasumigaseki,Chiyoda-ku,<br>Tokyo 100-8915,Japan | Authorized officer<br><br>Telephone No. |

Form PCT/ISA/210 (second sheet) (January 2015)

**INTERNATIONAL SEARCH REPORT**

International application No.
PCT/JP2017/027515

C (Continuation). DOCUMENTS CONSIDERED TO BE RELEVANT

| Category* | Citation of document, with indication, where appropriate, of the relevant passages | Relevant to claim No. |
|---|---|---|
| Y | JP 2011-250972 A (Panasonic Corp.), 15 December 2011 (15.12.2011), paragraphs [0029] to [0030]; fig. 5 & CN 102266206 A | 7-10 |
| Y | JP 2001-198054 A (Ryobi Ltd.), 24 July 2001 (24.07.2001), paragraph [0012]; fig. 1 (Family: none) | 10 |
| Y | JP 2001-161603 A (Makita Corp.), 19 June 2001 (19.06.2001), paragraph [0021]; fig. 3 (Family: none) | 10 |

Form PCT/ISA/210 (continuation of second sheet) (January 2015)

## REFERENCES CITED IN THE DESCRIPTION

*This list of references cited by the applicant is for the reader's convenience only. It does not form part of the European patent document. Even though great care has been taken in compiling the references, errors or omissions cannot be excluded and the EPO disclaims all liability in this regard.*

### Patent documents cited in the description


- JP 2011250972 A **[0003]**