R. KAMIOKA.

LIFE SAVING APPARATUS.

APPLICATION FILED MAY 22, 1914.

1,144,904.

Patented June 29, 1915.

Fig. 1.

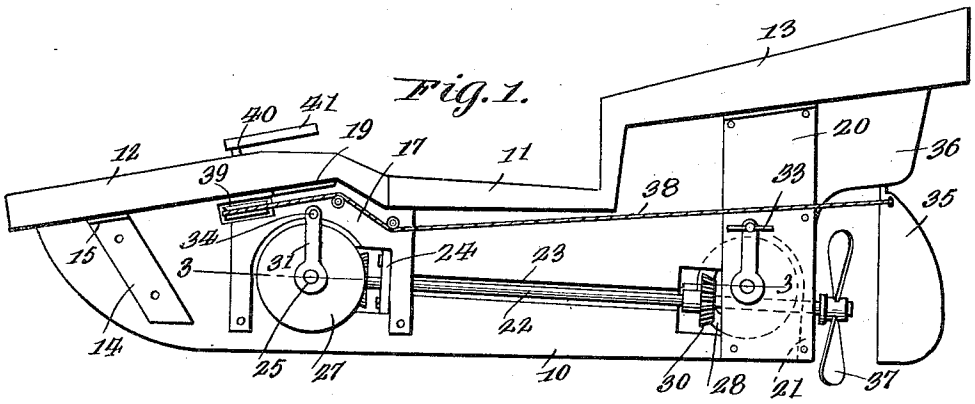

Fig. 2.

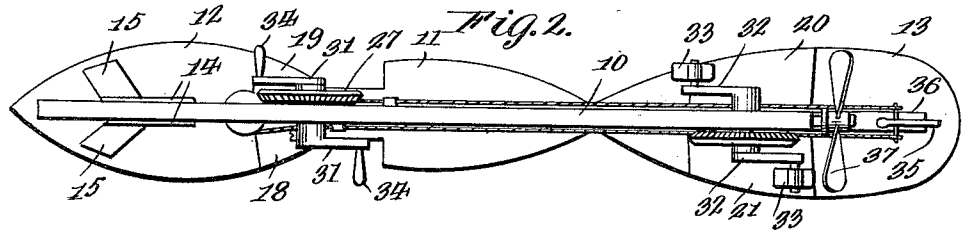

Fig. 3.

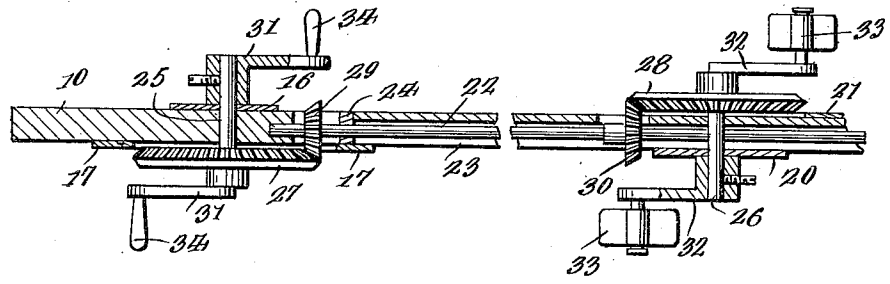

Inventor

Ruiko Kamioka.

Witnesses

Guy M. Spring.

Ross J. Woodward.

By Richard B. Owen.

Attorney

THE NORRIS PETERS CO., PHOTO-LITHO., WASHINGTON, D. C.

UNITED STATES PATENT OFFICE.

RIUHE KAMIOKA, OF LAKE FOREST, ILLINOIS.

LIFE-SAVING APPARATUS.

1,144,904. Specification of Letters Patent. Patented June 29, 1915.

Application filed May 22, 1914. Serial No. 840,350.

To all whom it may concern:

Be it known that I, RIUHE KAMIOKA, a citizen of the United States, residing at Lake Forest, in the the county of Lake and State of Illinois, have invented certain new and useful Improvements in Life-Saving Apparatus, of which the following is a specification.

This invention relates to a swimming device and the principal object of the invention is to provide a swimming device by means of which a person can propel himself through the water and which may be used as a life saving device.

Another object of the invention is to provide improved means for propelling the swimming device through the water, the propelling means consisting broadly of a propeller shaft rotated by gear wheels mounted upon shafts turned by the feet and hands of the operator.

Another object of the invention is to provide an improved type of body portion for the swimming device which at the same time will be light and thus easy to handle.

Another object of the invention is to provide a swimming device which may be easily steered and thus caused to move in the desired direction.

This invention is illustrated in the accompanying drawings, wherein—

Figure 1 is a side elevation of the improved swimming device; Fig. 2 is a bottom plan view of the improved swimming device; and Fig. 3 is a longitudinal sectional view through the swimming device taken along the line 3—3 in Fig. 1.

The body portion of this device comprises a keel 10 which is preferably formed of wood and a platform 11 preferably formed of cork or similar material which is very buoyant and will thus float easily upon the water. The forward portion 12 of the platform is extended diagonally downward as clearly shown in Fig. 1 so that when in use the forward portion will extend substantially parallel to the surface of the water. It should also be noted that the rear portion 13 of the platform 11 is thickened so that the rear portion of the swimming device will be supported and prevented from being carried beneath the surface of the water by the weight of the propelling mechanism and rudder. The forward portion of the swimming device is strengthened by plates 14 which extend diagonally across the keel 10 and have their upper end portions 15 secured to the forward end portion of the platform 11. Plates 16 and 17 are secured to the keel adjacent the forward shaft to be hereinafter described and have their upper end portions 18 and 19 extending beneath the platform 11 to strengthen the platform. The rear portion of the swimming device is also braced by means of plates 20 and 21 which are placed adjacent the rear pedal shaft to be hereinafter described and have their upper end portions extending beneath the rear end portion of the platform to brace the platform.

The propeller shaft 22 is positioned in a longitudinally extending groove or pocket 23 formed in the keel 10, the forward and rear end portions of the propeller shaft being rotatably mounted by means of bearings such as shown at 24. The hand operated drive shaft 25 and the pedal shaft 26 are rotatably mounted in the keel and are provided with large beveled gears 27 and 28 which mesh with the small beveled gears 29 and 30 carried by the propeller shaft 22. It should be noted that the beveled gears 27 and 28 are mounted upon opposite sides of the keel 10 so that the swimming device will be evenly balanced and thus prevented from having a tendency to turn toward the one side and not sit straight in the water. It should also be noted that the brace 17 is in the form of a yoke which extends about the beveled gear 27 to reinforce the keel but at the same time not interfere with the rotation of the gear 27. The lower end portion of the bracing plate 21 is cut to extend about the gear 28 and brace the keel without interfering with the rotation of the gear 28. It should also be noted that the plates 16 and 20 are provided with openings through which the shafts 25 and 26 pass and will thus form bearings for the shafts. Cranks 31 which are to be turned by hand are carried by the forward shaft 25 and the cranks 32 which carry the foot pedals 33 are carried by the rear shaft 26. It will thus be seen that the propeller shaft 22 can be rotated by a person straddling the central portion of the platform 11 and placing the feet against the pedals 33 and grasping the handles 34 of the cranks 31. The rudder 35 is carried by the rear end portion 36 of the keel behind the propeller 37 and is held in

a desired position by a cable 38 which passes around a pulley wheel or drum 39 carried by the shaft 40 of the tiller.

When this device is in use it is placed in the water and is held in its normal position shown in Fig. 1 due to the fact that the keel carries the propelling mechanism thus making the keel heavier than the platform 11. The platform 11 by being formed of cork will cause the swimming device to float upon the surface of the water, this floating action being assisted by the fact that the keel is formed of wood. The person using this swimming device straddles the central portion and by leaning forwardly may grasp the handle 34 with his hands and may place his feet against the pedals 33. The shafts 25 and 26 can thus be easily rotated and rotary motion transmitted to the propeller shaft 22 through the medium of the relatively large gear wheels carried by the pedally and manually operated shafts and the relatively small beveled gear wheels carried by the propeller shaft. If it is desired to guide the swimming device the tiller 41 may be grasped with one hand and moved to hold the rudder 35 to the proper position which will cause the swimming device to move in the desired direction. It should be noted that if desired the tiller may have its free end provided with a fork which would extend to engage the shoulders of the operator and thus permit the swimming device to be guided by swinging the shoulders to one side and thus move the tiller in the desired direction. It should also be noted that the central portion of the platform is shaped as shown in Fig. 2 so that a relatively wide support may be provided for the body of the user.

What is claimed is:—

1. A swimming device comprising a body portion including a platform and keel, said platform having its forward end portion inclined downwardly with respect to the central portion and having its rear end portion extending parallel to the plane of the forward portion and thickened, a propeller shaft rotatably carried by said keel, hand operated means for rotating said propeller shaft positioned adjacent the inner end of the forward portion of said platform, foot operated means for rotating said propeller shaft positioned beneath the rear portion of said platform, a propeller carried by said propeller shaft beneath the rear portion of said platform, a rudder carried by said keel beneath the rear portion of said platform, a tiller carried by the forward portion of said platform, and means connecting said tiller with said rudder to permit said rudder to be turned by said tiller.

2. A swimming device comprising a body portion including a platform and keel, said platform having its forward end portion inclined downwardly with respect to the central portion and having its rear end portion extending parallel to the plane of the forward portions, a propeller shaft rotatably carried by said keel, means for rotating said propeller shaft, and means for steering said swimming device.

3. A swimming device comprising a body portion including a platform and keel, said platform having its forward end portion inclined downwardly with respect to the central portion and having its rear end portions extending parallel to the plane of the forward portion and thickened, a propeller shaft rotatably carried by said keel, a propeller carried by said propeller shaft beneath the rear portion of said platform, a rudder carried by said keel beneath the rear portion of said platform, operating means for said rudder, and operating means for said propeller shaft.

In testimony whereof I affix my signature in presence of two witnesses.

RIUHE KAMIOKA.

Witnesses:
TETSU MASUDA,
C. T. ATKINSON.

Copies of this patent may be obtained for five cents each, by addressing the "Commissioner of Patents. Washington, D. C."