(No Model.)

J. E. BELL.

CARRIAGE SPRING.

No. 255,375. Patented Mar. 21, 1882.

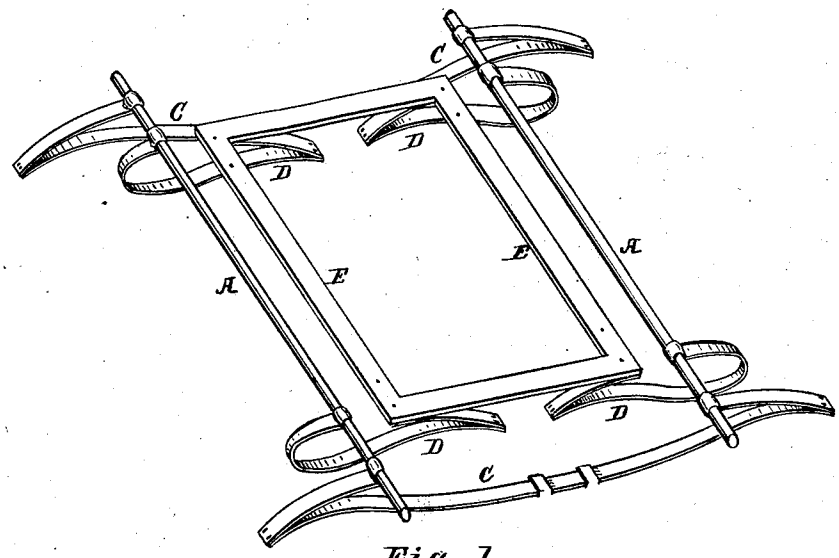

Fig. 1.

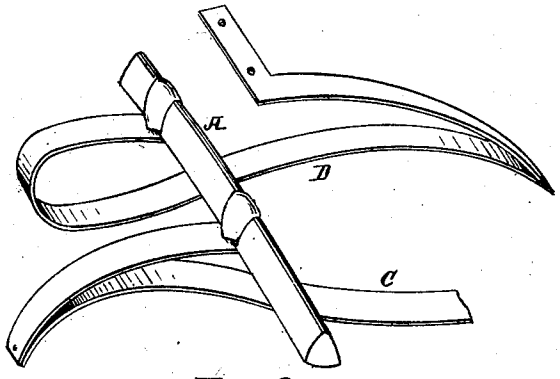

Fig. 2.

Witnesses:

John Wemmer

E M Stuart

Inventor:

John E. Bell,

by C. P. Humphrey

Atty.

N. PETERS, Photo-Lithographer, Washington, D. C.

UNITED STATES PATENT OFFICE.

JOHN E. BELL, OF AKRON, ASSIGNOR OF ONE-HALF TO WILLIAM J. BELL, OF TOLEDO, OHIO.

CARRIAGE-SPRING.

SPECIFICATION forming part of Letters Patent No. 255,375, dated March 21, 1882.

Application filed August 1, 1881. (No model.)

To all whom it may concern:

Be it known that I, JOHN E. BELL, of Akron, in the county of Summit and State of Ohio, have invented a new and useful Improvement in Carriage-Springs, of which the following is a specification.

My invention relates to improvements in springs for vehicles, and has especial reference to side-bar buggies, wherein the side bars are connected with the gearing and body, respectively, by separate springs; but it may be applied to vehicles of different construction.

The objects of my invention are to provide great elasticity, prevent lateral motion, and avoid wear and rattling.

It consists in the devices illustrated in the accompanying drawings, wherein Figure 1 is a perspective view of a part of a buggy embodying my invention, and Fig 2 a portion of Fig. 1 enlarged.

The side bars, A A, are supported from the axles by the springs C C. These springs consist of an under leaf or leaves attached to the rear axle and front bolster, the ends of which extend outward beyond the side bars, whence a partial upper leaf returns beneath the side bars, to which it is attached by a clip.

The side bars are connected with the body by the springs D D. These consist of partial elliptic springs, fastened to the side bars by a clip, passing thence outward and downward, and returning inward until the ends of opposite springs nearly meet, whence a partial upper leaf returns beneath a corner of the body-frame E, to which it is bolted.

By these devices great elasticity is obtained, the short return-leaves prevent any lateral motion, and the springs being attached directly to the side bars without links or shackles, there is no wear and consequent rattling.

The springs D D may be used alone in vehicles where side bars are not employed to connect the body directly with the gearing; but in such case the outer loop should turn to the opposite side from the return-leaf.

I claim as my invention—

In combination with the side bars, A A, the springs C C and D D, each having partial return-leaves, and constructed and arranged as shown, for the purpose specified.

In testimony that I claim the foregoing I have hereunto set my hand this 27th day of July, A. D. 1881.

JOHN E. BELL.

Witnesses:
C. P. HUMPHREY,
E. W. STUART.