US 20150211641A1

(19) United States

(12) Patent Application Publication

(10) Pub. No.: US 2015/0211641 A1

(43) Pub. Date: Jul. 30, 2015

PACHT

(54) **VALVE CARTRIDGE ASSEMBLY WITH A SUCTION VALVE IN LINE WITH A DISCHARGE VALVE AND A SUCTION VALVE SEAT CIRCUMSCRIBING AN INLET WHICH THE SUCTION VALVE COVERS**

(71) Applicant: **GARDNER DENVER WATER JETTING SYSTEMS, INC.**, Houston, TX (US)

(72) Inventor: **Amos PACHT**, Houston, TX (US)

(21) Appl. No.: **14/163,872**

(22) Filed: **Jan. 24, 2014**

Publication Classification

(51) **Int. Cl.**
F16K 1/42 (2006.01)

(52) **U.S. Cl.**
CPC *F16K 1/42* (2013.01)

(57) **ABSTRACT**

A valve body has a first main channel, a second main channel and a plurality of inlet channels. Each inlet channel has a respective first and a respective second opening and a fluid pathway extending between its respective first opening and its respective second opening. Each first opening provides an entry into its respective pathway and provides an entry into the valve body. Each second opening provides an exit from its respective pathway into the first main channel. A suction valve seat delimits a first outlet. The first outlet opens into the first main channel. The suction valve seat has a continuous valve seating surface without any through channels opening therethrough. A discharge valve seat delimits a second outlet. The second outlet opens into the second main channel.

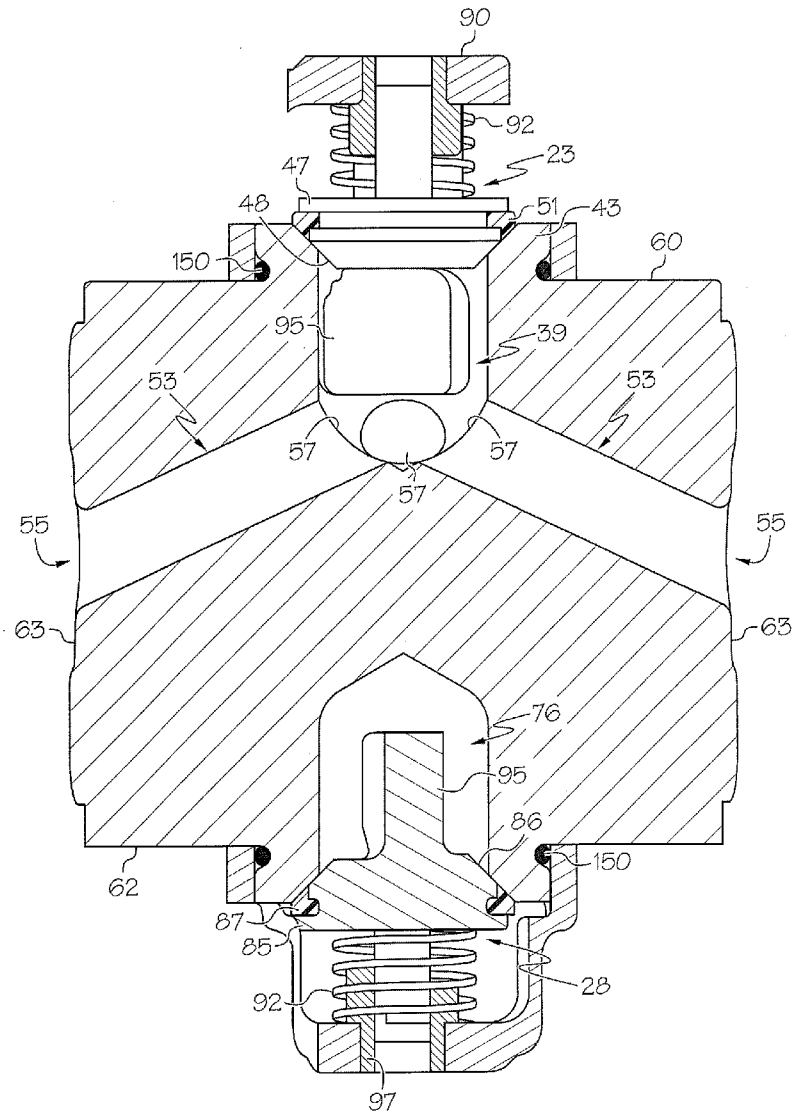

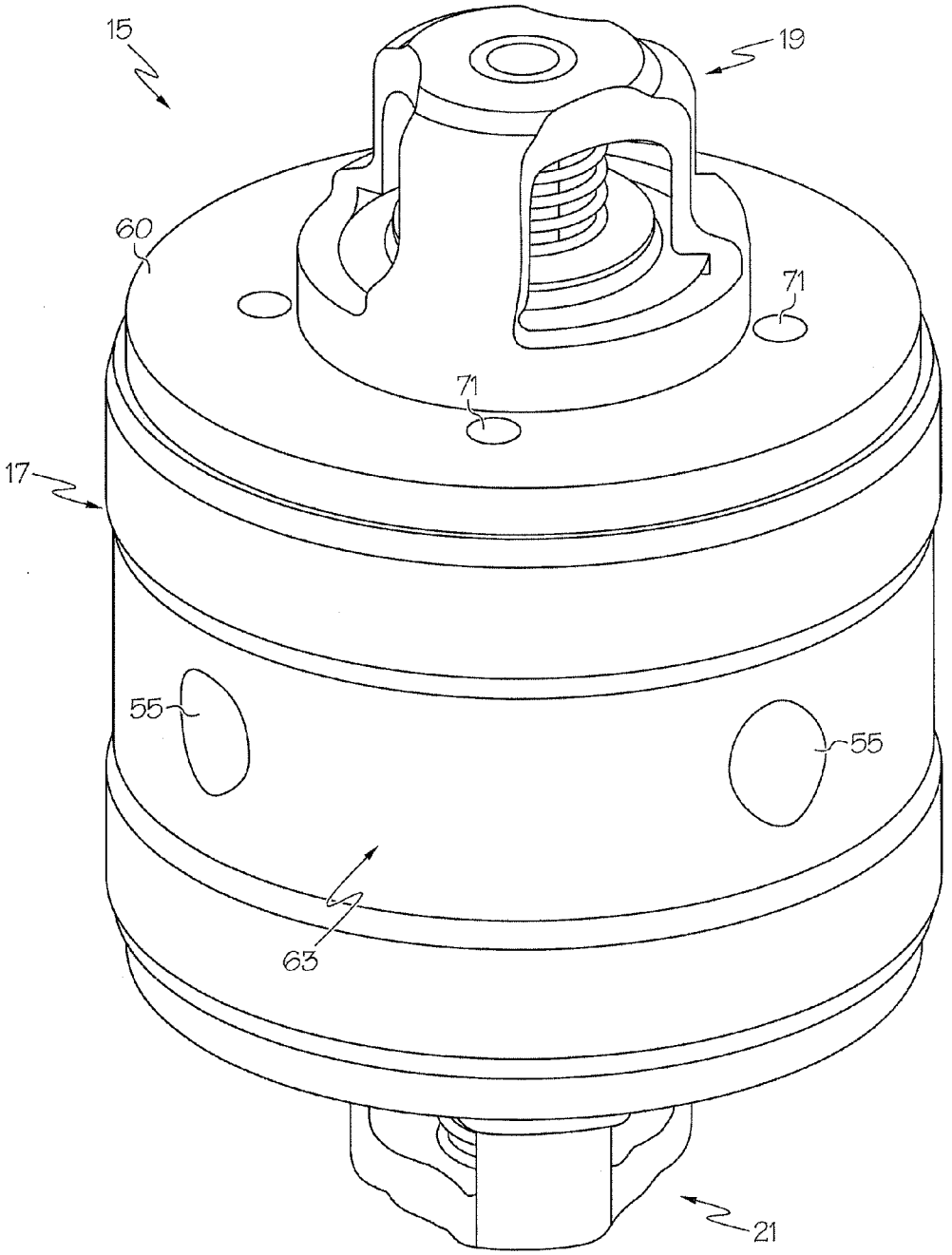

FIG. 1

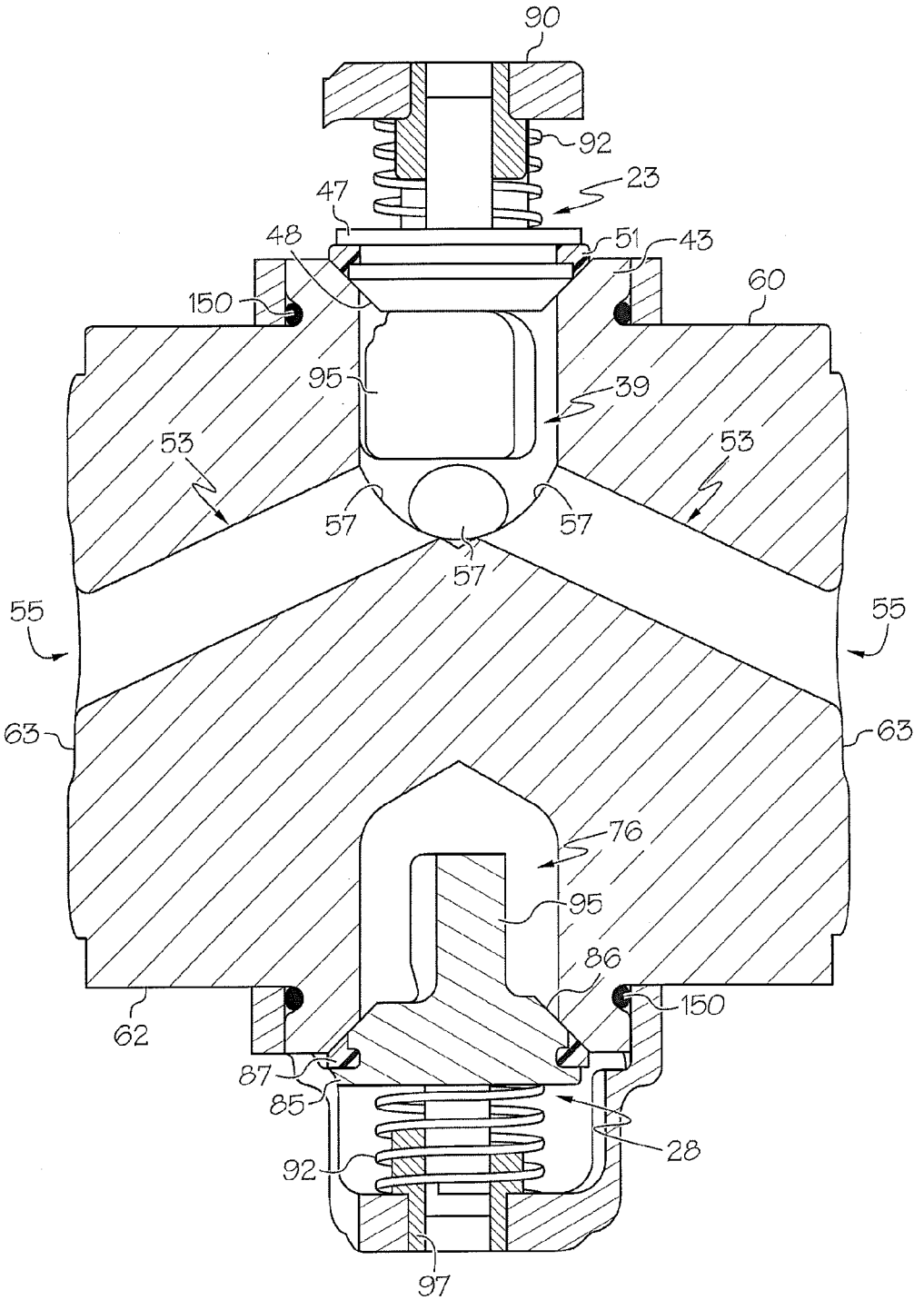
90
92
23
47
48
51
43
150
60
95
39
53
53
57
57
57
55
55
63
63
76
95
86
150
62
87
85
28
92
97

FIG. 2A

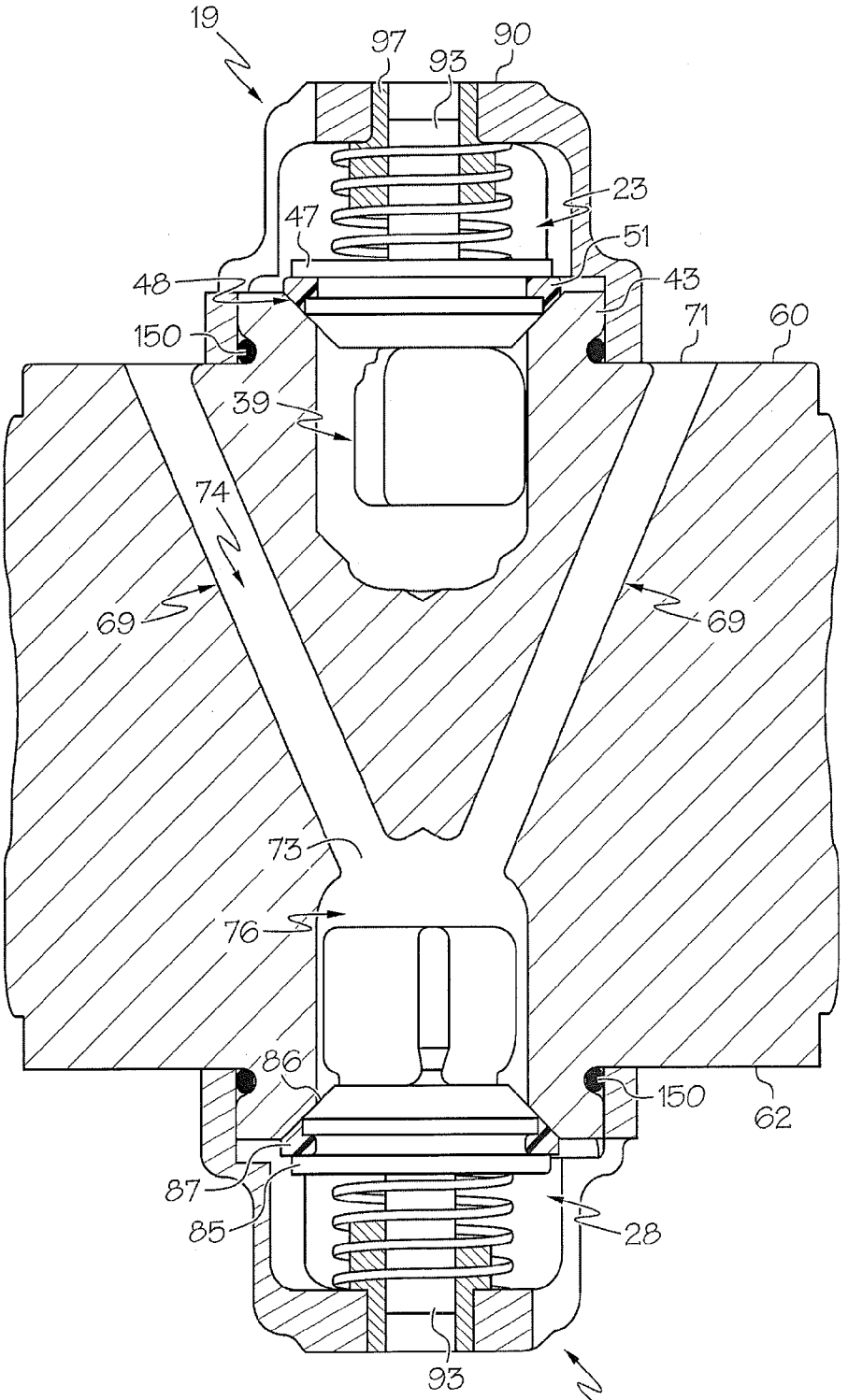
19
97
93
90
23
47
51
48
43
150
71
60
39
74
69
69
73
76
86
150
62
87
85
28
93
21

FIG. 2B

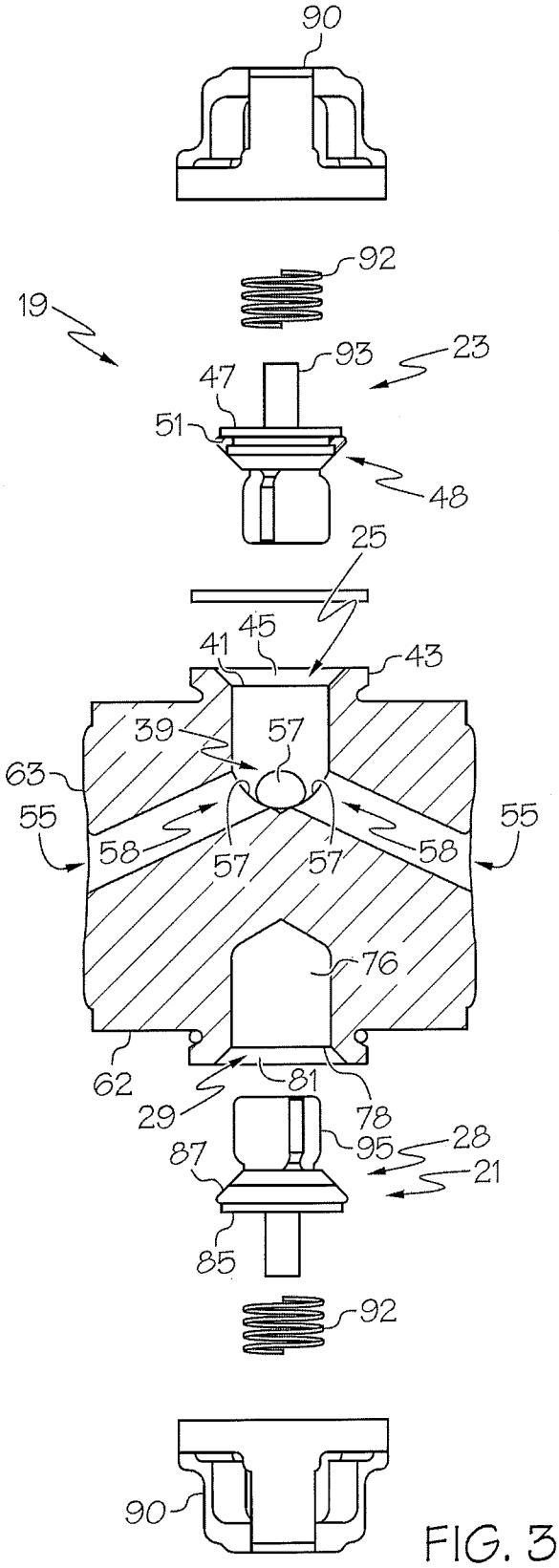
90
92
19
93
23
47
51
48
25
45
41
43
39
57
63
55
58
57
57
58
55
76
62
81
29
78
95
28
87
21
85
92
90

FIG. 3A

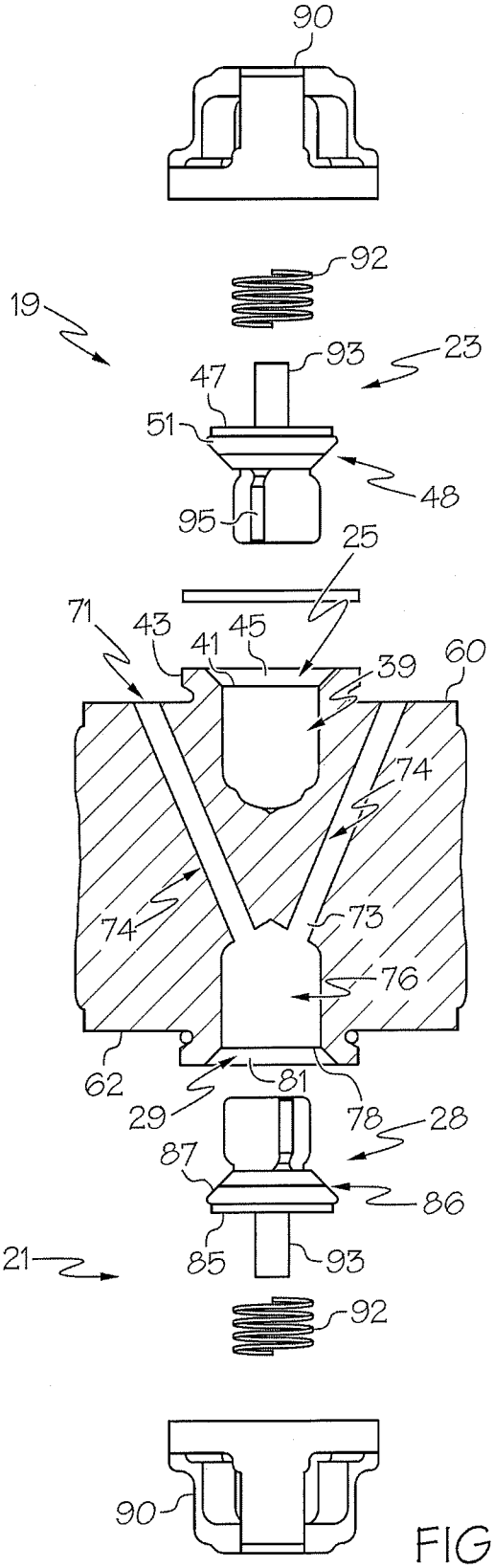
90
92
19
93
23
47
51
48
95
25
71
43
41
45
39
60
74
74
73
76
62
81
29
78
28
87
86
85
93
21
92
90

FIG. 3B

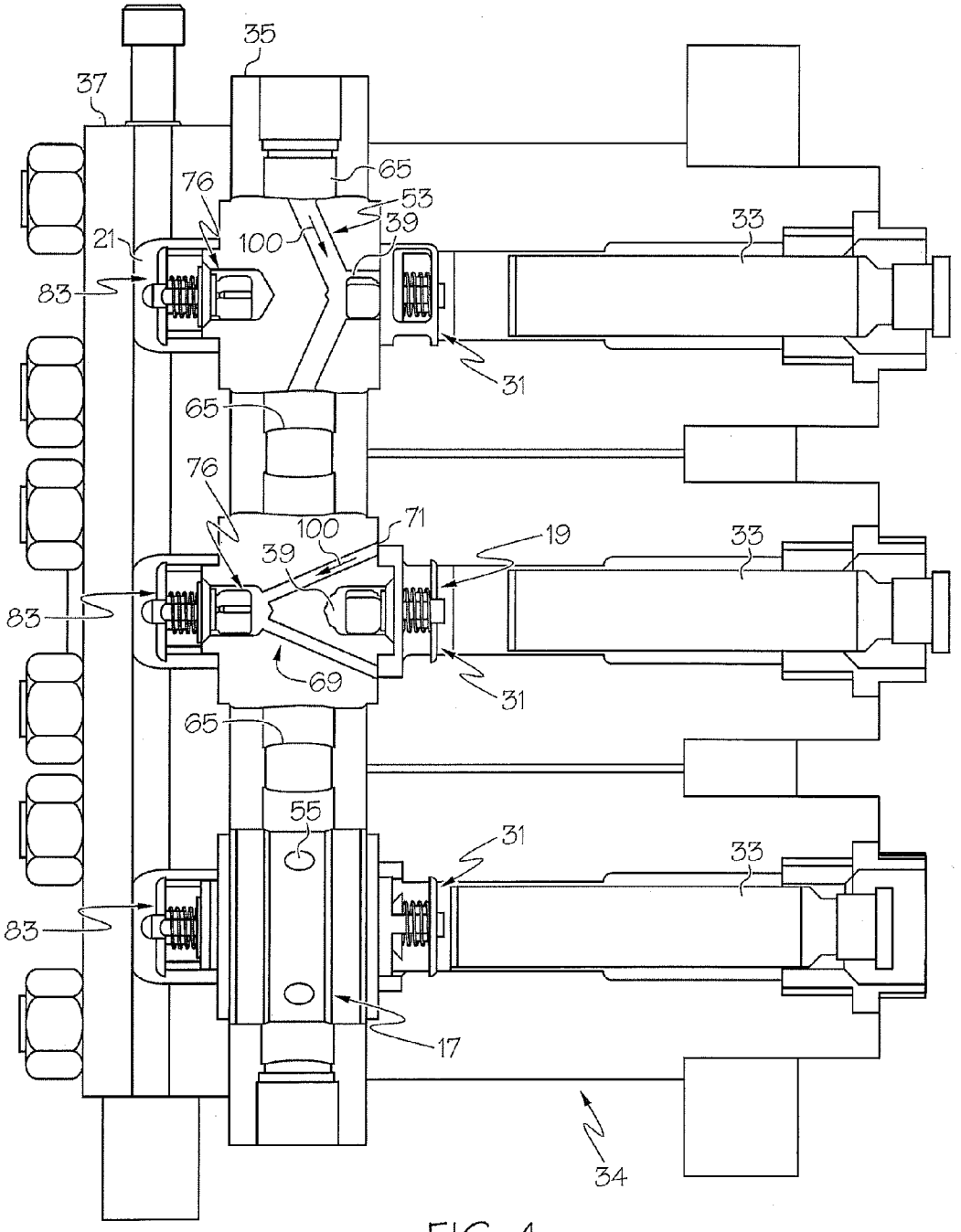
35
37
65
76
53
39
21
100
33
83
31
65
76
71
100
19
33
39
83
69
31
65
55
31
33
83
17
34

FIG. 4

VALVE CARTRIDGE ASSEMBLY WITH A SUCTION VALVE IN LINE WITH A DISCHARGE VALVE AND A SUCTION VALVE SEAT CIRCUMSCRIBING AN INLET WHICH THE SUCTION VALVE COVERS

FIELD OF INVENTION

[0001] The disclosure concerns a valve cartridge assembly that has a valve body with an inlet valve assembly at a first end of the valve body and an outlet valve assembly at a second end of the valve body. The valve cartridge assembly can be adapted to be carried by a fluid end of a high pressure fluid pump.

BACKGROUND OF INVENTION

[0002] Valve cartridge assemblies are used in fluid ends of high pressure pumps to direct the intake and outlet of fluid, such as liquid, drawn in and out of the fluid end during reciprocation of a pumping member, such as a plunger or a piston, of the pump. U.S. Pat. No. 3,106,169, Intensifier High Pressure Valve and Block Assembly recites that a fluid intensifier valve is adapted for connection to an open ended cylinder which contains a reciprocating piston having a body portion having a face adapted for connection to the open ended cylinder. A bore connecting to the open ended cylinder extends longitudinally through a multiplicity of core block members disposed interiorly of the body portion to a fluid outlet. A first counterbore is in one of the core block members adjacent the face. A second counterbore is in another of said core block member's interior of the body portion. An annular recess is arranged coaxially with respect to the bore and defined by the bore block members and an internal wall of the body portion. A multiplicity of radially and longitudinally extending passages connects the annular recess and the first counterbore. A radially extending passage connects the annular recess to a fluid inlet at the body portion exterior. An annular valve disc in the first counterbore is adapted to move reciprocally in longitudinal direction from a first position to a second position during a discharge stroke of the reciprocating piston and from the second position to the first position during a suction stroke of the reciprocating piston. An opening extending therethrough is in registration with the bore and an annular surface arranged to close the multiplicity of radially and longitudinally extending passages connecting the annular recess and said first counterbore when in said second position and to open the passages when in the first position. A poppet valve member in the second counterbore is provided to move reciprocally in longitudinal direction from a first position to a second position during a discharge stroke of the reciprocating piston and from said second position to said first position during a suction stroke of the reciprocating piston. It has a surface arranged to close the bore when in the first position and to open the bore when in said second position. U.S. Pat. No. 5,302,087, Amos Pacht, discloses a suction valve seat member with passageways through the suction valve seat member. The intake valve assembly is seated against these passageways during the discharge stroke. During the discharge stroke, high pressure fluid passes through the inlet valve assembly and through a central passageway provided in the suction valve seat member.

SUMMARY

[0003] An embodiment of the invention includes a valve body. The valve body has a first main channel formed in a portion of said valve body. A second main channel is formed in a portion of said valve body. A plurality of inlet channels are formed in portions of said valve body. Each inlet channel has a respective first and a respective second opening; each inlet channel has a fluid pathway extending between its respective first opening and its respective second opening. Each each first opening of each inlet channel provides an entry into its respective pathway and provides an entry into the valve body. Each second opening provides an exit from its respective pathway into the first main channel. A suction valve seat delimits a first outlet. The first outlet opens into said first main channel. The suction valve seat has a continuous valve seating surface without any through channels opening therethrough. A discharge valve seat delimits a second outlet. The second outlet opens into the second main channel.

[0004] The valve body can further include a plurality of outlet channels formed in portions of said valve body. Each outlet channel has a respective first and a respective second opening. Each outlet channel has a fluid pathway extending between its respective first opening and its respective second opening. Each first opening of each outlet channel provides an entry into its respective pathway and an entry into the valve body. Each second opening provides an exit from its respective pathway into the second main channel.

[0005] A suction valve can be coupled to said valve body. The suction valve has a contact surface which contacts said suction valve seat seating surface when said suction valve is in a closed position and wherein a discharge valve is coupled to the valve body. A discharge valve can be coupled tot eh valve body. It has a contact surface which contacts said discharge valve seat seating surface when said discharge valve is in a closed position.

BRIEF DESCRIPTION OF THE DRAWINGS

[0006] FIG. **1** is an isometric view of a valve cartridge assembly looking into a suction end of the assembly;

[0007] FIG. **2***a* is a partial sectional view of the assembly of FIG. **1** wherein the valve body and other components of the assembly have been sectioned; the section is through inlet channels in the valve body; some components, such as the suction valve, for clarity, have not been sectioned;

[0008] FIG. **2***b* is a partial sectional view of the assembly of FIG. **1** wherein the valve body and other components of the assembly have been sectioned; the section is through outlet channels in the valve body; the valve cartridge assembly has been rotated 45 degrees relative to FIG. **2***a*; some components, such as the suction valve, for clarity, have not been sectioned;

[0009] FIG. **3***a* is an exploded and partial sectional view of the assembly of FIG. **1** wherein the valve body, discharge valve assembly O-ring, and elastomeric member of the suction valve have been sectioned; the section is through inlet channels in the valve body;

[0010] FIG. **3***b* is an exploded and partial sectional view of the assembly of FIG. **1** wherein the valve body and discharge valve assembly O-ring have been sectioned; the section is through outlet channels in the valve body; the valve cartridge assembly has been rotated 45 degrees relative to FIG. **3***a;*

[0011] FIG. **4** is a partial sectional view of a fluid end of a pump having the valve cartridge assembly of FIG. **1** installed therein; valve cartridge assembly labeled number **1** is sectioned through inlet channels; for clarity the valve cartridge assembly labeled **2** has been rotated 45 degrees relative to cartridge number **1** and sectioned through outlet channels;

valve cartridge assembly labeled **3** has been rotated 90 degrees relative to valve cartridge assembly **1** and has not been sectioned; the valves are all in the closed position.

DETAILED DISCLOSURE

[0012] Now referring to FIGS. **1-3***b*, a valve cartridge assembly **15** has a valve body **17**, a suction valve assembly **19** carried by the valve body **17** and a discharge valve assembly **21** carried by the valve body **17**. The suction valve assembly **19** has a suction valve **23**. The suction valve in the closed position closes and seals off and covers an inlet **25**. The discharge assembly **21** has a discharge valve **27**. The discharge valve **27** in the closed position closes and seals off and covers an outlet **29**. The inlet **25** opens through a portion of the valve body **17**. The outlet **29** opens through a portion of the valve body **17**. The inlet **25** is called an inlet because it allows fluid to flow into the pumping chamber **31** from the suction manifold. With respect to the valve body **17**, the inlet **25** can be called a first outlet or a suction outlet because this is where fluid entering the valve body **17** exits the valve body **17** into the pumping chamber **31**. The outlet **29** is called an outlet because it allows fluid to exit the valve body from the pumping chamber **31**. With respect to the valve body, the outlet **29** can be called a second outlet or discharge outlet because this is where fluid exits the valve body after being received into the valve body **17** from the pumping chamber **31**. In general, and as explained in more detail below, during the upstroke of the pumping member **33** of the pump, fluid is drawn from the suction manifold **35** of the fluid end **34** and into the valve body **17**. The fluid moves through the inlet **25** and past the suction valve **23** and into pumping fluid chamber **31** of the fluid end **34**. During the down stroke, the fluid in the pumping chamber **31** moves back into the valve body **17** and passes through the outlet **29** and past the discharge valve **28**. The fluid flows into the discharge manifold **37** of the fluid end **34**.

[0013] The inlet **25** is the only inlet proximate and adjacent the suction valve **23**. The inlet **25** is at a first end of a first main channel **39** and opens into the first main channel **39**. The first main channel **39** is formed in a portion of the valve body **17**. The inlet **25** is delimited by a surface. The surface **41** circumscribes the inlet **25**. The surface is continuous. The continuous surface is smooth and without any appreciable detents or bumps. The inlet **25** is delimited and circumscribed in the radial direction, relative to the axis of the inlet, by the surface **41**. The continuous surface **41** intersects and lies along a continuous path wherein the path falls completely within a single plane.

[0014] The inlet **25** is delimited by suction valve seat **43**. The inlet **25** is circumscribed by the suction valve seat **43**. The inlet **25** is circumscribed and delimited in the radial direction, relative to the axis of the inlet, by the suction valve seat **43**. The inlet **25** is the only inlet delimited and/or circumscribed by the suction valve seat **43**. The continuous surface **41** forms at least part of the suction valve seat **43**. In the present embodiment the suction valve seat **43** has a seating surface **45** which is formed at least in part by the continuous surface **41**. In the present example the entire valve seating surface **45** is formed by the continuous surface **41**. The valve seating surface **45** is continuous and without any through channels opening therethrough. It also has no appreciable bumps or detents therein. The inlet **25** is the only inlet delimited and/or circumscribed by the suction valve seating surface **45**. The suction valve seat **43** is coupled to a portion of the valve body **17**, is integrally formed with the portion of the valve body **17** and seamless with the portion of valve body.

[0015] The valve seating surface **45** extends from a first axial end to a second axial end. The second axial end is proximate the first main channel **39** and delimits an area of the inlet **25** that opens to the main channel **39**. The first axial end is proximate the pumping fluid chamber **31** and delimits that area of the inlet **25** which opens to the fluid chamber **31**. The valve seating surface **45** is angled from the first axial end towards the axis of inlet. The axis of the inlet extends through the first axial end and the second axial end. The angle of intersection, relative to the axis of the inlet, is greater than 0 and less than 90 degrees. The surface **45** is concave.

[0016] The suction valve **23** has a valve closing member **47** with a contact surface **48**. In this example the closing member **47** is a valve head. The contact surface **48** contacts the valve seating surface **45** when the suction valve is in the closed position. The contact surface **48** delimits a shape complimentary to the shape delimited by the valve seating surface **45**. The contact surface **48** is continuous, smooth and without any appreciable detents or bumps. A portion **51** of the contact surface **48** which contacts valve seating surface **45** when the valve is in the closed position enhances the sealing engagement between the closing member **47** and the suction valve seat **43**. The portion **51** is a different material than other portions of the contact surface that contact the valve seating surface. The portion can be a softer resilient alloy than the other contact portions. The portion can be plastic or rubber. The portion in the enclosed example is elastomeric. The portion is a continuous surface without any appreciable bumps or detents. The elastomeric material is part of a continuous elastomeric member inlaid around a portion of the closing member. It is carried by a portion of the closing member **47**. The pumping member **33** in the present example is a plunger.

[0017] A plurality of inlet channels **53** is in different portions the valve body **17**. Each has a respective first opening **55** and a respective second opening **57**. Each channel has a fluid pathway **58** extending between its respective first **55** and respective second **57** opening. Each first opening **55** opens through different portions of a surface **63** of the valve body **17**. There are four first openings **55**, each spaced 90 degrees apart and around an axis of the valve body **17**. The axis of the valve body **17** extends through a first **60** and second **62** surface of the valve body **17**. The surface **63** is radially outward of the axis. The surface **63** delimits the valve body in the radial direction relative to the valve body axis. The surface **63** is an intermediate surface and between the first surface **60** and the second surface **62** of the valve body **17**. The first **60** and second **62** surfaces are oppositely facing and opposite each other. The first surface **60** is proximate the suction valve seat **43**. The suction valve seat **43** extends away from the first surface **60** in the direction of the inlet axis. It is coupled to the first surface **60** and seamless with first surface. The second surface **62** is proximate the discharge valve seat **65**. The first **60** and second **62** surfaces are axially spaced and delimit axial ends of the valve body **17**. Each first opening **55** opens into and is proximate a portion of a suction chamber **65** in suction manifold **35** of a fluid end **34** of the pump. Each first opening **55** provides an entry into its respective fluid pathway **58** and an entry into the valve body **17**. Each inlet channel second opening **57** opens into and is proximate the first main channel **39**. Each second opening **57** provides an exit from its pathway **58** into the first main channel **39**. The main channel **39** can simply be a hollow formed by a chamber into which each

second opening **57** opens. Each inlet channel **53** extends radially outwardly and axially relative to the valve body **17** axis, inlet **25** axis and first main channel **39** axis. Accept for the first main channel, the inlet channels do not intersect. The suction valve **23** is not proximate or adjacent any of these second openings **53**.

[0018] A plurality of outlet channels **69** is in different portions of the valve body **17**. Each channel **69** has a respective first opening **71** and a respective second opening **73**. Each channel **69** has a fluid pathway **74** extending between its respective first **71** and second **73** openings. Each first **71** opening opens into and is proximate pumping chamber **31**. Each first opening **71** provides an entry into its respective pathway **74** and an entry into valve body **17** from the pumping chamber **31**. The pumping chamber **31** is the area fluid is drawn into from the suction manifold **35** after it has passed through the inlet **25**. Neither the suction valve **23** nor the discharge valve **28** covers the first openings **71**. Each first opening **71** remains open and uncovered during operation of the pump. There are four first openings **71**; each first opening **71** opens through a portion of the first surface **60**. Each first opening **71** is spaced 90 degrees apart around and radially outward of the valve body axis. Each first opening **71** is also radially outward of and around the inlet **25**. Each second opening **73** opens into a second main channel **76**. Each second opening **73**, provides an exit from its respective pathway **74** into the second main channel **76**. The second main channel **76** is also in a portion of the valve body **17**. It is fluidly sealed off from the first main channel **39**. There are no channels in the valve body interconnecting the first main channel and the second main channel. The second main channel **76** can simply be a hollow chamber into which all second openings **73** open. Each outlet channel **69** extends radially outwardly and axially relative to the valve body **17** axis and second main channel axis and outlet axis. The outlet channels first openings **71** and outlet channels **69** are each offset 45 degrees from each adjacent inlet channel first opening and each adjacent inlet channel.

[0019] The outlet **29** is the only outlet proximate and adjacent the discharge valve **28**. The outlet **29** is at a first end of the second main channel **76**. The outlet **29** is delimited by a surface **78**. The surface **78** circumscribes the outlet **29**. The surface is continuous. The continuous surface is smooth and without any appreciable detents or bumps. The outlet **29** is delimited and circumscribed in the radial direction, relative to the axis of the outlet, by the surface **78**. The continuous surface **78** intersects and lies along a continuous path wherein the path falls completely within a single plane.

[0020] The outlet **29** is delimited by discharge valve seat **65**. The outlet **29** is circumscribed by the discharge valve seat **65**. The outlet **29** is circumscribed and delimited in the radial direction, relative to the axis of the outlet, by the discharge valve seat **65**. The outlet **29** is the only outlet delimited and/or circumscribed by the discharge valve seat **65**. The continuous surface **78** forms at least part of the discharge valve seat **65**. In the present embodiment the discharge valve seat **65** has a seating surface **81** which is formed at least in part by the continuous surface **78**. In the present example the entire valve seating surface **81** is formed by the continuous surface **78**. The valve seating surface **81** is continuous and without any through channels opening therethrough. It is without any appreciable detents or pumps therein. The outlet **29** is the only outlet delimited and/or circumscribed by the discharge valve seating surface **81**. The discharge valve seat **65** is coupled to a portion of the valve body **17**, integrally formed with the portion valve body **17** and seamless with the portion of the valve body **17**.

[0021] The valve seating surface **81** extends from a first axial end to a second axial end. The second axial end is proximate the second main channel **76** and delimits an area of the outlet **29** that opens to the second main channel **76**. The first axial end is proximate fluid chamber **83** in the discharge manifold **37**. The first axial end delimits that area of the outlet **29** which opens to the fluid chamber **83**. The discharge valve seat **65** is coupled to the second surface **62** and seamless with second surface **62**. It extends away from the second surface **62** in the direction of the outlet **29** axis. The discharge valve seating surface **81** is angled from the first axial end towards the axis of outlet. The axis of the outlet extends through the first axial end and the second axial end. The angle of intersection relative to the axis of the outlet is greater than 0 and less than 90 degrees. The suction valve seating surface **81** is concave.

[0022] The discharge valve **28** has a valve closing member **85** with a contact surface **86**. In this example the closing member **85** is a valve head. The contact surface **86** contacts the valve seating surface **81** when the discharge valve **28** is in the closed position. The contact surface **86** delimits a shape complimentary to the shape delimited by the valve seating surface **81**. The contact surface **86** is continuous, smooth and without any appreciable detents or bumps. A portion **87** of the contact surface **86** which contacts valve seating surface **81** when the valve **28** is in the closed position enhances the sealing engagement between the closing member **85** and the discharge valve seat **28**. The portion **87** is a different material than other portions of the contact surface **86** that contact the valve seating surface **81**. The portion **86** can be a softer resilient alloy than the other contact portions. The portion **86** can be plastic or rubber. The portion **86** in the enclosed example is elastomeric. The portion is a continuous surface without any appreciable bumps or detents. The elastomeric material is part of a continuous elastomeric member inlaid around a portion of the closing member. It is carried by a portion of the closing member **85**.

[0023] In more detail the suction **19** and discharge **21** valve assemblies each have a cage **90**. Each cage **90** supports its respect valve **23**, **28** and acts as a guide for its respective valve **23**, **28**. The cage **90** also acts as a retainer for each assembly's respective spring **92**. Each spring biases its respective valve **23**, **28** in the closed position. Each spring **92** is carried by its respect valve **23**, **28** and sits around each valve's respective stein **93**. Each spring **92** is disposed between each valve assembly's respective cage **90** and its respective head **47**, **85**. Each spring **92** biases its respective valve **23**, **28** in the closed position. Each valve **23**, **28** is in slideable engagement with its respective cage **90**. Each stem **93** is in slideable engagement with the stem guide **97** of its respective cage **90**. Each cage **90** is coupled to the valve body **17**. One cage **90** is coupled proximate the first surface **60**. The other cage **90** is coupled proximate the second surface **62**. Notably an O-ring **150** seals each cage **90** to valve body **17**. Extending from each valve head **47**, **85** in a direction opposite from which each stem **93** extends is a respective flow divider **95**. Each flow divider **95** has partitions which form channels within each divider. When each valve **23**, **28** is in its respective closed position, each flow divider **95** sits in its respective main channel **39**, **76**. The suction valve flow divider **95** sits in first main channel **39** when suction valve **23** is in the closed position. It is in inlet **25**,

at least partially, when the suction valve **23** is in the open position. The discharge valve flow divider **95** sits in the second main channel **76** when discharge valve **28** is in the closed position. It is in the outlet **29**, at least partially, when the discharge valve **28** is in the open position. The suction valve **23** does not have a flow channel therethrough to allow fluid to pass into the valve body when the suction valve **23** is in the closed position.

[0024] The discharge valve assembly **21** and the suction valve assembly **19** have the same construction and their components have the same dimensional shape. Every component does not have to have the same dimension or construction. Notably the contact surface **48**, **86** of each valve head **47**, **85** is dimensionally the same and is the same construction. Each valve head **47**, **85** is dimensionally the same and has the same construction. The valve cartridge assemblies are interchangeable with one another. All components do not have to be interchangeable with one another. Notably the valves **23**, **28** are interchangeable and the cages **90** are interchangeable.

[0025] In more detail, the valve body **17** is a single unit. It is a seamless construction.

[0026] The inlet and outlet are inline and extend along a same axis; the suction valve and discharge valve are inline and extend along a same axis; the first main channel and second main channel are inline and along a same axis. The inlet, outlet, suction valve, discharge valve, first main channel, and second main channel are all inline with each other and along a same axis.

[0027] In operation, during the upstroke of the pumping member **33** of the pump, fluid **100**, in this case liquid and more particularly water, is drawn into the into the suction chamber **65** of the fluid end **34**. From the suction chamber **65** the fluid is drawn into the valve body **17** through the first openings **55** of the inlet channels **53**. The fluid passes into the inlet channels **53** from the first openings **55**. The fluid exits the inlet channels **53** through the second openings **57** of the inlet channels **53**. From the second openings **53**, the fluid enters the first main channel **39**. The fluid travels from first main channel **29** and through the inlet **25** past the flow divider **95** and past the valve head **47**. The suction valve **23** has moved from the closed position, in which it seats on the valve seat **43** and wherein its contact surface **48** is in contact with the valve seating surface **45**, to an open position. In the open position fluid can pass over the valve head **47** from the inlet **25**. The valve head contact surface **48** is off of suction valve seating surface **45**. From the inlet **25** the fluid passes into and collects in chamber **31**. During the upstroke, the discharge valve **28** is in the closed position. In the closed position, during the upstroke, the discharge valve closing member **85** is in sealing engagement with the discharge valve seat **65**. The contact surface **86** is in contact with the valve seating surface **81**. The valve **28** seats on the discharge vale seat **65**.

[0028] During the down stroke of the pumping member **33** of the pump, the suction valve head **47** moves to the closed position from the open position along the inlet axis. In the closed position, during the down stroke, the valve head **47** is in sealing engagement with the valve seat **43**. The contact surface **48** is in contact with the valve seating surface **45**. The valve **23** seats on the valve seat **43**. Fluid passes from pumping chamber **31** through the first openings **71** of the outlet channels **69**. The fluid passes from the outlet channels **69** through the channels' second openings **73** and into the second main channel **76**. From the second main channel, the fluid travels through the outlet **29** and past the flow divider **95** and past the discharge valve head **85**. The discharge valve **28** has moved from the closed position in which it seats on the discharge valve seat **65**, its contact surface **86** is in contact with the valve seating surface **81**, to an open position. The discharge valve moves along the outlet axis to the open position. In the open position fluid can pass over the valve head **85** from the outlet **29**. The valve head contact surface **86** is off of suction valve seat **65**. From the outlet the fluid passes into chamber **83** of the discharge manifold **37**. During the operation of the pump the pumping member **33** reciprocates between the upstroke and down stroke, the suction valve **23** reciprocates from the closed to the open position along the inlet axis and the discharge valve **28** reciprocates from the closed to the open position along the outlet axis.

[0029] From the foregoing, it will be seen that this invention is one well adapted to attain all the ends and objects hereinabove set forth together with other advantages which are obvious and which are inherent to the structure. It will be understood that certain features and sub combinations in addition to those shown and discussed herein are possible. This is contemplated by and is within the scope of the claims. Since many possible embodiments of the invention may be made without departing from the scope thereof, it is also to be understood that all matters herein set forth or shown in the accompanying drawings are to be interpreted as illustrative and not limiting.

[0030] The constructions and methods described above and illustrated in the drawings are presented by way of example only and are not intended to limit the concepts and principles of the present invention. Thus, there has been shown and described several embodiments of a novel invention. As is evident from the foregoing description, certain aspects of the present invention are not limited by the particular details of the examples illustrated herein, and it is therefore contemplated that other modifications and applications, or equivalents thereof, will occur to those skilled in the art. The terms "having" and "including" and similar terms as used in the foregoing specification are used in the sense of "optional" or "may include" and not as "required". Many changes, modifications, variations and other uses and applications of the present construction will, however, become apparent to those skilled in the art after considering the specification and the accompanying drawings. All such changes, modifications, variations and other uses and applications which do not depart from the spirit and scope of the invention are deemed to be covered by the invention which is limited only by the claims which follow.

1. A valve body comprising:

a first main channel formed in a portion of said valve body;

a second main channel formed in a portion of said valve body;

a plurality of inlet channels formed in portions of said valve body, each inlet channel having a respective first and a respective second opening, each inlet channel has a fluid pathway extending between its respective first opening and its respective second opening, each first opening of each inlet channel provides an entry into its respective pathway and provides an entry into said valve body, each second opening provides an exit from its respective pathway into said first main channel;

a suction valve seat delimiting a first outlet, said first outlet opens into said first main channel; said suction valve seat has a continuous valve seating surface without any through channels opening therethrough;

a discharge valve seat delimiting a second outlet, said second outlet opens into said second main channel.

2. The valve body of claim **1** further comprising:

a plurality of outlet channels formed in portions of said valve body, each outlet channel having a respective first and a respective second opening, each outlet channel has a fluid pathway extending between its respective first opening and its respective second opening, each first opening of each outlet channel provides an entry into its respective pathway and an entry into said valve body, each second opening provides an exit from its respective pathway into said second main channel.

3. The valve body of claim **1** wherein said first outlet is the only outlet delimited by said suction valve seat.

4. The valve body of claim **3** wherein said second outlet is the only outlet delimited by said discharge valve seat.

5. The valve body of claim **3** wherein a suction valve is coupled to said valve body, said suction valve has a contact surface which contacts said suction valve seat seating surface when said suction valve is in a closed position and wherein a discharge valve is coupled to said valve body, said discharge valve has a contact surface which contacts said discharge valve seat seating surface when said discharge valve is in a closed position.

6. The valve body of claim **5** having the suction valve coupled to said valve body wherein a portion of said contact surface which contacts said suction valve seating surface when the valve is in the closed position a different material than other portions of the contact surface that contact the valve seating surface.

7. The valve body of claim **6** having the suction valve coupled to said valve body wherein said portion of said contact surface is elastomeric.

8. The valve body of claim **3** wherein the suction valve seating surface is concave.

9. The valve body of claim **7** having the suction valve coupled to said valve body wherein said valve body is coupled to a fluid end of a pump.

10. The valve body of claim **5** having the suction valve coupled to said valve body and valve body is coupled to the fluid end further comprising

a plurality of outlet channels formed in a portion of said valve body, each outlet channel having a respective first and a respective second opening, each outlet channel has a fluid pathway extending between its respective first opening and its respective second opening, each first opening of each outlet channel provides an entry into its respective pathway and an entry into said valve body, each second opening provides an exit from its respective pathway into said second main channel; and

wherein said fluid end has a suction manifold with a suction chamber and said fluid end has a pumping chamber, and wherein each first opening of each said inlet channel providing said entry into said valve body provide said entry from said suction chamber and wherein each first opening of each of said inlet channels providing an entry into said valve body, provide said entry from said pumping chamber.

* * * * *