Oct. 13, 1931. O. F. OPPERMAN 1,827,541

CHILD'S POWER SHOVEL

Filed Aug. 25, 1930 2 Sheets-Sheet 1

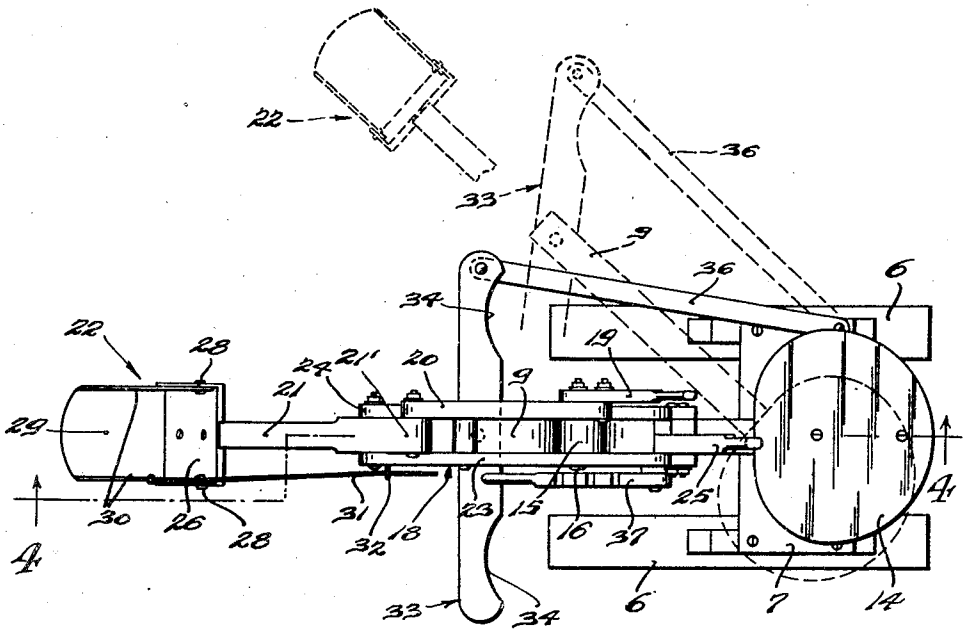

Fig. 1.

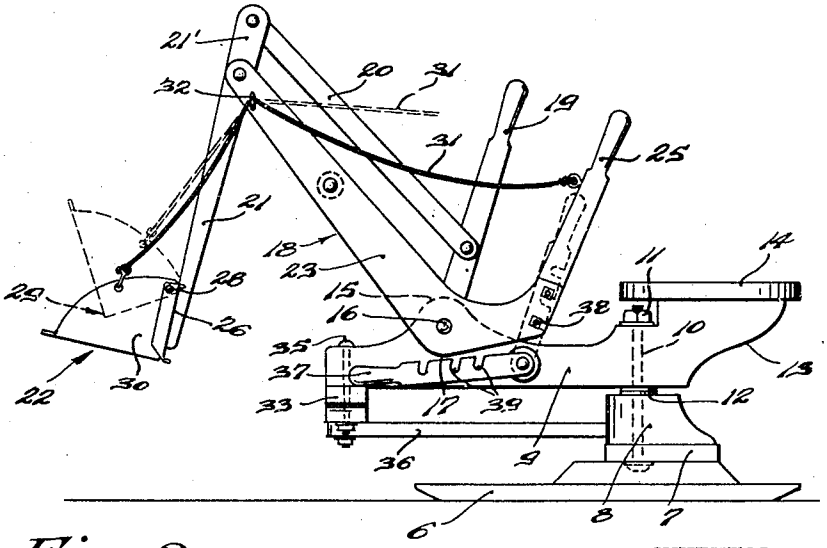

Fig. 2.

INVENTOR
Otto F. Opperman
BY
Edward E. Barnes
ATTORNEY

Oct. 13, 1931. O. F. OPPERMAN 1,827,541

CHILD'S POWER SHOVEL

Filed Aug. 25, 1930 2 Sheets-Sheet 2

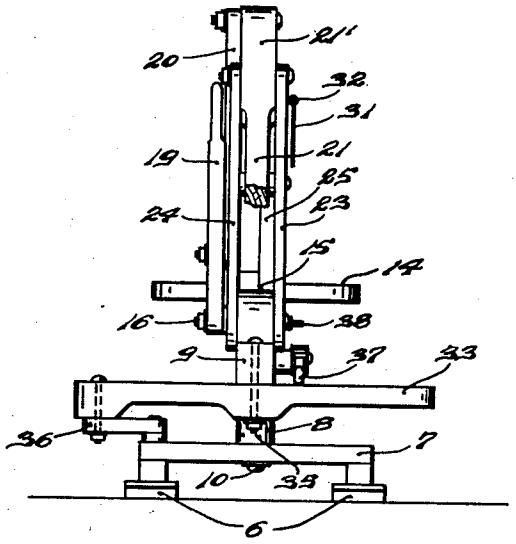

Fig. 3.

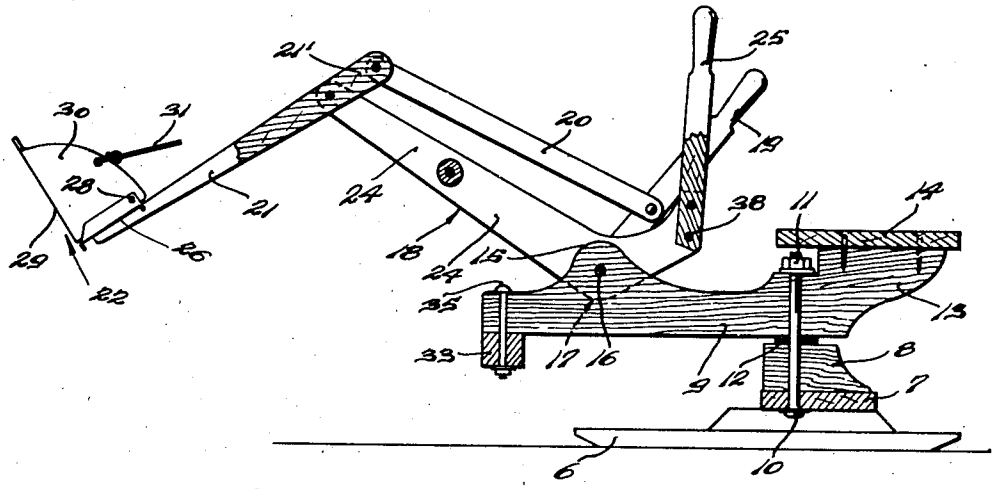

Fig. 4.

INVENTOR
Otto F. Opperman
BY
Edward E. Barnes
ATTORNEY

Patented Oct. 13, 1931

1,827,541

UNITED STATES PATENT OFFICE

OTTO F. OPPERMAN, OF SEATTLE, WASHINGTON

CHILD'S POWER SHOVEL

Application filed August 25, 1930. Serial No. 477,557.

This invention relates to toys, and more particularly, to apparatus of this character simulating the construction and operation of a steam shovel, the object, generally stated, being the provision of a strong, inexpensive and attractive device which will afford amusement and exercise to a child.

A particular object is the provision of a device reproducing, both in appearance and activity, the characteristics inherent to a steam shovel as generally used for engineering excavations.

The invention presents certain combinations of elements adaptable for use as operating mechanisms, both in commercial and in toy sizes, and for a wide range of tools and other working elements which are directly applied to the desired duty.

With the above and further objects and advantages in view, such as will appear in the following detailed description and claims, the invention consists in the novel construction of parts, and in the arrangement and combination thereof, as hereinafter set forth.

In the accompanying drawings,—

Figure 1 is a top plan view of apparatus embodying the present invention, full and broken lines respectively indicating dispositions of associated parts responsive to swivel activity of the frame, the view particularly illustrating the invention as applied to toy excavating apparatus. Figure 2 is a side elevation thereof, the closed position of a pivoted bucket body being illustrated by full lines and the open position thereof by broken lines. Figure 3 is an end elevation with parts broken away and shown in section; and Figure 4 is a longitudinal vertical section, taken substantially on line 4—4 of Fig. 1 with the bucket shown in its relatively extended disposition.

The invention simulates the construction and operation of a power shovel and comprises a base or body portion consisting of a pair of laterally spaced skid-runners 6, a transverse bolster member 7, and a jack-leg 8 supported by said bolster medially of its width.

A frame is designed to have swivel activity in a horizontal plane upon the aforesaid base, and to this end a reach 9 is journalled for movement through an arc of substantially 270° about the axis of a vertically disposed inverted king-bolt 10 which is passed through the bolster 7, jack leg 8 and reach 9, a nut 11 engaging the king-bolt 10 at the top and securing the several parts together. The relatively movable surfaces of the jack leg 8 and reach 9 are spaced by washers 12 which permit the free turning of the reach 9 relative to the base, the several parts being secured together with a non-binding fit.

The vertical axis about which the reach 9 swings is disposed adjacent one end of the reach and, as shown in the drawings, is adjacent the rear extremity 13 of said reach, a saddle or seat 14 being secured to the latter back of the king-bolt 10 so as to counterbalance the weight of the operator with respect to bucket-actuating construction hereinafter described.

The extended or forward section of said reach is suitably conformed to present a nodular projection 15 through which a transverse pintle 16 is journaled for pivotally supporting the elbow 17 of a crank-configured member 18, said member constituting, with lever 19, link 20, and a bucket-arm or dipper-stick 21, a jointed control lever for governing the disposition of a bucket or dipper, generally represented by 22.

The crank member 18 constitutes a rocker arm which is provided with a rigid handle 25 for manual control at its rear end, said rocker arm being pivoted at its front end to the bucket-arm 21 a distance from but relatively near one end of the the latter, which distance is indicated by the character 21′. The link 20 is pivoted at one end to the extreme end portion of the dipper-stick 21 and at the other end to the lever 19 intermediate the ends of the latter. The lever 19 constitutes a manual control for the link 20 and the bucket-arm 21 and is pivotally connected adjacent its bottom end to the crank lever 18 and to reach 9 by means of the pintle 16. The crank lever 18 and the bucket-arm 21 are thus adapted to swing in vertical planes collectively and relatively, or the bucket-arm 21 alone may be so swung.

Said crank member 18 preferably comprises two spaced-apart conjointly movable members 23, 24, arranged for straddling engagement over said integral control lever 25 and over the fulcrum of the aforesaid bucket-arm 21.

The preferred construction of bucket 22 provides, rigid with the extreme outer end of said arm 21, a back wall 26, pins 28 pivotally supporting a scoop 29 by the side walls 30 thereof upon lateral flanges of the back wall. A cord 31 is secured at one end to the control lever 25 and passes through an eyebolt 32 secured to the crank lever 18 and is secured at its other end to one of the side walls 30 of the bucket 22, this cord 31 being loose, and thus affording a controlled discharge of the bucket contents, as represented in dotted lines, Fig. 2.

For effecting the swivel activity of the reach 9 and the excavating mechanism about a vertical axis, by the feet of the operator while sitting upon the saddle 14, I provide a cross bar 33 fulcrumed intermediate of its ends upon a vertically-disposed bolt 35 mounted in the forward end of the reach 9, this cross bar being formed with foot-engaging recesses 34 upon both sides of its pivotal connection and being pivotally connected adjacent one end to one end of a link 36 which at its other end is pivotally connected to the bolster 7. Said link 36 is preferably fulcrumed to the bolster member 7 rearwardly of the vertical transverse plane of the reach axis 10 and projected therefrom, in a normal disposition of the reach medially between the skid-runners 6, in a manner to afford an acute angular arrangement in its intersection with the cross-bar 33. In this particular, attention is directed to the resultant provision for a most extensive field of operation within which the bucket or other suitable tool may work, the free swinging activity interrupted only by contact of the link 36 with the jack-leg 8 or a swingable arrangement closely approximating a 270° arc.

For facilitating the dumping operation of the bucket contents, a lock is provided for the crank lever 18, in various selective positions, through the medium of a lever 37 pivoted at one end in the reach 9 and having one edge formed with a plurality of slots 39 adapted selectively to be engaged with an extension 38 of one of the bolts which secures together at one end the two spaced members 23 and 24 forming the crank lever 18. Such engagement of the lever 37 with the crank lever 18 is shown in broken lines in Figure 2.

In operation, the action of the operator's feet, such engaging recessions 34 of the foot bar, determines the location of the reach frame in the desired performance of a dirt or sand excavation. Pressure outwardly upon lever 19 retracts the bucket 22 into a position, cooperatively with subsequent pressure outwardly upon lever 25, to dispose the scoop member 29 adjacent the desired ground excavation. Power application upon the lever 19 effects a movement of the bucket about its fulcrum at the outer end of the crank lever 18 to pick up such sand or gravel as constitutes the desired excavation. Subsequent actuation of control levers 25 and 19, cooperating with the foot-actuated horizontal swinging of the reach frame, disposes the bucket in a suitable position whereby the load, through cord 31, may be discharged into a miniature truck, wagon or such other receptacle as may be desired.

The invention will, it is believed, be evident from the foregoing, and while I have illustrated and herein described a preferred embodiment now best seen to attain the objectives contemplated, it is not my intention to particularly confine myself except by the scope of the hereto annexed claims.

What I claim, is:—

1. In a power shovel controlled by the feet and hands of an operator, a skid-runner base and a frame arranged for swivel activity thereon, said frame comprising a reach, a pair of spaced-apart crank-configured members having the elbow portions arranged for straddling engagement over said reach, a transversely disposed pintle securing said members and reach for pivotal activity, a dipper-stick fulcrumed to the outer extremity of said pair of members, and a dipper thereon, a control lever for actuating said pair of members and integral therewith, a lever pivoted to said pintle, a link carried by said second-mentioned lever and engageable with said dipper-stick in offset disposition of its fulcrum, a cross-bar pivoted medially of its length to said reach forwardly of the swivel axis of the latter, a saddle supported on the reach rearwardly of said swivel axis, a link pivotally interconnecting an end of said cross-bar to the base, and means to open said dipper to discharge the contents therefrom.

2. A child's power shovel of a character affording manual operation of the same responsive to movement of the feet and hands of the operator, comprising a base, skid-runners therefor, a reach pivotally mounted on said base in offset disposition of its center for horizontal swivel activity, a saddle supported on the short end of said reach, an arm pivotally mounted on the long end of said reach and adapted for arcuate activity in a vertical plane, means for controlling the activity of said arm, a horizontal bolt mounted in the outer end of said arm, a dipper-stick fulcrumed on said bolt, a dipper thereon, means carried by said reach and connected to said dipper-stick for controlling the activity of said dipper-stick, means carried by said reach for controlling the horizontal

swivel activity of said reach, and means for discharging the dipper.

3. A child's manually controlled power shovel of a character affording vertical compound motion about horizontal axes, comprising a frame, an arm pivoted for vertical arcuate activity on said frame, a dipper-stick pivoted to said arm in offset disposition of the arm axis, a dipper on said dipper-stick, a lever fixed to said arm for controlling the same, a second lever pivoted on said frame, and a link pivotally connected at its ends to said second lever and to said dipper-stick.

4. In a toy of a character affording swivel activity about a vertical axis, a base, a frame mounted for horizontal swivel activity on said base, and foot-actuated means for controlling said activity comprising a foot-contacting cross-bar pivoted medially of its length to the frame, and a link pivoted to one arm of said cross-bar and to the base.

5. A child's manually operated power shovel of a character affording swivel activity about a vertical axis, comprising a base, and a dipper-supporting frame swiveled on said base, of means for controlling said swivel action, said means comprising two arms respectively pivoted to the frame and base and pivotally interconnected between their respective pivotal connections with the frame and base.

6. Operating mechanism comprising a base, a reach having a vertical axis of rotation in the base, an operating lever mounted on the reach, movable therewith, and also having a path of movement in a vertical plane, a saddle mounted on the reach, said lever being operable from the saddle, a cross-bar pivoted intermediate its ends to the reach, and means for swinging the reach on its vertical axis by the actuation of the cross-bar.

7. A toy comprising a base, a reach having a vertical axis of rotation in the base, a saddle mounted on the reach, means supported by the reach for turning the latter on its vertical axis, an arm pivotally mounted on the reach for rocking movement in a vertical plane, a tool pivotally carried by the arm, and means pivotally carried by the reach for actuating said tool and operable from said saddle.

8. In a toy shovel, a base, a frame mounted thereon in offset disposition of the frame center and arranged for swivel activity in a horizontal plane, a saddle mounted upon the short section of the frame, a foot lever pivoted intermediate its ends to the frame and adjacent the end of the long section thereof, an arm mounted upon the long section of said frame and having a horizontal axis for activity in a vertical plane, and a second arm mounted on said first arm and provided with a scoop and having a horizontal axis for activity in a vertical plane, both of said arms being manually operable, and a link pivoted at one end to one end of the foot lever and at its other end to the base.

9. A toy comprising a base, a platform secured to said base and having an upwardly extending pivot element rising therefrom, a frame rotatable about the pivot element, mounted on said platform and including a seat above said platform, a rocker arm pivotally mounted intermediate its ends on said frame for swinging movement in a vertical plane, one end of said rocker arm forming a handle, a working tool pivotally mounted on the opposite end of said rocker arm, and means for actuating said tool, said means being pivotally carried by said frame.

10. In a toy, a base, supporting means secured to said base and having an upwardly extending pivot element rising therefrom, a frame mounted on said supporting means and rotatable about said pivot element and having a saddle supported rearwardly of said pivot element, a pair of connected arms arranged at an angle to each other, and constituting a crank lever, said crank lever being pivotally carried by said frame forwardly of said pivot element for swinging motion in a substantially vertical plane, a dipper-stick pivoted adjacent the remote end of said crank lever, a scoop carried by said dipper-stick, and means carried by said frame for actuating said dipper-stick and operable from said saddle.

11. In a toy of a character affording swivel activity about a vertical axis, a base, a frame mounted for swivel activity on said base and having a seat member, a hand-operable tool-supporting arm movably mounted relative to said base and frame, a tool supported by said arm, and means for controlling the swivel activity of said frame comprising a foot-contacting cross-bar pivoted medially of its length to the frame, and a link pivoted to one arm of said cross-bar and to the base.

12. Manually operable excavating apparatus of a character affording compound vertical motion about substantially horizontal axes, said apparatus comprising a frame, a crank lever pivotally mounted on said frame, a dipper-stick pivotally carried by one arm of said crank lever, the other arm of said crank lever constituting a control lever for operating said crank lever, a dipper on said dipper-stick, and a member connected to said dipper-stick for operating the same.

13. Excavating apparatus comprising a base, a frame pivotally mounted on said base for substantially horizontal swivel activity, a seat on said frame, means connecting said base and said frame for swivelling said frame, said means including a cross-bar on said frame and being operable by the feet of an operator seated upon said seat, and excavating mechanism mounted on said frame,

said mechanism being manually operable by the operator seated on said seat.

14. Excavating apparatus as defined in claim 13, wherein said excavating mechanism comprises a dipper, means carrying said dipper for compound vertical motion, said means including two pivotally mounted members, and means for locking one of said members so as to restrict the vertical motion of said dipper to a simple vertical motion.

Signed at Seattle, Washington, this 6th day of August, 1930.

OTTO F. OPPERMAN.