634831

FORM 1 SPRUSON & FERGUSON

COMMONWEALTH OF AUSTRALIA

PATENTS ACT 1952

APPLICATION FOR A STANDARD PATENT

Henningsen Foods, Inc., of 2 Corporate Park Drive, White Plains, New York, 10604, UNITED STATES OF AMERICA, hereby apply for the grant of a standard patent for an invention entitled:

Mechanism and Method for Agglomerating Food Powders

which is described in the accompanying complete specification.

Details of basic application(s):-

Basic Applic. No:	Country:	Application Date:
465,461	US	16 January 1990

The address for service is:-

Spruson & Ferguson
Patent Attorneys
Level 33 St Martins Tower
31 Market Street
Sydney New South Wales Australia

DATED this TWENTY FIFTH day of OCTOBER 1990

Henningsen Foods, Inc.

By: J. Gibson

Registered Patent Attorney

TO: THE COMMISSIONER OF PATENTS
OUR REF: 140825
S&F CODE: 55590

5845/5

S 018077 251090

SPRUSON & FERGUSON

COMMONWEALTH OF AUSTRALIA

PATENTS ACT 1952

DECLARATION IN SUPPORT OF A CONVENTION APPLICATION FOR A PATENT

In support of the convention application made for a patent for an invention entitled:

Mechanism and Method for Agglomerating Food Powders

I/~~We~~, William E. Dumke, Vice President
[full name of declarant(s)]

of Henningsen Foods, Inc.,
[full address of declarant(s) - not post office box]

of 2 Corporate Park Drive, White Plains, New York, 10604

United States of America

do solemnly and sincerely declare as follows:

1. I am/~~We are~~ authorised by Henningsen Foods, Inc., the applicant for the patent to make this declaration on its behalf.

2. The basic application as defined by Section 141 of the Act was made in United States of America on 16 January 1990 by Dwight H. Bergquist, Gary D. Lorimor and Thomas E. Wildy.

3. Dwight H. Bergquist, Gary D. Lorimor and Thomas E. Wildy, all of 14334 Industrial Road, Omaha, Nebraska, 68144, United States of America

respectively, are the actual inventors of the invention and the facts upon which the applicant is entitled to make the application are as follows:-

The applicant is the assignee of the invention from the actual inventors.

4. The basic application referred to in paragraph 2 of this Declaration was the first application made in a Convention country in respect of the invention the subject of the application.

DECLARED at White Plains, New York this 14th day of September 1990

Henningsen Foods, Inc.

William E. Dumke ~~Vice President~~

Signature of Declarant(s)

William E. Dumke
Vice President

TO: THE COMMISSIONER OF PATENTS
AUSTRALIA
S&F REF 14085
KRS/9416D

AU9064996

(12) PATENT ABRIDGMENT (11) Document No. AU-B-64996/90
(19) AUSTRALIAN PATENT OFFICE (10) Acceptance No. 634831

(54) Title
SPRAY DRYING FOOD

International Patent Classification(s)
(51)[5] **B01D 001/18** **B01J 002/04**

(21) Application No. : **64996/90** (22) Application Date : **25.10.90**

(30) Priority Data

(31) Number	(32) Date	(33) Country
465461	**16.01.90**	**US UNITED STATES OF AMERICA**

(43) Publication Date : **18.07.91**

(44) Publication Date of Accepted Application : **04.03.93**

(71) Applicant(s)
HENNINGSEN FOODS, INC.

(72) Inventor(s)
DWIGHT H. BERGQUIST; GARY D. LORIMOR; THOMAS E. WILDY

(74) Attorney or Agent
SPRUSON & FERGUSON , GPO Box 3898, SYDNEY NSW 2001

(56) Prior Art Documents
US 4815958
US 4394394
GB 965968

(57) Claim

1. A spray drying mechanism for agglomerating powdered food comprising a drying chamber, a spray nozzle extending into the said drying chamber, means for supplying said spray nozzle with an agglomerating medium, means for causing said spray nozzle to spray said agglomerating medium into said drying chamber, means for directing powdered food into said drying chamber, said powdered food directing means comprising means for impinging the powdered food against the agglomerating medium being sprayed from the spray nozzle into the drying chamber in order to agglomerate the powdered food, means being provided to spray said agglomerating medium into the drying chamber in a cone-shape configuration and wherein means are provided to impinge said powdered food against the cone-shaped configuration of the agglomerating medium, the said spray nozzle being located in front of the powdered food directing means so that powdered food is impinged against the rear of the cone-shaped configuration, said spray nozzle having a feed pipe extending rearwardly therefrom and said powdered food directing means being a conduit surrounding the spray nozzle feed pipe in spaced relationship thereto to form a space between which the powdered food moves, a hot air tube extending into said drying chamber, means for directing hot air into the drying chamber through said hot

.../2

air tube, said powdered food conduit being mounted within and in axial spaced relationship to said hot air tube.

2. A spray drying mechanism for agglomerating powdered food comprising a drying chamber, a spray nozzle extending into the said drying chamber, means for supplying said spray nozzle with an agglomerating means, means for causing said spray nozzle to spray said agglomerating medium into said drying chamber, means for directing powdered food into said drying chamber, said powdered food directing means comprising means for impinging the powdered food against the agglomerating medium being sprayed from the spray nozzle into the drying chamber in order to agglomerate the powdered food, means being provided to spray said agglomerating medium into the drying chamber in a cone-shape configuration and means being provided to impinge said powdered food against the cone-shaped configuration of the agglomerating medium, the said spray nozzle being located in front of the powdered food directing means so that powdered food is impinged against the rear of the cone-shaped configuration, said spray nozzle having a feed pipe extending rearwardly therefrom and said powdered food directing means being a conduit surrounding the spray nozzle feed pipe in spaced relationship thereto to form a space between which the powdered food moves, a plenum, said drying chamber being connected to said plenum by a plenum tube surrounding said powdered food piping and in spaced relationship thereto in order to permit hot air to move from a plenum into drying chamber.

13. A method of agglomerating powdered food in a drying chamber, comprising spraying an agglomerating medium in the drying chamber, directing powdered food into the drying chamber, impinging the powdered food against the agglomerating medium as the agglomerating medium is being sprayed into the drying chamber in order to agglomerate the powdered food, said agglomerating medium being sprayed into the drying chamber in a cone-shape configuration, said powdered food being impinged against the cone-shaped configuration of the agglomerating medium, the said powdered food being impinged against the rear of the cone-shaped configuration of the agglomerating medium, the powdered food moving in a path surrounding the path of the agglomerating medium before each is directed in the drying chamber, hot air being directed into the drying chamber and the hot air moving in a path surrounding the path of the powdered food before each is directed into the drying chamber.

634831

S & F Ref: 140825

FORM 10

COMMONWEALTH OF AUSTRALIA

PATENTS ACT 1952

COMPLETE SPECIFICATION

(ORIGINAL)

FOR OFFICE USE:

Class Int Class

Complete Specification Lodged:
Accepted:
Published:

Priority:

Related Art:

Name and Address of Applicant: Henningsen Foods, Inc.
2 Corporate Park Drive
White Plains New York 10604
UNITED STATES OF AMERICA

Address for Service: Spruson & Ferguson, Patent Attorneys
Level 33 St Martins Tower, 31 Market Street
Sydney, New South Wales, 2000, Australia

Complete Specification for the invention entitled:

Mechanism and Method for Agglomerating Food Powders

The following statement is a full description of this invention, including the best method of performing it known to me/us

5845/6

MECHANISM AND METHOD FOR AGGLOMERATING FOOD POWDERS

Background

The present invention relates to spray drying of food powders and and more particularly to an improved mechanism and method for spray drying of food powders which results in agglomeration of the dried food powders.

Many spray dried food powders do not disperse readily in water. They may also be dusty and not very free-flowing. Agglomeration of dried food powders is a means for giving the product good dispersing and dissolving properties, making the product free-flowing and reducing its dustiness. It has been found that conventional agglomerating procedures produce a considerable number of fine powder which must be sifted away from the agglomerates. Moreover, the agglomerated food powders formed are not of a uniform size. In addition, the number of oversized particles are produced by existing mechanism which must be removed and separated from the particles by a screen or some other means.

In several different kinds of existing agglomeration equipment, a two-step procedure is usually required whereby the powders are wetted in order to agglomerate the particles, and then the wetted particles are dried in separate equipment to the desired moisture level. Production of a higher percentage of oversized material and fine powder is the result of such procedures. These agglomerating procedures which use a one-step process, for example in a spray dryer, do not mix the powder with the agglomerating liquid sufficiently enough to give uniform sized agglomerates. In addition, too much fine powder, as well as too many coarse materials, are produced by such procedures.

United States Patent No. 3,621,902 shows hot air being blown against a spray of milk foam ejected from a nozzle which surrounds the spray nozzle. It is believed that the purpose is to produce powdered milk without any burnt particles. United States Patent No. 4,640,839 shows an agglomeration process in which a powdered water-soluble material is agglomerated by projecting the material in a stream through a moistening zone and directing steam through it. United States Patent No. 3,700,461 shows an agglomerator in which the material is wetted and suspended in a gaseous medium. United States Patent No. 3,584,097 shows powder subjected to an upwardly flowing pulsating air stream and injected with a liquid binder. United States Patent No. 4,042,653 shows an agglomerating process in which atomized droplets are dried and sprayed with a fluid binder. None of these prior patents disclose the invention which is disclosed and claimed herein.

Brief Description of the Invention

An object of the present invention is to try to overcome or at least reduce the above disadvantages of the prior art and to provide an improved mechanism and method of spray drying food powders in which spray dried powders can be easily and inexpensively agglomerated with existing conventional spray drying equipment.

Accordingly, in a first aspect, the invention provides a spray drying mechanism for agglomerating powdered food comprising a drying chamber, a spray nozzle extending into the said drying chamber, means for supplying said spray nozzle with an agglomerating medium, means for causing said spray nozzle to spray said agglomerating medium into said drying chamber, means for directing powdered food into said drying chamber, said powdered food directing means comprising means for impinging the powdered food against the agglomerating medium being sprayed from the spray nozzle into the drying chamber in order to agglomerate the powdered food, means being provided to spray said agglomerating medium into the drying chamber in a cone-shape configuration and wherein means are provided to impinge said powdered food against the cone-shaped configuration of the agglomerating medium, the said spray nozzle being located in front of the powdered food directing means so that powdered food is impinged against the rear of the cone-shaped configuration, said spray nozzle having a feed pipe extending rearwardly therefrom and said powdered food directing means being a conduit surrounding the spray nozzle feed pipe in spaced relationship thereto to form a space between which the powdered food moves, a hot air tube extending into said drying chamber, means for directing hot air into the drying chamber through said hot air tube, said powdered food conduit being mounted within and in axial spaced relationship to said hot air tube.

AUSTRALIAN PATENT OFFICE

In a second aspect, the invention provides a method of agglomerating powdered food in a drying chamber, comprising spraying an agglomerating medium in the drying chamber, directing powdered food into the drying chamber, impinging the powdered food against the agglomerating medium as the agglomerating medium is being sprayed into the drying chamber in order to agglomerate the powdered food, said agglomerating medium being sprayed into the drying chamber in a cone-shape configuration, said powdered food being impinged against the cone-shaped configuration of the agglomerating medium, the said powdered food being impinged against the rear of the cone-shaped configuration of the agglomerating medium, the powdered food moving in a path surrounding the path of the agglomerating medium before each is directed in the drying chamber, hot air being directed into the drying chamber and the hot air moving in a path surrounding the path of the powdered food before each is directed into the drying chamber.

An advantage of at least some embodiments of the present invention is that they provide an improved mechanism and method of spray drying food powders in which the spray dried powders are agglomerated in a single step.

Another advantage of the present invention is that it provides an improved mechanism and method of spray drying food powders which results in dry agglomerations which are of substantially uniform size.

A further advantage of the present invention is that it provides an improved mechanism and method and method of spray drying food powders in which the agglomerations formed contain little, if any, fine powder.

A still further advantage is that agglomerations are produced which do contain no, or little, oversize material.

Other and further objects of the invention will be obvious upon an understanding of the illustrative embodiment about to be described, or will be indicated in the appended claims and various advantages not referred to herein will occur to one skilled in the art upon employment of the invention in practice.

AUSTRALIAN PATENT OFFICE
FHK00883E

Description of the Drawing

A preferred embodiment of the invention has been chosen for purposes of illustration and description and is shown in the accompanying drawings forming a part of the specification, wherein:

Fig. 1 is a schematic perspective view showing the spray drying equipment embodying the present invention.

Fig. 2 is a schematic view showing the details of the spray drying equipment which is the subject matter of the present invention.

Description of the Invention

Referring to the drawings, and more particularly to Fig. 1, a spray dryer assembly 1, which may be a conventional spray dryer, comprises a drying chamber 2, an outer wall 3 and an inner wall 4 spaced inwardly from an outer wall 3 to form a plenum chamber 5 between walls 3 and 4. As is usual in such spray dryers, the plenum chamber 5 is adapted to have hot air H drawn therewithin. Mounted on and extending through the inner wall 4 are a plurality of plenum tubes 6 connecting the plenum chamber 5 to the drying chamber 2 so that hot air H moves from the plenum 5 into the drying chamber 2.

A spray drying nozzle assembly 10 is mounted within and spaced from the plenum tube 6 to leave a passageway 7 through which the hot air H can move from the plenum to the inner drying chamber 2. Each spray drying nozzle assembly 10 comprises a spray drying nozzle 11 mounted at the forward end of an agglomerating liquid feed pipe 12 and a powdered food tube 13 surrounding the pipe 12. The nozzle 11 is so designed to spray the agglomerating liquid L sprays out into the drying chamber 2 in a cone-shaped configuration C as best illustrated in Fig. 2. The nozzle 11 receives agglomerating liquid L from an agglomerating liquid feed pipe 12 which extends within and through the powdered food tube 13 in spaced relationship thereto to form a space 8 through which the powdered food F moves.

The powdered food tube 13 terminates short of the nozzle 11 and is adapted to convey the powdered food F from a feeder 14 to the powdered food tube 13 by means of a blower 15 and conduit pipes 16 and 19. The blower 15 receives air from a source through a filter 17 and the air pipe 18. The blower 15 receives powdered food F from feeder 14 through piping 19. The air mixes with the powdered food F and is directed through the food tube 13 and into the drying chamber 2 and into contact with the cone-shape configuration C formed by the agglomeration liquid L where it mixes therewith to form agglomerations A.

Preferably, the powdered food piping 16 is split so that powdered food F enters the drying chamber 2 in a plurality of locations through a plurality of food tubes 13. The agglomerating liquid pipe 12 is also split in a similar manner so that it enters the drying chamber 2 through nozzles 11 in a plurality of locations together with the food conduit tubes 13.

Existing spray dryers usually have multiples of 4, 6, etc. nozzles. In the drawing, the spray dryer 1 is shown as being a 4 nozzle spray dryer. Two upper nozzles 11 (and associated piping and plenum tubes) are located near the top of the spray dryer 1 and two lower nozzles would normally be located below the upper nozzles 11 near the bottom of the dryer. In Fig. 1 of the drawing two lower nozzles are shown as having been removed and the places where they would go through the outer wall 3 of the dryer are shown in broken lines. While the lower nozzles have been removed (or have been inactivated), the inner plenum tubes 6 remain in place in the plenum wall 4 so that hot air H can move from the plenum 5 into the spray dryer chamber 2 through all of the plenum tubes 6, i.e., both the upper ones with the spray nozzles therein and the lower ones without the spray nozzles. This permits the agglomerated particles A which drift down after agglomeration to pass through the hot air being ejected into the inner chamber 2 from the lower plenum tubes 6 before settling on a collection station at the bottom of the inner drying chamber 2. If desired, the lower spray nozzles may be left in place and be merely turned off (without being physically removed) so that although they are drying, hot air H will still flow through both the upper and lower plenum tubes 6 into the drying chamber 2.

As set forth above, the dry powdered food F to be agglomerated is deposited into the feeder 15 which feeds the material at a uniform rate into a pneumatic conveying system P comprising the conduits 18, 19 and 16 as well as the blower 15. The air for this pneumatic conveyor system P is first filtered by a filter 17 before it picks up the powdered food F from conduit 18 at the inlet of the blower 15. The blower 15 tends to mix the powdered food F uniformly with the air, conveying it through the blower 15 into pipe 16 leading to the food tube 13 surrounding the agglomerating liquid piping 12. Powdered food F is thus introduced to the drying chamber 2 behind each spray nozzle 11. The velocity of the powdered food F coming into the drying chamber 2 is high enough to cause impingement of powdered food F onto the back of the spray of agglomerating liquid L in the area of the hollow cone C formed by the agglomerating liquid L before the spray breaks into fine particles and dries. Thus, the particles of food powder F introduced into the dryer 2 are wetted and come together with agglomerating liquid particles L while within the hollow cone area C of the agglomerating liquid spray L which then break up and form uniformly sized agglomerates A.

The hot air stream H enters the drying chamber 2 from the plenum 5 through the spaces 7 in the plenum tubes 6 thereby drying the agglomerated particles A very rapidly. The agglomerated particles A are dried in the drying chamber 2 to the desired moisture level by controlling the inlet and outlet temperatures of the spray drying chamber 2, the rate at which the agglomerating liquid L is fed to the drying chamber 2 and the rate at which the feed powder F is fed to the drying chamber 2. The agglomerated dried product A formed in the drying chamber 2 drifts to the bottom and is then collected and removed by any known powder removal system (not shown).

It has been determined that air velocity of about 6,500 ft. per minute (73 miles per hour or 108 ft. per second) is the preferred velocity to convey the powdered food F through the annular spaces 8 of the powdered food tube 13 in order to obtain the preferred agglomerated particles A. Somewhat lower or higher velocities can be used, depending on the food product which is being agglomerated.

If a multiple nozzle dryer is used, splitting the pneumatic system P carrying the air/food powder F into a plurality of streams is desired so that each nozzle 11 is fed substantially the same quantities at substantially the same rate. Fig. 1 shows a spray dryer which can be used as a four-nozzle dryer or as a dryer with less than four nozzles. The pneumatic air/food stream F is split into two streams when feeding the two upper nozzles of the four-nozzle dryer. However, the two lower nozzles are not used but are removed or somehow shut off. In the drawing they are shown removed and broken lines indicate where they would have been located. However, hot air H is allowed to pass from the plenum chamber 5 through the bottom plenum tubes 6 (without nozzles or [illegible] tubes) and into the drying chamber 2. This creates a hot air cushion below the agglomerating cones C through which the agglomerated particles A must pass as they drift downward before reaching the bottom of the drying chamber 2. This assures drying of the agglomerated food particles A to a proper moisture level. It has been found that this same principle may also be used on a 6-nozzle spray dryer where only the upper 3 nozzles are used for spray drying.

Pneumatic conveying air from the pneumatic system

P can come from the room and be introduced into the system without heating, or it can be either heated or cooled, whichever is necessary to give the best product. The air is supplied to the system by the high pressure blower 15 which delivers the proper amount of air at the proper pressure. The powdered food F is fed from the feeder 14 located near the inlet to the blower 15 and which is preferably a variable speed, constant rate feeder, such as a volumetric feeder. Air is filtered through a high efficiency air filtering unit 17 before going to the blower 15.

Various liquids can be sprayed into the drying chamber 2 to serve as the agglomerating liquid L. For example, water may be used as well as any combination of liquids that would act as a carrier for the agglomerated material. In many cases, the liquid which is being spray dried can itself be used as the agglomerating liquid L.

The size of the agglomerates A can be controlled by adjusting the powder rate to the system, i.e., the rate at which the powdered food F is being fed to the system. For example, a high powder rate would give a larger particle size agglomerate than a low powder rate. Furthermore, the rate at which the agglomerating liquid L is fed to the spray nozzle can be controlled to permit production of agglomerate particles A of various sizes. Higher liquid rates result in smaller particles, while lower liquid rates result in larger particles.

An example of a product that was agglomerated and dried by this method was a 30% solids nutrient drink material which consisted mainly of carbohydrates and protein. This material was quite hydroscopic and had a tendency to cake and even become wet when left exposed to the room atmosphere. This material was successfully spray dried into a fine powder and agglomerated by the system described above.

A standard 6-nozzle spray dryer was used utilizing only the top three nozzles in the spray dryer. The powdered food tubes (through which the food powder was conveyed into the drying chamber) surrounding agglomerating liquid feed piping to the nozzles was a 2 inch O.D. S/S tubing with a 1.87" I.D. The feed rate was set at 500 lbs. of food powder per hour, the same rate as the powder produced by the dryer i.e. 1650 lbs. liquid per hour, yielding 500 lbs. powder per hour. Total production rate of agglomerated powder was thus 1,000 lbs. per hour. Little change in moisture level was noted as the machinery was switched from spray dried product to agglomerated product. The dryer was first started with spray drying of the food product with the moisture adjusted to the desired level. The food product was introduced into the dryer through the nozzle tubes and the pneumatic system described above. The spray dryer was a Size 1500 Gentle Air Spray Dryer with 6 nozzles (using only the top 3 nozzles in this case) merely allowing the hot air from the plenum to go through the bottom 3 plenum tubes without any spraying action. By this procedure, a uniform particle size of 200-300 microdiameter agglomerates was obtained which had good dispersing properties when added to water.

It will thus be seen that agglomeration of spray dried products is accomplished by impinging high velocity particles of powdered food against the backside of the cone of agglomerating liquid spray. The powder strikes the liquid spray in the hollow cone section of the spray before the spray breaks into particles and becomes dry. In order to get good sticking of the particles onto the liquid spray, the air and powder should move at a high velocity. The mixture of spray and powder break into agglomerates which dry in the hot air stream of the inlet drying air. In addition, there are numerous materials which can be agglomerated in this manner and numerous combinations of agglomerates which can be used as the agglomerating material.

It will thus be seen that the present invention provides an improved mechanism and method of spray drying food powders in which spray dried powders can be easily and inexpensively agglomerated with existing conventional spray drying equipment in a single step in which the dry agglomerations are of uniform size, contain a little, if any fine powder and do not contain any oversize material.

As many and varied modifications of the subject matter of this invention will become apparent to those skilled in the art from the detailed description given hereinabove, it will be understood that the present invention is limited only as provided in the claims appended hereto.

The claims defining the invention are as follows:

1. A spray drying mechanism for agglomerating powdered food comprising a drying chamber, a spray nozzle extending into the said drying chamber, means for supplying said spray nozzle with an agglomerating medium, means for causing said spray nozzle to spray said agglomerating medium into said drying chamber, means for directing powdered food into said drying chamber, said powdered food directing means comprising means for impinging the powdered food against the agglomerating medium being sprayed from the spray nozzle into the drying chamber in order to agglomerate the powdered food, means being provided to spray said agglomerating medium into the drying chamber in a cone-shape configuration and wherein means are provided to impinge said powdered food against the cone-shaped configuration of the agglomerating medium, the said spray nozzle being located in front of the powdered food directing means so that powdered food is impinged against the rear of the cone-shaped configuration, said spray nozzle having a feed pipe extending rearwardly therefrom and said powdered food directing means being a conduit surrounding the spray nozzle feed pipe in spaced relationship thereto to form a space between which the powdered food moves, a hot air tube extending into said drying chamber, means for directing hot air into the drying chamber through said hot air tube, said powdered food conduit being mounted within and in axial spaced relationship to said hot air tube.

2. A spray drying mechanism for agglomerating powdered food comprising a drying chamber, a spray nozzle extending into the said drying chamber, means for supplying said spray nozzle with an agglomerating means, means for causing said spray nozzle to spray said agglomerating medium into said drying chamber, means for directing powdered food into said drying chamber, said powdered food directing means comprising means for impinging the powdered food against the agglomerating medium being sprayed from the spray nozzle into the drying chamber in order to agglomerate the powdered food, means being provided to spray said agglomerating medium into the drying chamber in a cone-shape configuration and means being provided to impinge said powdered food against the cone-shaped configuration of the agglomerating medium, the said spray nozzle being located in front of

AUSTRALIAN PATENT OFFICE

the powdered food directing means so that powdered food is impinged against the rear of the cone-shaped configuration, said spray nozzle having a feed pipe extending rearwardly therefrom and said powdered food directing means being a conduit surrounding the spray nozzle feed pipe in spaced relationship thereto to form a space between which the powdered food moves, a plenum, said drying chamber being connected to said plenum by a plenum tube surrounding said powdered food piping and in spaced relationship thereto in order to permit hot air to move from a plenum into drying chamber.

3. A spray drying mechanism as set forth in claim 2 wherein said agglomerating medium is a liquid.

4. A spray drying mechanism as set forth in claim 3 wherein means are provided to supply powdered food to the powdered food conduit and agglomerating liquid to the spray nozzle feed pipe.

5. A spray drying mechanism as set forth in claim 4 wherein said drying chamber has upper and lower inlets for the spray nozzle and the directing means and wherein means are provided to use only the upper inlet to agglomerate food powders.

6. A spray drying mechanism as set forth in claim 5 wherein the lower inlet has a plenum tube provided therein to supply hot air to the drying chamber, said plenum tube being located to supply said hot air in the path of the agglomerated powdered food which is dropping after being agglomerated.

7. A spray drying mechanism as set forth in claim 6 wherein said powdered food is pumped by a blower through the conduit.

8. A spray drying mechanism as set forth in claim 7 wherein means are provided to mix air with the powdered food.

9. A spray drying mechanism as set forth in claim 8 wherein a filter is provided to filter the air before it mixes with the powdered food.

10. A spray drying mechanism as set forth in claim 9 wherein means are provided to adjust the powder rate of the system to control the size of the agglomerates formed in which the size of the agglomerates being substantially proportional to the powder rate.

11. A spray drying mechanism as set forth in claim 10 wherein means are provided to adjust the agglomerating liquid rate of the

AUSTRALIAN PATENT OFFICE

system to control the size of the agglomerates formed in which size of the agglomerate is substantially inversely proportional to the liquid rate.

12. A spray drying mechanism as set forth in claim 11 wherein the powdered food is impinged against the cone of the agglomerating liquid at high velocities.

13. A method of agglomerating powdered food in a drying chamber, comprising spraying an agglomerating medium in the drying chamber, directing powdered food into the drying chamber, impinging the powdered food against the agglomerating medium as the agglomerating medium is being sprayed into the drying chamber in order to agglomerate the powdered food, said agglomerating medium being sprayed into the drying chamber in a cone-shape configuration, said powdered food being impinged against the cone-shaped configuration of the agglomerating medium, the said powdered food being impinged against the rear of the cone-shaped configuration of the agglomerating medium, the powdered food moving in a path surrounding the path of the agglomerating medium before each is directed in the drying chamber, hot air being directed into the drying chamber and the hot air moving in a path surrounding the path of the powdered food before each is directed into the drying chamber.

14. The method as set forth in claim 13 wherein said agglomerating medium is a liquid.

15. The method as set forth in claim 14 wherein hot air is supplied to the drying chamber in the path of the agglomerated powdered food after being agglomerated.

16. The method as set forth in claim 15 wherein said powdered food is mixed with air before being directed to the drying chamber.

17. The method as set forth in claim 16 wherein the powder rate is adjustable to control the size of the agglomerates formed and wherein the size of the agglomerates formed is substantially proportional to the powder rate.

18. A spray drying mechanism substantially as hereinbefore described with reference to the drawings.

AUSTRALIAN PATENT OFFICE

rhk/0883E

19. A method of agglomerating powdered food substantially as hereinbefore described with reference to the drawings.

DATED this FIFTH day of JANUARY 1993

Henningsen Foods, Inc.

Patent Attorneys for the Applicant
SPRUSON & FERGUSON

AUSTRALIAN PATENT OFFICE

rhk/0883E

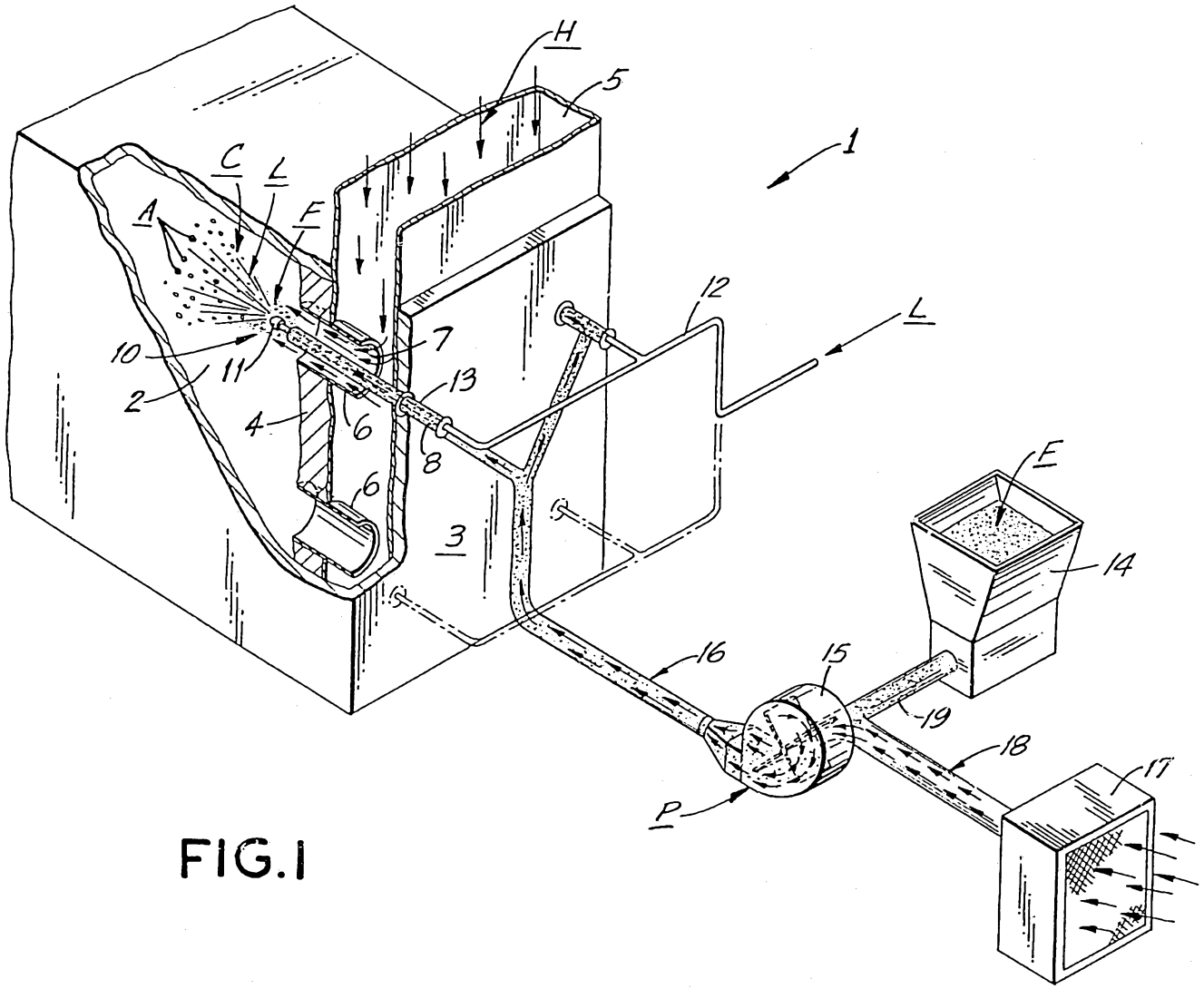

FIG.1

64996/90

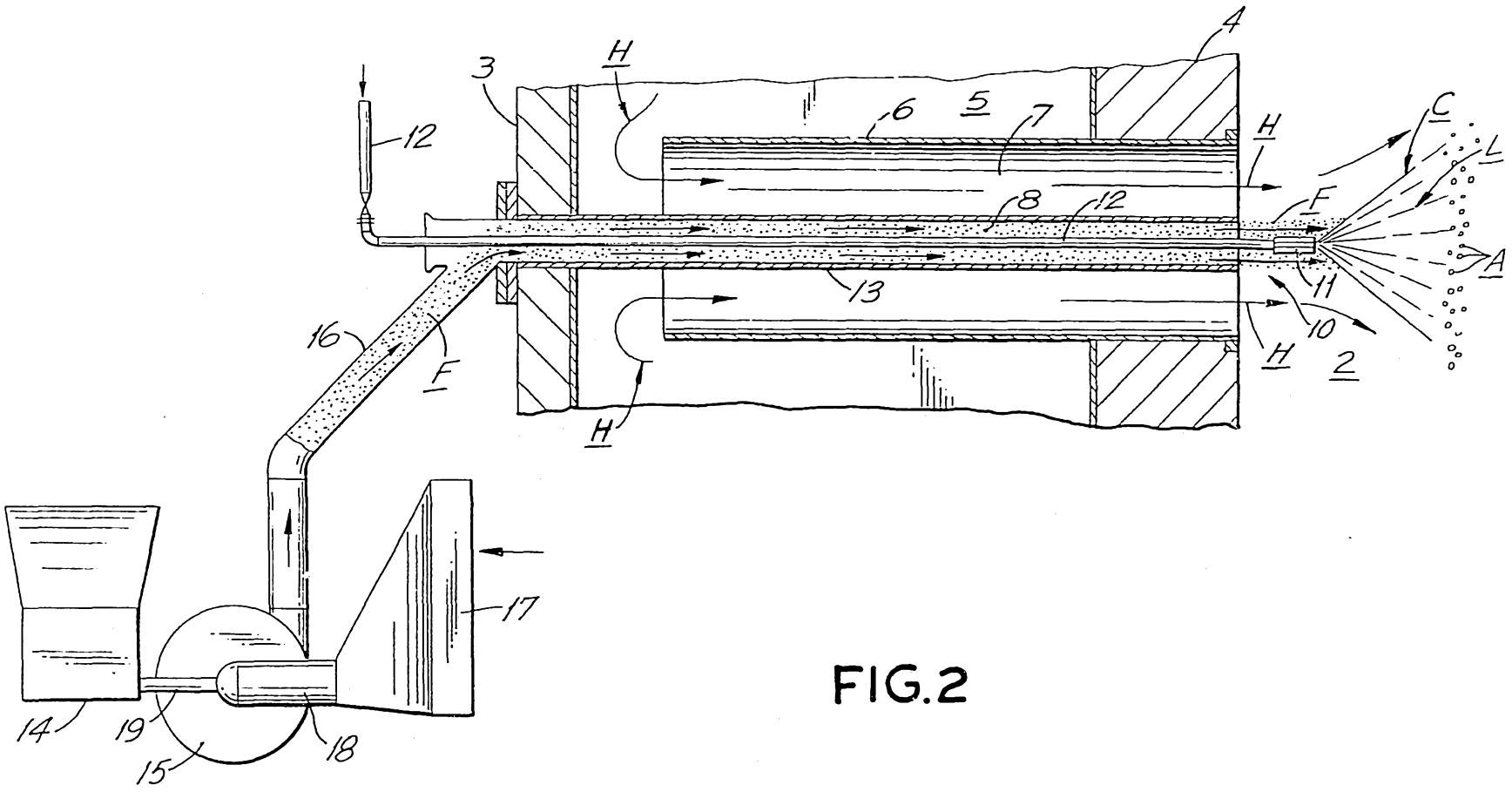

FIG.2