(12) INTERNATIONAL APPLICATION PUBLISHED UNDER THE PATENT COOPERATION TREATY (PCT)

(19) World Intellectual Property Organization
International Bureau

(43) International Publication Date
10 May 2012 (10.05.2012)

PCT

(10) International Publication Number
WO 2012/060176 A1

(51) International Patent Classification:
F02M 25/07 (2006.01) *F02D 9/10* (2006.01)
F02M 35/10 (2006.01)

(21) International Application Number:
PCT/JP2011/072913

(22) International Filing Date:
28 September 2011 (28.09.2011)

(25) Filing Language: English

(26) Publication Language: English

(30) Priority Data:
2010-246772 2 November 2010 (02.11.2010) JP

(71) Applicant *(for all designated States except US)*: **AISIN SEIKI KABUSHIKI KAISHA** [JP/JP]; 1, Asahi-machi 2-chome, Kariya-shi, Aichi 4488650 (JP).

(72) Inventors; and
(75) Inventors/Applicants *(for US only)*: **KONAKAWA Hidefumi** [JP/JP]; c/o AISIN SEIKI KABUSHIKI KAISHA, 1, Asahi-machi 2-chome, Kariya-shi, Aichi 4488650 (JP). **TERAMOTO Hideaki** [JP/JP]; c/o AISIN SEIKI KABUSHIKI KAISHA, 1, Asahi-machi 2-chome, Kariya-shi, Aichi 4488650 (JP).

(74) Agent: **KITAMURA Shuichiro**; 3-3, Nakanoshima 3-chome, Kita-ku, Osaka-shi, Osaka 5300005 (JP).

(81) Designated States *(unless otherwise indicated, for every kind of national protection available)*: AE, AG, AL, AM, AO, AT, AU, AZ, BA, BB, BG, BH, BR, BW, BY, BZ, CA, CH, CL, CN, CO, CR, CU, CZ, DE, DK, DM, DO, DZ, EC, EE, EG, ES, FI, GB, GD, GE, GH, GM, GT, HN, HR, HU, ID, IL, IN, IS, KE, KG, KM, KN, KP, KR, KZ, LA, LC, LK, LR, LS, LT, LU, LY, MA, MD, ME, MG, MK, MN, MW, MX, MY, MZ, NA, NG, NI, NO, NZ, OM, PE, PG, PH, PL, PT, QA, RO, RS, RU, RW, SC, SD, SE, SG, SK, SL, SM, ST, SV, SY, TH, TJ, TM, TN, TR, TT, TZ, UA, UG, US, UZ, VC, VN, ZA, ZM, ZW.

(84) Designated States *(unless otherwise indicated, for every kind of regional protection available)*: ARIPO (BW, GH, GM, KE, LR, LS, MW, MZ, NA, RW, SD, SL, SZ, TZ, UG, ZM, ZW), Eurasian (AM, AZ, BY, KG, KZ, MD, RU, TJ, TM), European (AL, AT, BE, BG, CH, CY, CZ, DE, DK, EE, ES, FI, FR, GB, GR, HR, HU, IE, IS, IT, LT, LU, LV, MC, MK, MT, NL, NO, PL, PT, RO, RS, SE, SI, SK, SM, TR), OAPI (BF, BJ, CF, CG, CI, CM, GA, GN, GQ, GW, ML, MR, NE, SN, TD, TG).

Published:

— *with international search report (Art. 21(3))*

(54) Title: INTAKE SYSTEM OF INTERNAL COMBUSTION ENGINE

FIG.5

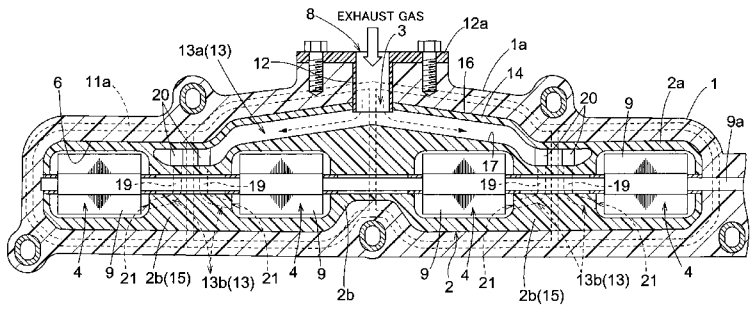

(57) Abstract: An intake system o fan internal combustion engine is provided in which the amount of gas and heat of gas can be introduced uniformly into the respective cylinders and hermeticity of the intake manifold (1) may be less impaired. The intake system includes: an intake manifold (1); a cartridge (2) provided in the intake manifold (1), the cartridge (2) having a plurality of intake channels (4) for supplying air to respective cylinders in the internal combustion engine and valve elements (9) configured to adjust the amounts of intake air taken into the respective cylinders; a as supply portion (3,8) configured to introduce gas discharged from the internal combustion engine into the cylinders, the gas supply portion (3,8) being provided at a center position of the cartridge (2) in the direction of row of the plurality of intake channels (4); and a plurality of gas distribution channels (13) provided on the cartridge (2) and configured to distribute from the gas supply portion (3,8) to the plurality of intake channels (4).

WO 2012/060176 A1

DESCRIPTION

TITLE OF INVENTION

INTAKE SYSTEM OF INTERNAL COMBUSTION ENGINE

TECHNICAL FIELD

[0001] This disclosure relates to an intake system of an internal combustion engine including an intake manifold and a cartridge provided in the intake manifold, the cartridge having a plurality of intake channels for supplying air to respective cylinders in the internal combustion engine and valve elements configured to adjust the amounts of intake air taken into the respective cylinders, further including a gas supply portion provided in the cartridge and configured to introduce gas discharged from the internal combustion engine into the cylinders, and a plurality of gas distribution channels provided in the cartridge so as to distribute from the gas supply portion to the plurality of intake channels respectively.

BACKGROUND ART

[0002] In the related art, the intake system in the internal combustion engine described above is provided with the gas supply portion on a section of the cartridge on one end side in the direction of row of the plurality of intake channels (hereinafter, referred to as "channel row direction".

Then, a gas introducing channel configured to introduce gas (exhaust gas) supplied from the gas supply portion into a center position of the cartridge in the channel row direction is provided on the cartridge, and the gas distribution channels, which are extending to the respective intake channels disposed

on the left and right sides of a terminal position of the gas introducing channel, are connected to a terminal end of the gas introducing channel (for example, see Patent Document 1).

Related Art Document

Patent Document

[0003]

Patent Document 1: Japanese Unexamined Patent Application Publication No. 2005-307960

SUMMARY OF INVENTION

[0004] Therefore, the gas supplied from the gas supply portion passes through the gas introducing channel and the gas distribution channels in sequence while radiating heat to the cartridge.

However, since the gas introducing channel is provided only on a section of the cartridge extending between the side of the gas supply portion and the center position in the channel row direction (hereinafter, referred to as "supply-portion-side section"), the temperature of the supply-portion-side section is liable to rise in comparison with a section on the side where the gas introducing channel is not provided, that is, a section of the cartridge extending from the other end side in the channel row direction and the center position (hereinafter, referred to as "non-supply-portion-side section").

Consequently, the difference between a temperature distribution in the supply-portion-side section and a temperature distribution in the non-supply-portion-side section is increased, which may lead to heat distortion of the

cartridge and impairment of hermeticity of the intake manifold.

In addition, air passing through the intake channels provided in the supply-portion-side section is more vulnerable to temperature rise than air passing through the intake channels provided on the non-supply-portion-side section, and hence combustion characteristics may vary from cylinder to cylinder in the internal combustion engine.

A need thus exists for an intake system of an internal combustion engine which is not susceptible to the drawback mentioned above in which the amount of gas and heat of gas can be introduced uniformly into the respective cylinders and hermeticity of the intake manifold may be less impaired.

[0005] According to a first aspect of this disclosure, an intake system of an internal combustion engine includes: an intake manifold; a cartridge provided in the intake manifold, the cartridge having a plurality of intake channels for supplying air to respective cylinders in the internal combustion engine and valve elements configured to adjust the amounts of intake air taken into the respective cylinders; a gas supply portion configured to introduce gas discharged from the internal combustion engine into the cylinders, the gas supply portion being provided at a center position of the cartridge in the direction of row of the plurality of intake channels; and a plurality of gas distribution channels provided on the cartridge and configured to distribute from the gas supply portion to the plurality of intake channels.

[0006] With the intake system of the internal combustion engine having the above-noted construction, the gas supply portion is provided at a center position of the cartridge in the direction of row of the plurality of intake channels.

Therefore, gas supplied form the gas supply portion can be introduced from the center position of the cartridge to the respective cylinders, and thus gas can be introduced uniformly into the respective cylinders. As a result, the uniform amount of gas and uniform heat of gas can be introduced into the respective cylinders.

Further, even if heat of gas is exerted on the cartridge, it is exerted evenly from the center position of the cartridge toward the right and left intake channels, as a result of which hermeticity of the intake manifold is impaired less easily even if heat distortion of the cartridge virtually occurs.

[0007] According to a second aspect of this disclosure, the lengths of the plurality of gas distribution channels are all the same from the gas supply portion to the intake channels.

[0008] Since the lengths of the plurality of gas distribution channels are all the same from the gas supply portion to the intake channels, gas can be uniformly distributed into the respective cylinders of the internal combustion engine. Thus, the intake system of the internal combustion engine having the above-noted construction can provide a more fuel-efficient internal combustion engine in which the respective cylinders are uniform in combustion efficiency.

[0009] According to a third aspect of this disclosure, the opening areas of the plurality of gas distribution channels are all the same.

[0010] Since the opening areas of the plurality of gas distribution channels are all the same, gas can be uniformly distributed into the respective cylinders of the internal combustion engine. Thus, the intake system of the internal combustion engine having the above-noted construction can

provide a more fuel-efficient internal combustion engine in which the cylinders are uniform in combustion efficiency.

[0011] According to a fourth aspect of this disclosure, openings are formed on respective wall surfaces of the plurality of intake channels as terminal ends of the gas distribution channels, and a gradient is given to each of the gas distribution channels so that the gas distribution channels do not run backward at any position thereof from the gas supply portion to the opening to the side of the gas supply portion with respect to a longitudinal direction of the cartridge.

[0012] When gas is circulated in the gas distribution channels with the temperature of the cylinders being increased insufficiently, for example, water contained in gas is cooled in the gas distribution channels and easily condensed.

With the above-noted construction, the falling gradient can be provided over the entire length of the gas distribution channels.

Thus, condensed water is allowed to reliably flow down to the outlets of the gas distribution channels to be exhausted to the intake channels.

Therefore, the intake system of the internal combustion engine having the above-noted construction can prevent water (condensed water) contained in gas from being accumulated, as a result of which the gas distribution channels can be constantly maintained clean.

[0013] According to a fifth aspect of this disclosure, the cartridge is formed of a resin material having higher heat resistant property than a resin material which constitutes the intake manifold.

[0014] Although heat of the engine is transmitted to the

intake manifold, the manifold is cooled by air circulating within its interior and thus would not be heated to such a high temperature. Thus, the manifold can be made of a general-purpose resin material. On the other hand, the cartridge provided with the gas distribution channels for distributing gas mainly is placed under high temperature all the time. Any additional function, that is, providing heat resistant property to the intake manifold and the cartridge, for example, may result in increase in cost of the resin material.

Therefore, by forming the cartridge with a resin material having higher heat resistant property than a resin material which constitutes the intake manifold, the manufacturing cost for the intake system can be reduced.

[0015] The characteristic construction of the intake system of the internal combustion engine as defined in claim 1 may also be described as an intake system of an internal combustion engine including: an intake manifold; a cartridge provided in the intake manifold, the cartridge having a plurality of intake channels for supplying air to respective cylinders in the internal combustion engine and valve elements configured to adjust the amounts of intake air taken into the respective cylinders; a gas supply portion provided on the cartridge at a center position of the cartridge in the direction of row of the plurality of intake channels and configured to introduce gas discharged from the internal combustion engine to the cylinders; and a first distribution channel provided in the cartridge so as to extend from the gas supply portion in the direction of row of the plurality of intake channels, and a second distribution channel extending from the first

distribution channel to the plurality of intake channels.

BRIEF DESCRIPTION OF DRAWINGS

[0016] FIG. 1 is an exploded perspective view of an intake system of an internal combustion engine;

FIG. 2 is a perspective view of the intake system in the internal combustion engine;

FIG. 3 is a cross-sectional view taken III-III line in FIG. 4;

FIG. 4 is a front view of an intake manifold viewed from the side of a cartridge;

FIG. 5 is a cross-sectional view taken V-V line in FIG. 3;

FIG. 6 is a vertical cross-sectional view of the intake channels according to the second embodiment;

FIG. 7 is a vertical cross-sectional view of the intake channels according to the third embodiment; and

FIG. 8 is a vertical cross-sectional view of the intake channel according to the fourth embodiment.

DESCRIPTION OF EMBODIMENTS

[0017] Referring now to the drawings, embodiments disclosed here will be described.

[First Embodiment]

FIGS. 1 to 5 show an intake system of an internal combustion engine according to the present invention and, more specifically, to an intake manifold of a four-cylinder gasoline engine for an automotive vehicle.

The intake manifold is assembled between a throttle body, not shown, and an intake port of a cylinder head of the engine.

[0018] As shown in FIGS. 1 and 2, the intake manifold includes a resin-made intake manifold 1, a resin-made cartridge 2 to be joined to an intake port connecting surface of the cylinder head, not shown, and to be provided on the intake manifold 1, and an exhaust gas supply portion 3 configured to cause exhaust gas as an example of gas discharged from the engine to circulate through respective cylinders in the engine.

[0019] The cartridge 2 is formed with a plurality of (four in the embodiment disclosed here) intake channels 4 configured to supply air (intake air) in the intake manifold 1 to respective cylinders in the engine so as to be arranged substantially in the horizontal direction.

The intake manifold 1 is formed of heat-resistance resin material such as nylon 6, or nylon 6,6. The cartridge 2 is formed of a high-heat resistance resin material such as polyphenylene sulfide resin (PPS) or aromatic nylon (PPA), which have higher heat resistant properties than the resin material which constitutes the intake manifold 1.

[0020] The intake manifold 1 includes a throttle body mounting portion 5 and a cartridge mounting opening 6 where the cartridge 2 is inserted and mounted provided so as to oppose to each other.

The intake manifold 1 is formed into the shape of substantially bilateral symmetry with respect to a centerline X of the throttle body mounting portion 5 so as to increase in width as it goes toward the side of the cartridge mounting opening 6.

The cartridge mounting opening 6 is formed into a laterally elongated shape in bilateral symmetry.

[0021] An upper wall portion 1a of the intake manifold 1

is provided with a blow-by gas introducing portion 7 to which a blow-by gas introducing pipe is connected and an exhaust gas introducing portion 8 to which an exhaust gas introducing pipe for introducing exhaust gas from the engine is connected. The blow-by gas introducing portion 7 and the exhaust gas introducing portion 8 are arranged so as to be aligned along the centerline X.

[0022] As shown also in FIGS. 4 and 5, the cartridge 2 has a laterally elongated shape in bilateral symmetry having an outer peripheral wall 2a to be joined to an inner peripheral surface along the cartridge mounting opening 6 of the intake manifold 1 and three partition walls 2b partitioning the inside of the outer peripheral wall 2a into the four intake channels 4.

[0023] Valve elements 9 configured to adjust the amount of intake air taken into the respective cylinders in the engine are supported by a spindle 9a, which is in turn supported at both ends thereof by the outer peripheral wall 2a in a state of penetrating through the respective partition walls 2b at center positions in the longitudinal direction inside the respective intake channels 4.

The degrees of opening of the respective valve elements 9 are adjusted by the driving of an electric motor 10.

[0024] As shown in FIGS. 3 and 4, the cartridge 2 is formed with a port joint surface 11 which is joined to the intake air port connecting surface of the cylinder head, not shown, with the intermediary of a gasket 11a therebetween, and the cartridge 2 is inserted into the cartridge mounting opening 6 with the port joint surface 11 directed outward.

The port joint surface 11 is formed of an outward oriented

end surfaces of the outer peripheral wall 2a and the partition walls 2b.

In the embodiment disclosed above, the cartridge 2 is not welded to the intake manifold 1. However, the cartridge 2 may be welded to the intake manifold 1 by an ultrasonic welding method or the like.

[0025] As shown in FIGS. 3 and 5, the exhaust gas introducing portion 8 includes a metallic short pipe 12 provided with a connecting flange 12a to which an exhaust gas introducing pipe, not shown, is connected.

The exhaust gas supply portion 3 is configured to supply exhaust gas introduced from the short pipe 12 into the exhaust gas introducing portion 8 so as to circulate to the respective cylinders, and is provided at a center position of the cartridge 2 in the direction of arrangement of the plurality of intake channels 4.

[0026] The cartridge 2 is provided with the plurality of exhaust gas distribution channels 13 distributing from the exhaust gas supply portion 3 to the plurality of intake channels 4.

The exhaust gas distribution channel 13 includes a first distribution channel 13a provided on an upper outer peripheral wall 14 of the outer peripheral wall 2a of the cartridge 2 so as to be branched in bilateral symmetry as shown in FIG. 5, and second distribution channels 13b provided respectively in two compartment walls 15 (2b) which partition the adjacent intake channels 4 at longitudinal end portions of the cartridge 2 as shown in FIG. 4.

Two of the second distribution channels 13b are provided for the each compartment wall 15 for achieving communication

with the respective intake channels 4 on both sides of the compartment wall 15.

[0027] The first distribution channel 13a is branched from the exhaust gas supply portion 3 obliquely downward in lateral symmetry, and the two second distribution channels 13b are communicated respectively with terminal end portions of the first distribution channel 13a.

The first distribution channel 13a is formed between a first distribution channel forming groove 17 formed on an upper end surface 16 facing the intake manifold side of the upper outer peripheral wall 14 and a resin plate 18 joined to the upper end surface 16 by ultrasonic welding so as to cover the first distribution channel forming groove 17 as shown in FIGS. 3 and 4.

The second distribution channels 13b are formed between second distribution channel forming grooves 19 formed on the port joint surface 11 so as to extend along the vertical direction, and an intake port connecting surface of the cylinder head, not shown, which is joined to the port joint surface 11.

[0028] The short pipe 12 for introducing the exhaust gas is inserted into a through hole formed in the upper wall portion 1a of the intake manifold 1 so as to communicate with a lateral center position of the first distribution channel forming groove 17, and hence is in communication with the first distribution channel forming groove 17.

[0029] Communication holes 20 which bring the first distribution channel forming groove 17 into communication with the two second distribution channel forming grooves 19 are formed so as to penetrate through the cartridge 2 at positions corresponding to left and right end portions of the first

distribution channel forming groove 17.

Therefore, the cartridge 2 is provided with the plurality of the exhaust gas distribution channels 13 which distribute from the exhaust gas supply portion 3 to the plurality of intake channels 4, and openings 21 are formed respectively on wall surfaces of the plurality of intake channels 4 as terminal end portions of the exhaust gas distribution channels 13.

[0030] The first distribution channel forming groove 17 is branched from the exhaust gas supply portion 3 laterally along the longitudinal direction of the cartridge and also along the direction of downward inclination.

The two second distribution channel forming grooves 19 formed so as to extend downwardly corresponding respectively to the left and right end portions of the first distribution channel forming groove 17 are molded so as to extend obliquely downward from a mid position thereof, so that one of the second distribution channel forming grooves 19 is formed so as to open from a wall surface of one of the intake channels 4 on one side with respect to the compartment wall 15 and the other second distribution channel forming groove 19 is formed so as to open from a wall surface of the other intake channel 4 on the other side with respect to the compartment wall 15.

[0031] Therefore, a gradient is given to each of the exhaust gas distribution channels 13 so that the exhaust gas distribution channels 13 do not run backward at any position thereof from the exhaust gas supply portion 3 to the intake channels 4 to the side of the exhaust gas supply portion 3 with respect to a segment extending along the longitudinal direction of the cartridge 2 at the corresponding position, that is, to the upstream side in the direction of exhaust gas supply.

By the provision of the gradient as described above, water cooled and condensed in the exhaust gas distribution channel 13 can be flowed reliably downward to the opening 21 at the terminal end of the exhaust gas distribution channel 13 and discharged to the intake channels 4.

[0032]

[Second Embodiment]

FIG. 6 is a vertical cross-section of the intake channel 4 according to another embodiment.

In the embodiment disclosed above, a resin plate 18 joined to the upper end surface 16 of the cartridge 2 so as to form the first distribution channel 13a in cooperation with the first distribution channel forming groove 17 is molded integrally with the intake manifold 1.

[0033] The intake channels 4 are formed so as to project from the upper end surface 16 toward the intake manifold 1 so as to get significantly into the inside of the intake manifold 1.

Therefore, by forming the intake channels 4 so as to extend to the inside of the intake manifold 1, the length of the intake channels 4 can be extended, and the inertia supercharging effect when the engine revolution is low can be enhanced.

[0034] An end surface 4a of a cartridge portion surrounding each of the intake channels 4, which opposes the intake manifold 1, is formed into a bell shape so that the diameter of the intake channel 4 is increased as it goes to the inlet port side.

Other configurations are the same as those in the first embodiment.

[0035]

[Third Embodiment]

FIG. 7 is a vertical cross-section of the intake channel 4 according to another embodiment.

In the embodiment disclosed here, the resin plate 18 joined to the upper end surface 16 of the cartridge 2 so as to form the first distribution channel 13a in cooperation with the first distribution channel forming groove 17 is molded integrally with the intake manifold 1 in the same manner as the second embodiment.

[0036] In addition, the cartridge portion surrounding the intake channels 4 is equipped with cylindrical intake channel members 22 on the side of the intake manifold 1 so as to be capable of projecting and retracting, so that the length of the intake channels 4 is expandable and contractible.

An end surface 22a of the intake channel member 22 opposing the intake manifold 1 is formed into a bell shape so that the diameter of the intake channel 4 is increased as it goes to the inlet port side.

[0037] According to the embodiment disclosed here, a configuration which can produce the inertia supercharging effect irrespective whether the engine revolution is high or low is achieved, for example, by controlling the length of the intake channels 4 to be longer when the amount of depression of an accelerator pedal is small and hence the engine revolution is low, and to be shorter when the amount of depression of the accelerator pedal is large and hence the engine revolution is high.

Other configurations are the same as those in the first embodiment.

[0038]

[Fourth Embodiment]

FIG. 8 is a vertical cross-section of the intake channels 4 according to another embodiment.

In the embodiment disclosed here, the resin plate 18 joined to the upper end surface 16 of the cartridge 2 so as to form the first distribution channel 13a in cooperation with the first distribution channel forming groove 17 is molded integrally with the intake manifold 1 in the same manner as the second embodiment.

[0039] In addition, the intake manifold 1 is molded integrally with a shaping member 23 which shapes the inlet ports of the intake channels 4 into a bell shape so that the diameter thereof is increased as it goes to the inlet port side when being connected to the end surface 4a of the cartridge portion surrounding each of the intake channels 4, which opposes the intake manifold 1.

Other configurations are the same as those in the first embodiment.

[0040]

[Other Embodiments]

The intake system of the internal combustion engine according to embodiments disclosed here may have a hole which defines the exhaust gas distribution channel in the interior of the cartridge.

[0041] In the first to fourth embodiments, the cartridge 2 is provided inside the intake manifold 1. In this configuration, the cartridge 2 is assembled to the intake manifold 1 in advance, and the obtained assembly may be assembled to the cylinder head.

Therefore, in comparison with the case where the cartridge 2 is interposed between the intake manifold 1 and the cylinder head, assembly is achieved more easily.

[0042] In the first to fourth embodiments, the blow-by gas is introduced into the blow-by gas introducing portion 7, and the exhaust gas is introduced into the exhaust gas introducing portion 8. However, a configuration in which exhaust gas is introduced into the blow-by gas introducing portion 7 instead of the blow-by gas, and the blow-by gas is introduced into the exhaust gas introducing portion 8 instead of the exhaust gas is also applicable.

Alternatively, a configuration in which two types of gases, namely, the blow-by gas and the exhaust gas, are introduced into the exhaust gas introducing portion 8, and the blow-by gas introducing portion 7 is not provided is also applicable.

Furthermore, gas other than the blow-by gas and the exhaust gas (for example, evaporation gas in a fuel tank) may be introduced as the gas to be introduced into the blow-by gas introducing portion 7 and the exhaust gas introducing portion 8.

INDUSTRIAL APPLICABILITY

[0043] The present invention is applicable to an intake system of an internal combustion engine in which the amount of gas and heat of gas can be introduced uniformly into the respective cylinders and hermeticity of the intake manifold may be impaired less easily.

CLAIMS

Claim 1. An intake system of an internal combustion engine comprising:

an intake manifold;

a cartridge provided in the intake manifold, the cartridge having a plurality of intake channels for supplying air to respective cylinders in the internal combustion engine and valve elements configured to adjust the amounts of intake air taken into the respective cylinders;

a gas supply portion configured to introduce gas discharged from the internal combustion engine into the cylinders, the gas supply portion being provided at a center position of the cartridge in the direction of row of the plurality of intake channels; and

a plurality of gas distribution channels provided on the cartridge and configured to distribute from the gas supply portion to the plurality of intake channels.

Claim 2. The intake system of the internal combustion engine according to Claim 1, wherein the lengths of the plurality of gas distribution channels are all the same from the gas supply portion to the intake channels.

Claim 3. The intake system of the internal combustion engine according to Claim 1 or 2, wherein the opening areas of the plurality of gas distribution channels are all the same.

Claim 4. The intake system of the internal combustion engine according to any one of Claims 1 to 3, wherein openings are formed

on respective wall surfaces of the plurality of intake channels as terminal ends of the gas distribution channels, and

a gradient is given to each of the gas distribution channels so that the gas distribution channels do not run backward at any position thereof from the gas supply portion to the opening to the side of the gas supply portion with respect to a longitudinal direction of the cartridge.

Claim 5. The intake system of the internal combustion engine according to any one of Claims 1 to 4, wherein the cartridge is formed of a resin material having higher heat resistant property than a resin material which constitutes the intake manifold.

FIG.1

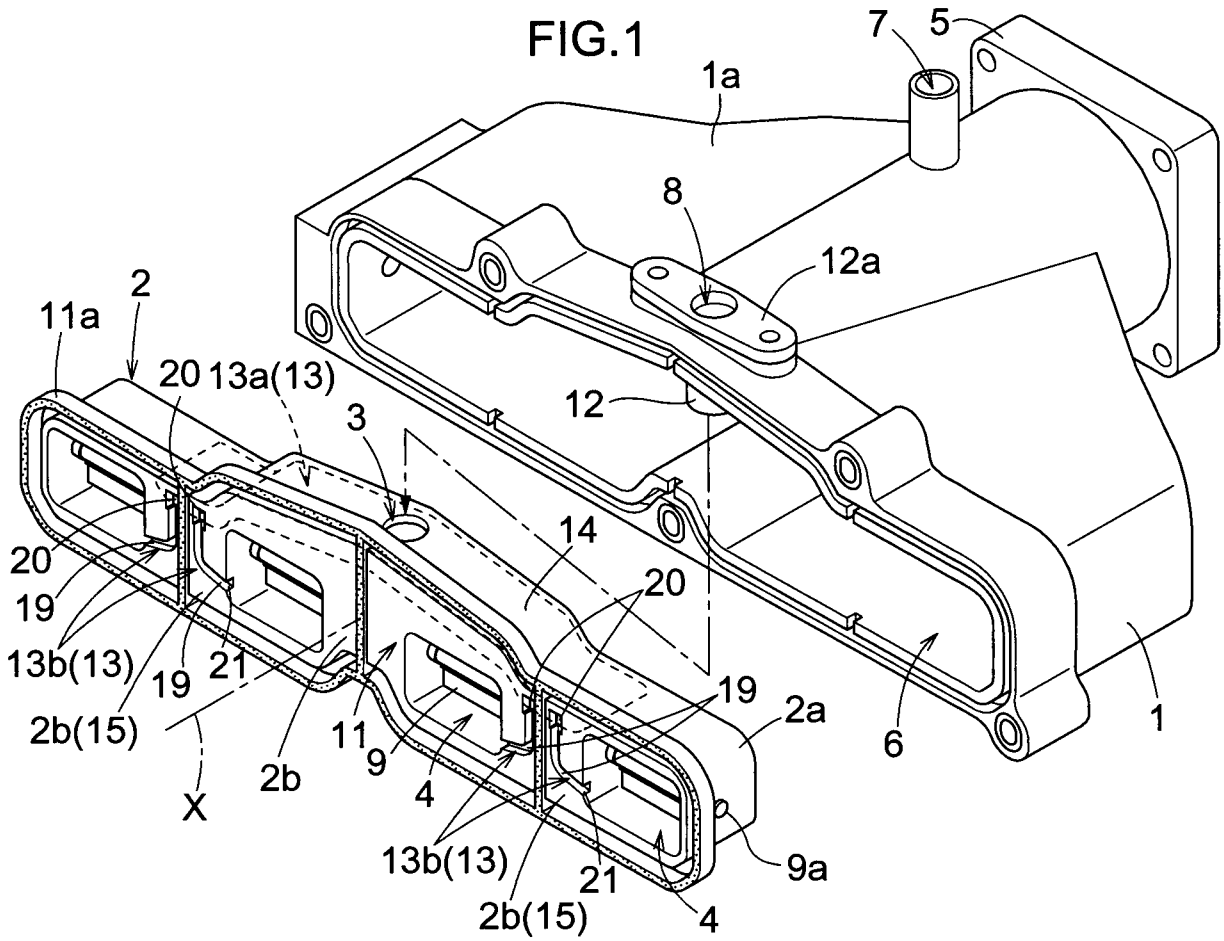
7
5
1a
8
12a
2
11a
20
13a(13)
12
3
14
20
19
13b(13)
19
21
2b(15)
X
2b
11
9
4
19
2a
6
1
13b(13)
21
2b(15)
4
9a

FIG.2

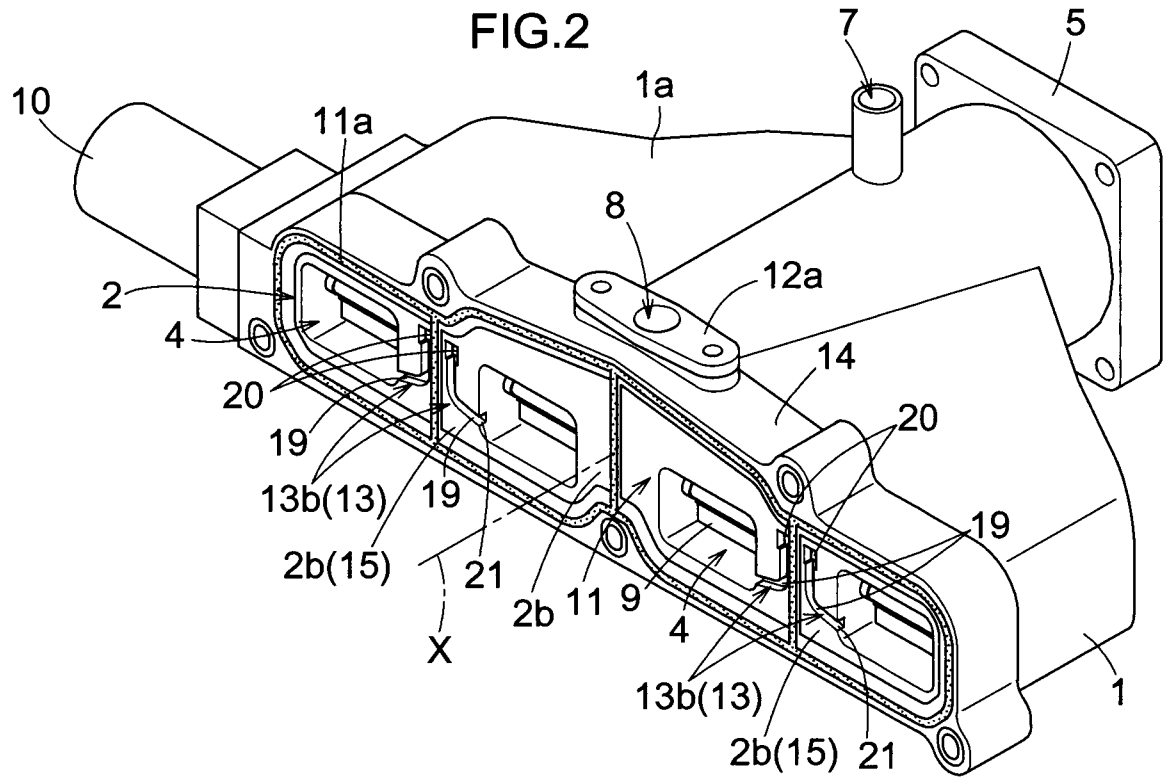
7
5
10
1a
11a
8
12a
2
4
14
20
20
19
19
13b(13)
19
2b(15)
21
2b
11
9
4
X
13b(13)
1
2b(15)
21

FIG.3

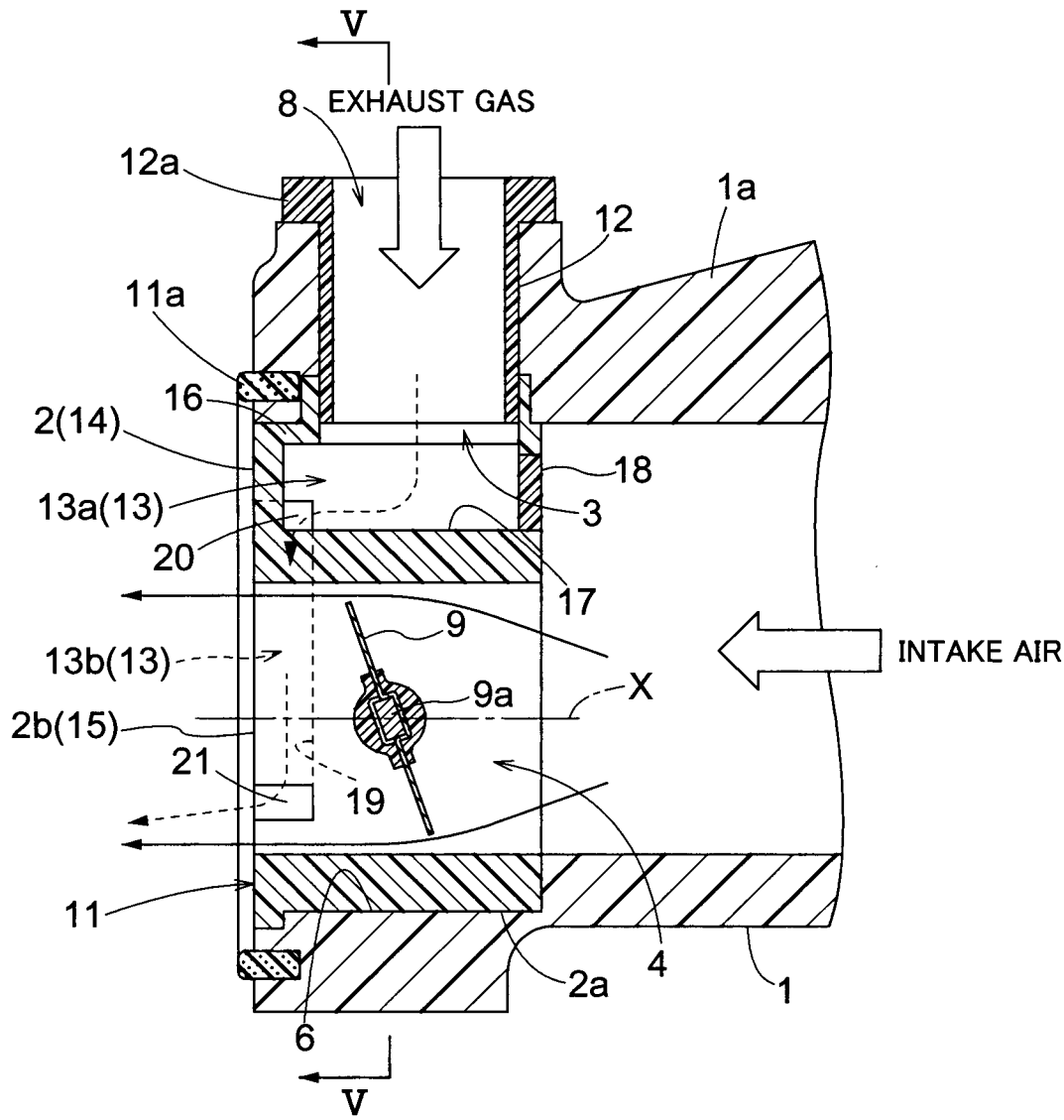
V
8
EXHAUST GAS
12a
12
1a
11a
16
2(14)
18
13a(13)
3
20
17
9
13b(13)
INTAKE AIR
9a
X
2b(15)
21
19
11
2a
4
1
6
V

FIG.4

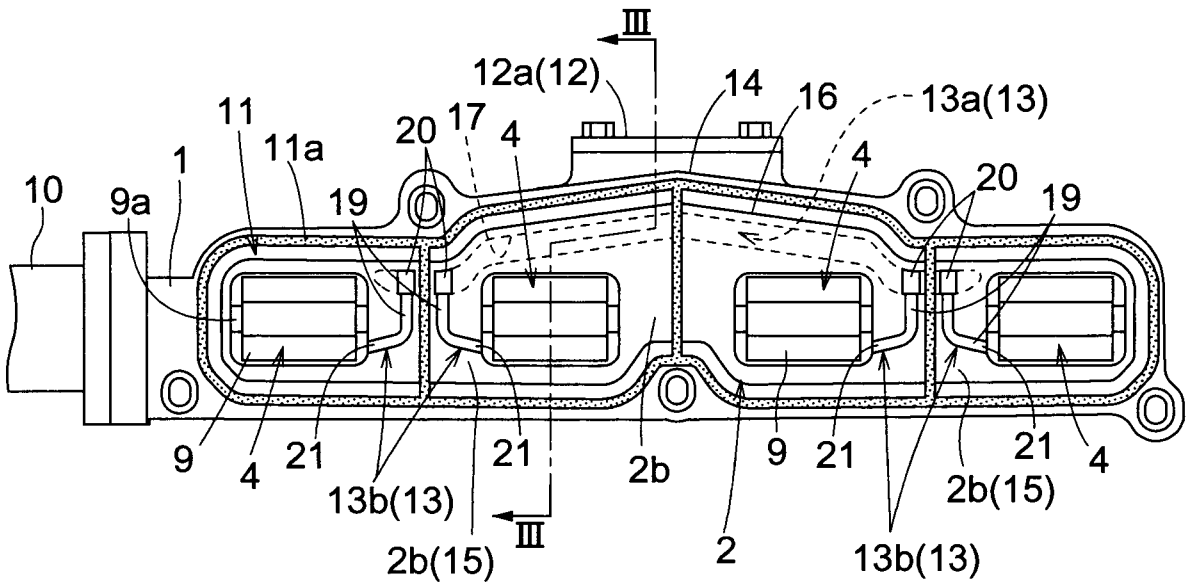
III
12a(12)
14
16
13a(13)
11
11a
20
17
4
1
10
9a
19
20
19
4
9
4
21
13b(13)
21
2b
9
21
21
4
2b(15)
2b(15)
III
2
13b(13)

FIG.5

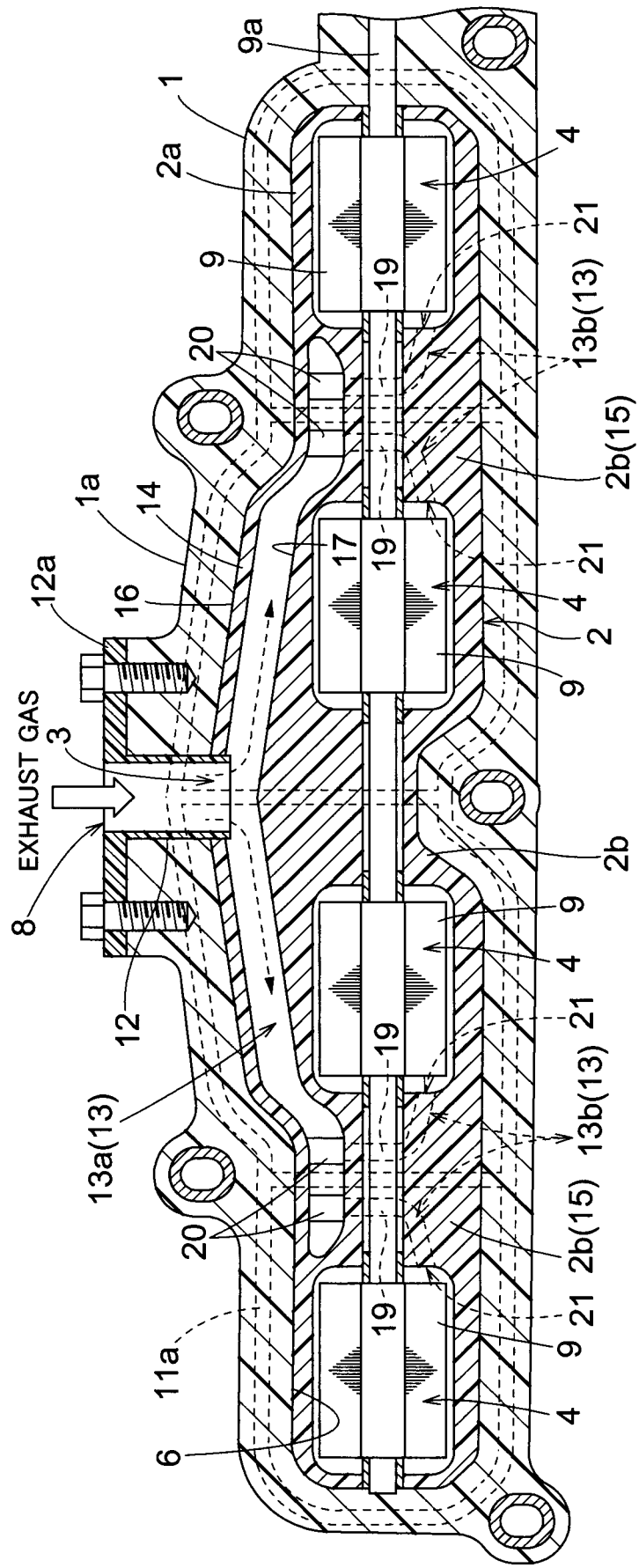
9a
1
2a
9
20
1a
14
12a
16
3
EXHAUST GAS
8
12
13a(13)
20
11a
6
4
21
19
13b(13)
2b(15)
17
2
2b
9
4
21
19
13b(13)
2b(15)
21
9
4
19

FIG.6

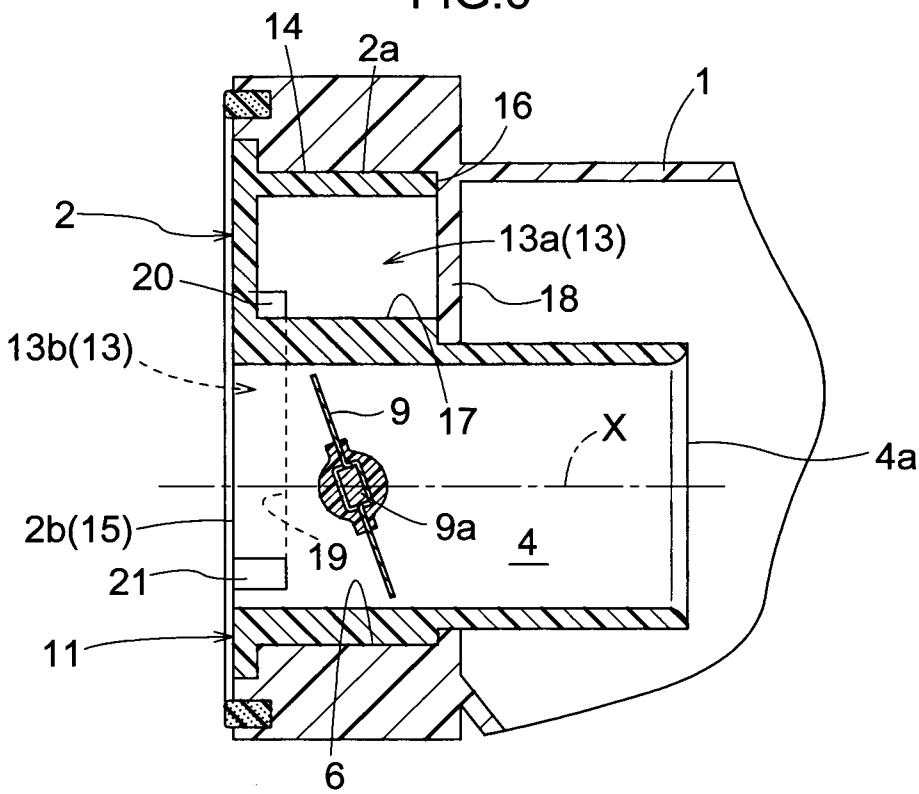
14
2a
16
1
2
13a(13)
20
18
13b(13)
9
17
X
4a
2b(15)
9a
19
4
21
11
6

FIG.7

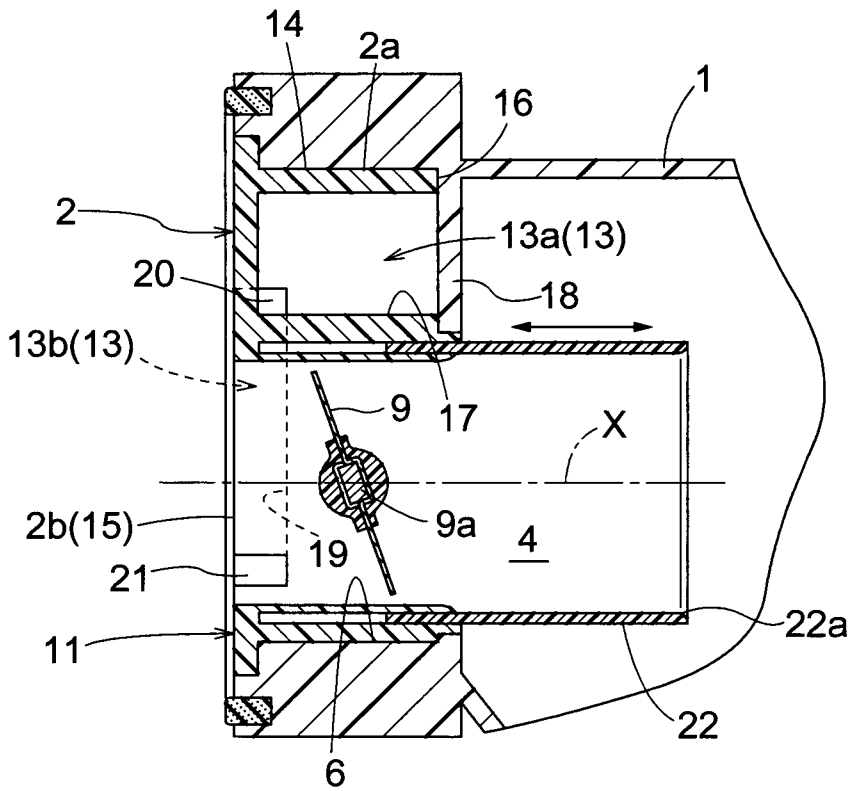
14
2a
16
1
2
13a(13)
20
18
13b(13)
9
17
X
2b(15)
9a
19
4
21
22a
11
22
6

FIG.8

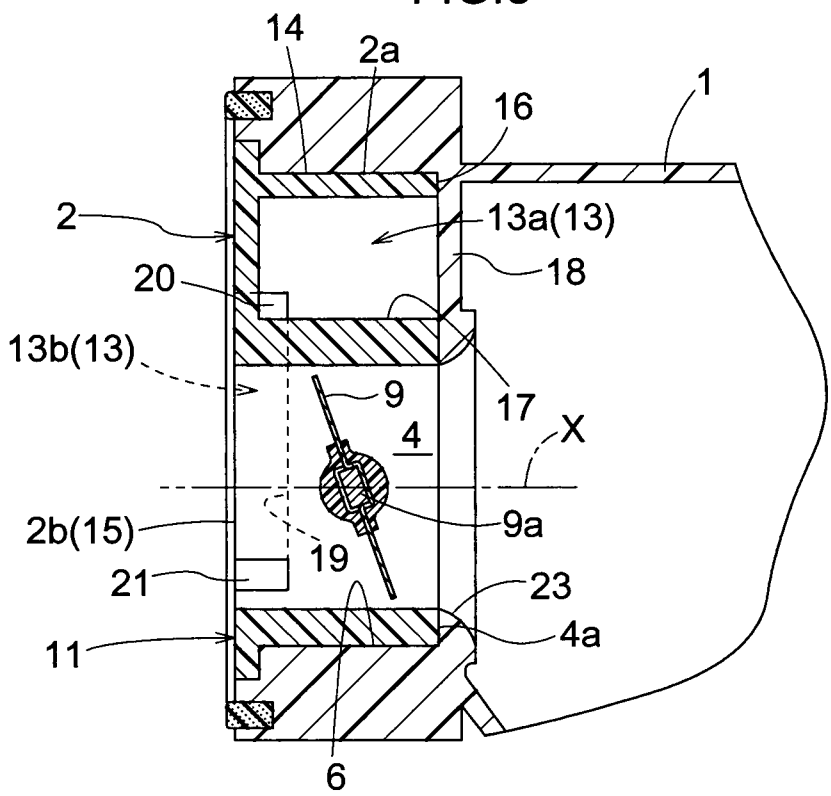

INTERNATIONAL SEARCH REPORT

International application No
PCT/JP2011/072913

A. CLASSIFICATION OF SUBJECT MATTER
INV. F02M25/07 F02M35/10 F02D9/10
ADD.

According to International Patent Classification (IPC) or to both national classification and IPC

B. FIELDS SEARCHED

Minimum documentation searched (classification system followed by classification symbols)
F02B F02D F02M

Documentation searched other than minimum documentation to the extent that such documents are included in the fields searched

Electronic data base consulted during the international search (name of data base and, where practical, search terms used)
EPO-Internal, WPI Data

C. DOCUMENTS CONSIDERED TO BE RELEVANT

Category*	Citation of document, with indication, where appropriate, of the relevant passages	Relevant to claim No.
X	GREBE U D ET AL: "DIE NEUE GENERATION DER MITTLEREN VIERZYLINDER-OTTOMOTOREN VON FIAT-GM POWERTRAIN", MTZ MOTORTECHNISCHE ZEITSCHRIFT, VIEWEG VERLAG, WIESBADEN, DE, vol. 64, no. 11, 1 November 2003 (2003-11-01), pages 898-902,904, XP001186388, ISSN: 0024-8525	1-3
A	figures 12,13 page 8, paragraph 4 - page 9, paragraph 2	4,5
X	DE 199 09 433 C1 (DAIMLERCHRYSLER AG) 13 April 2000 (2000-04-13)	1-4
Y	abstract; figures column 1, line 41 - line 60 column 2, line 37 - column 3, line 49	5
	-/--	

[X] Further documents are listed in the continuation of Box C.

[X] See patent family annex.

* Special categories of cited documents :

"A" document defining the general state of the art which is not considered to be of particular relevance

"E" earlier document but published on or after the international filing date

"L" document which may throw doubts on priority claim(s) or which is cited to establish the publication date of another citation or other special reason (as specified)

"O" document referring to an oral disclosure, use, exhibition or other means

"P" document published prior to the international filing date but later than the priority date claimed

"T" later document published after the international filing date or priority date and not in conflict with the application but cited to understand the principle or theory underlying the invention

"X" document of particular relevance; the claimed invention cannot be considered novel or cannot be considered to involve an inventive step when the document is taken alone

"Y" document of particular relevance; the claimed invention cannot be considered to involve an inventive step when the document is combined with one or more other such documents, such combination being obvious to a person skilled in the art.

"&" document member of the same patent family

Date of the actual completion of the international search	Date of mailing of the international search report
2 January 2012	09/01/2012

Name and mailing address of the ISA/	Authorized officer
European Patent Office, P.B. 5818 Patentlaan 2 NL - 2280 HV Rijswijk Tel. (+31-70) 340-2040, Fax: (+31-70) 340-3016	Döring, Marcus

1

Form PCT/ISA/210 (second sheet) (April 2005)

INTERNATIONAL SEARCH REPORT

International application No
PCT/JP2011/072913

C(Continuation). DOCUMENTS CONSIDERED TO BE RELEVANT

Category*	Citation of document, with indication, where appropriate, of the relevant passages	Relevant to claim No.
Y	DE 197 57 986 A1 (FILTERWERK MANN & HUMMEL GMBH) 1 July 1999 (1999-07-01)	5
A	abstract; figures 1,2 column 1, line 46 - last line column 3, line 7 - line 26 column 4, line 34 - column 5, line 32	1-4

X	US 4 867 109 A (TEZUKA ETSUHIRO ET AL) 19 September 1989 (1989-09-19)	1-4
A	abstract; figures column 2, line 7 - line 63	5

X	US 2009/293831 A1 (HARADA KENICHI) 3 December 2009 (2009-12-03)	1-4
A	abstract; figures page 3, paragraph 49 - page 5, paragraph 78	5

A	US 4 693 226 A (CHOMA MICHAEL A) 15 September 1987 (1987-09-15) abstract; figures column 2, line 54 - column 3, line 59	1-5

A	JP 2005 307960 A (HYUNDAI MOTOR CO LTD) 4 November 2005 (2005-11-04) cited in the application abstract; figures	1-5
A	& US 2005/235972 A1 (YI JEA WOONG) 27 October 2005 (2005-10-27) abstract; figures page 2, paragraph 20 - paragraph 24	1-5

1

INTERNATIONAL SEARCH REPORT

Information on patent family members

International application No
PCT/JP2011/072913

Patent document cited in search report	Publication date	Patent family member(s)	Publication date
DE 19909433 C1	13-04-2000	NONE	
DE 19757986 A1	01-07-1999	DE 19757986 A1	01-07-1999
		TW 396244 B	01-07-2000
		WO 9934110 A1	08-07-1999
US 4867109 A	19-09-1989	NONE	
US 2009293831 A1	03-12-2009	DE 102009026482 A1	24-12-2009
		JP 2009287418 A	10-12-2009
		US 2009293831 A1	03-12-2009
US 4693226 A	15-09-1987	DE 3714495 A1	03-12-1987
		GB 2191244 A	09-12-1987
		JP 62294757 A	22-12-1987
		US 4693226 A	15-09-1987
JP 2005307960 A	04-11-2005	DE 102004063267 A1	17-11-2005
		JP 4564333 B2	20-10-2010
		JP 2005307960 A	04-11-2005
		KR 20050101895 A	25-10-2005
		US 2005235972 A1	27-10-2005