US00D560245S

(12) **United States Design Patent** (10) **Patent No.: US D560,245 S**
Nakamura (45) **Date of Patent: ** Jan. 22, 2008**

(54) **CAMERA**

(75) Inventor: **Takatoshi Nakamura**, Shinagawa-ku (JP)

(73) Assignee: **Sony Computer Entertainment Inc.**, Tokyo (JP)

(**) Term: **14 Years**

(21) Appl. No.: **29/263,546**

(22) Filed: **Jul. 26, 2006**

(30) **Foreign Application Priority Data**

Jan. 31, 2006 (JP) D2006-002053

(51) **LOC (8) Cl.** **16-01**
(52) **U.S. Cl.** **D16/218**
(58) **Field of Classification Search** D16/200–206, D16/208, 212, 213, 218; 348/373–376; 358/909.1; 396/535–541
See application file for complete search history.

(56) **References Cited**

U.S. PATENT DOCUMENTS

4,281,343	A *	7/1981	Monteiro	348/373
6,124,892	A *	9/2000	Nakano	348/373
D449,628	S *	10/2001	Obata et al.	D16/202
D487,104	S *	2/2004	Obata	D16/202
D506,215	S	6/2005	Lin et al.	
D523,457	S *	6/2006	Tan	D16/202
D528,576	S	9/2006	Chung et al.	
D530,732	S *	10/2006	Tanaka et al.	D16/202
D535,676	S *	1/2007	Dayan	D16/218
D536,719	S *	2/2007	Lukic et al.	D16/202

FOREIGN PATENT DOCUMENTS

JP	D1070961 S	5/2000
TW	430391	4/2001
TW	471903	1/2002
TW	586844	5/2004

OTHER PUBLICATIONS

Taiwan IPO Search Report dated May 8, 2007.

* cited by examiner

Primary Examiner—Adir Aronovich
(74) *Attorney, Agent, or Firm*—Rader, Fishman & Grauer PLLC

(57) **CLAIM**

The ornamental design for a camera, as shown.

DESCRIPTION

FIG. **1** is a perspective view of a camera showing my new design;

FIG. **2** is a front elevational perspective view thereof;

FIG. **3** is a rear elevational view thereof;

FIG. **4** is a left elevational view thereof;

FIG. **5** is a right elevational view thereof;

FIG. **6** is a top plan view thereof; and,

FIG. **7** is a bottom plan view thereof.

1 Claim, 7 Drawing Sheets

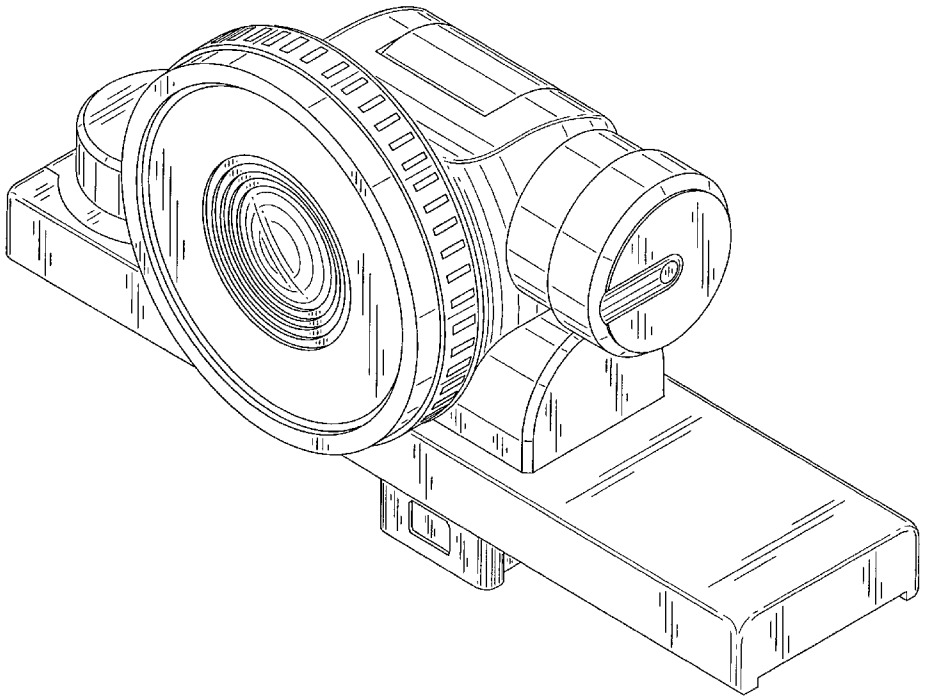

Fig.1

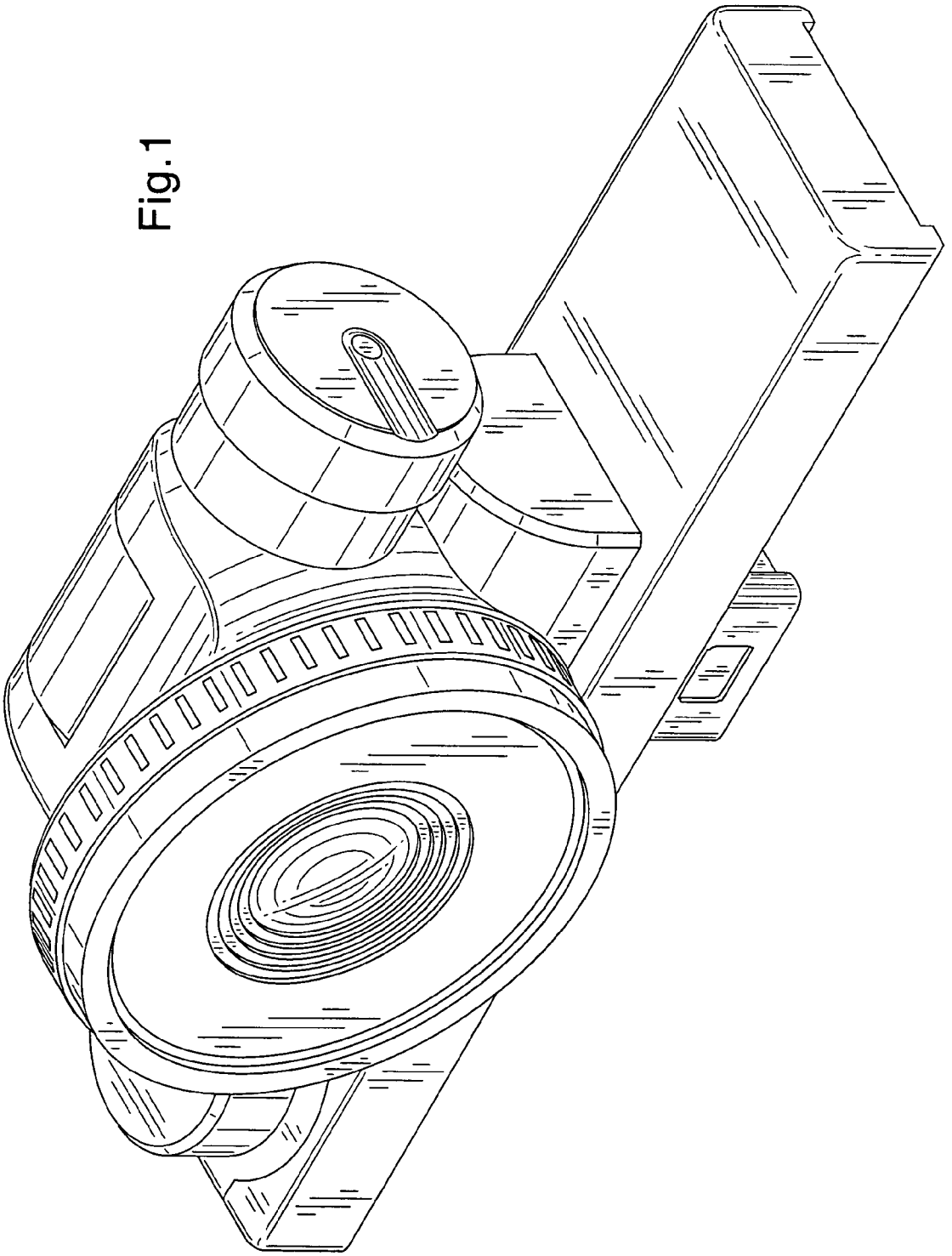

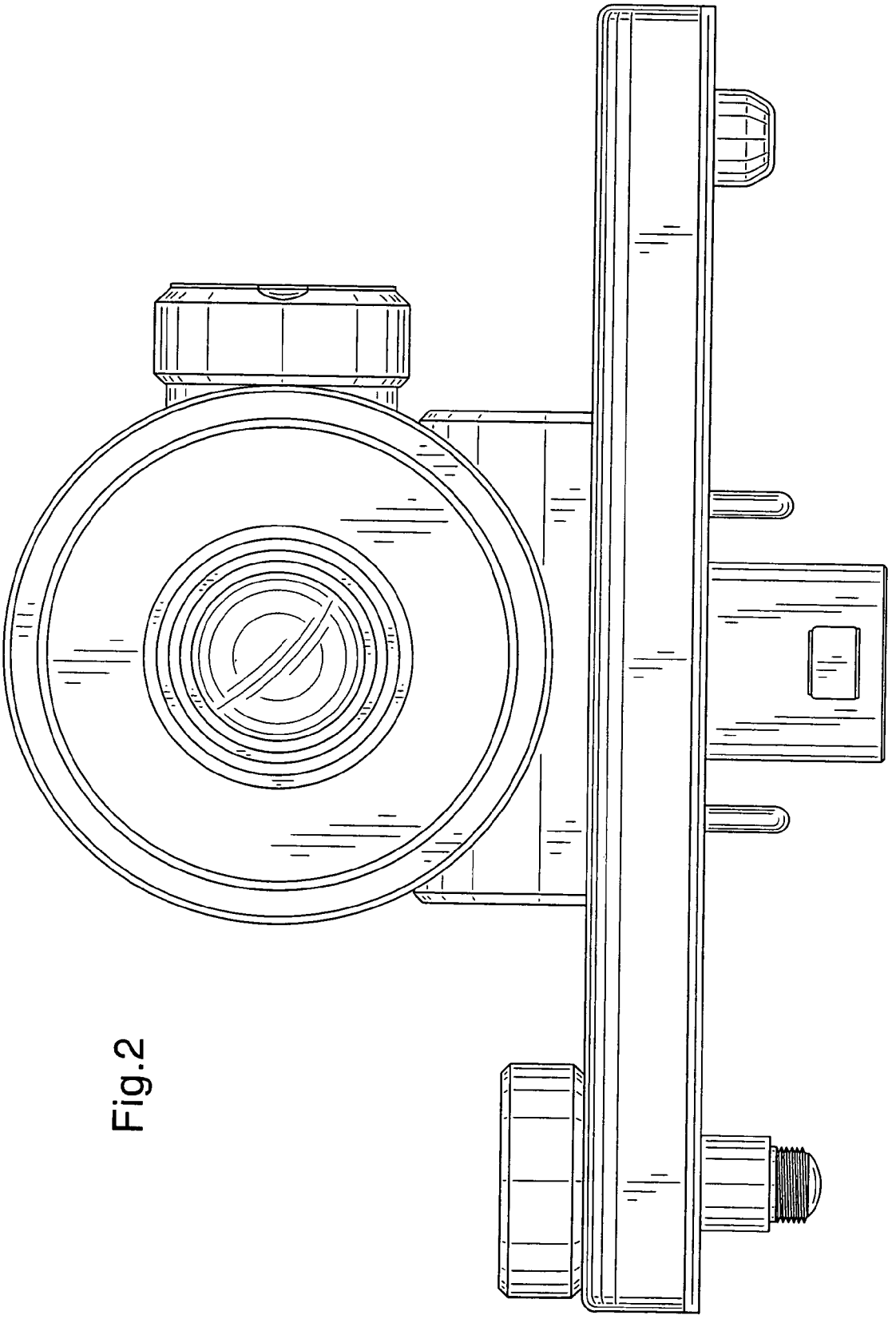

Fig.2

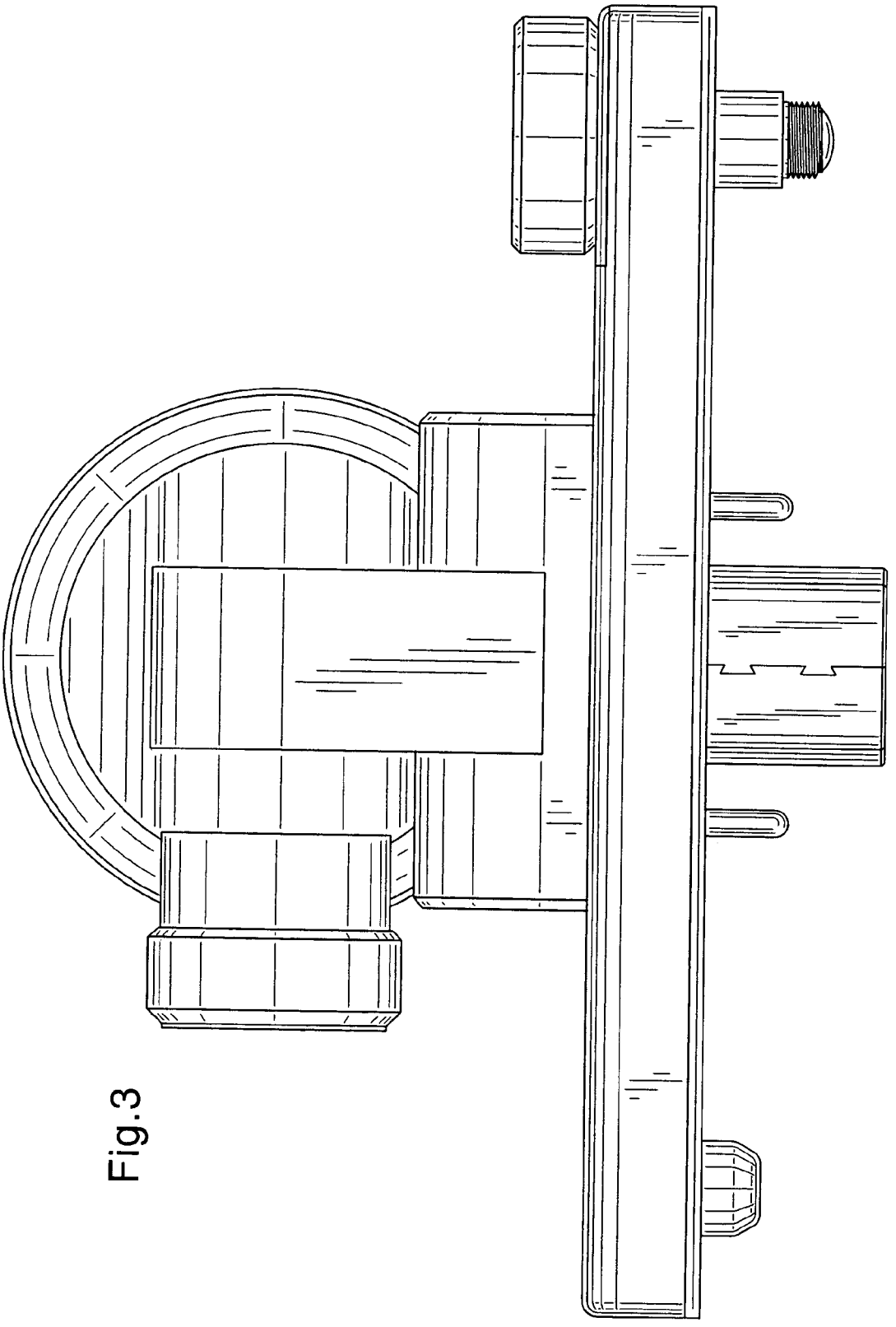

Fig.3

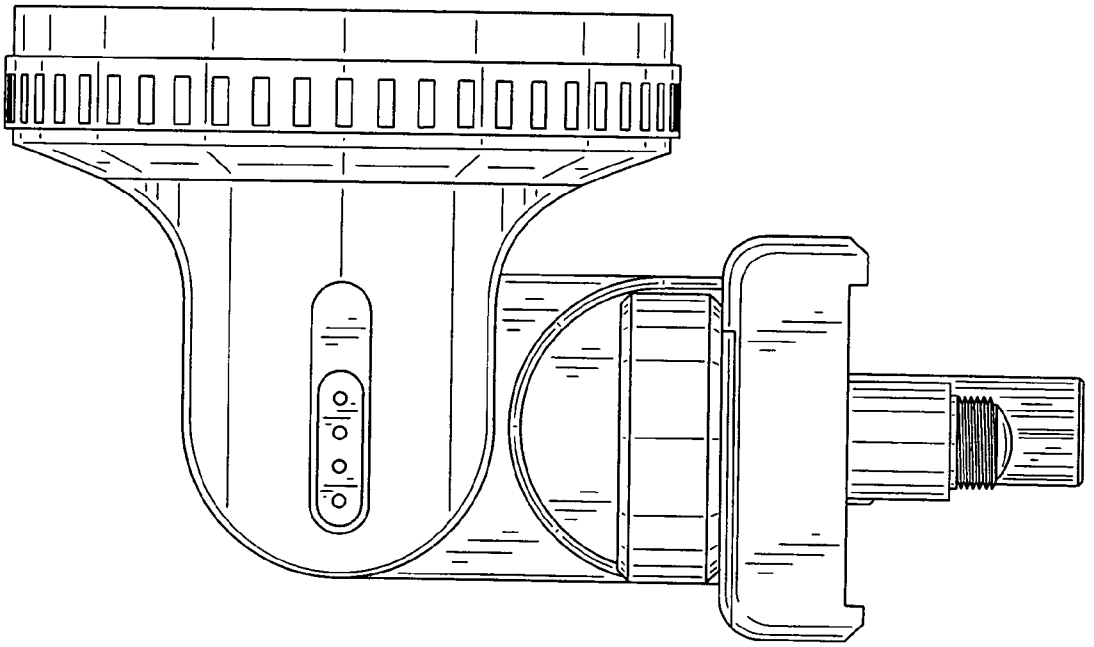

Fig.4

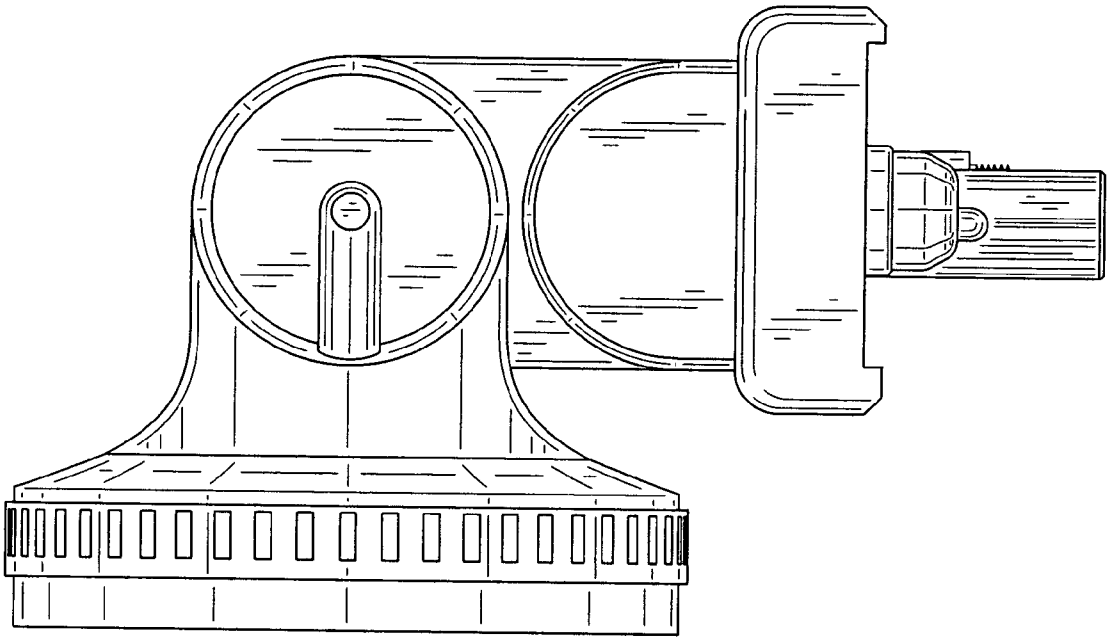

Fig.5

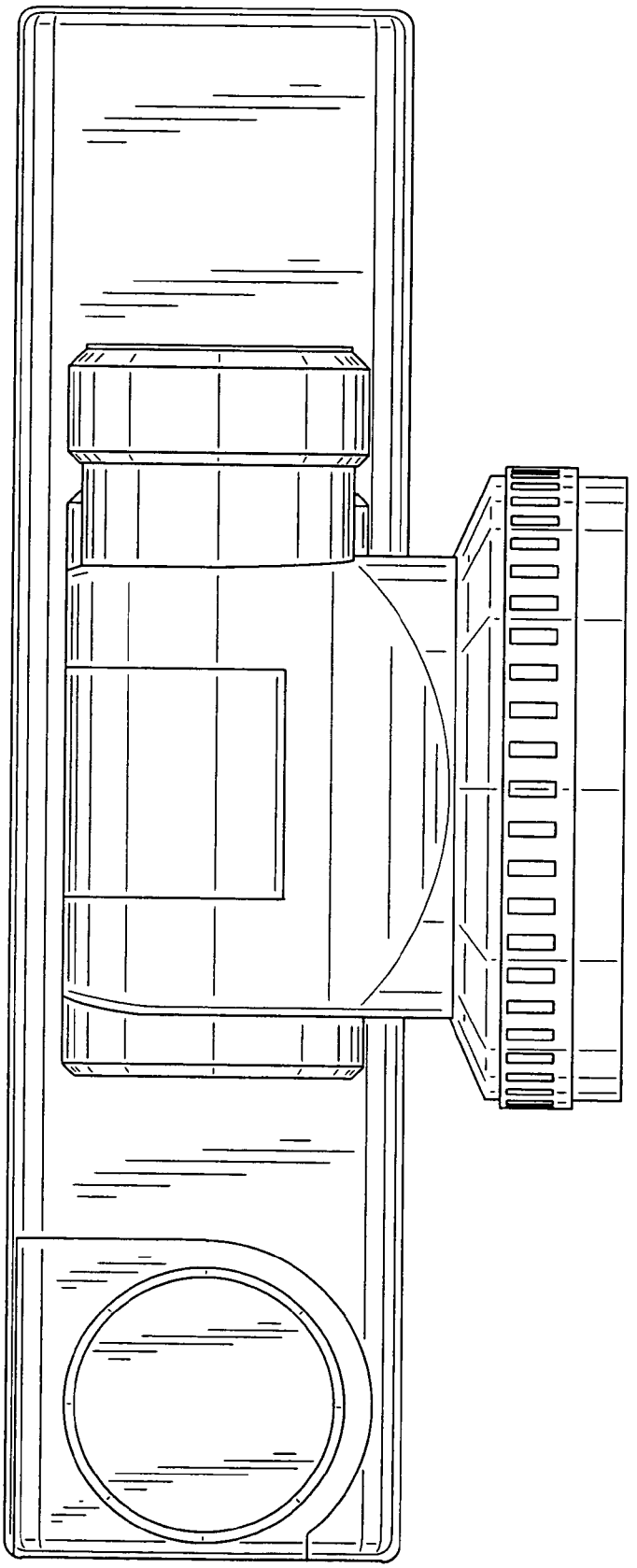

Fig.6

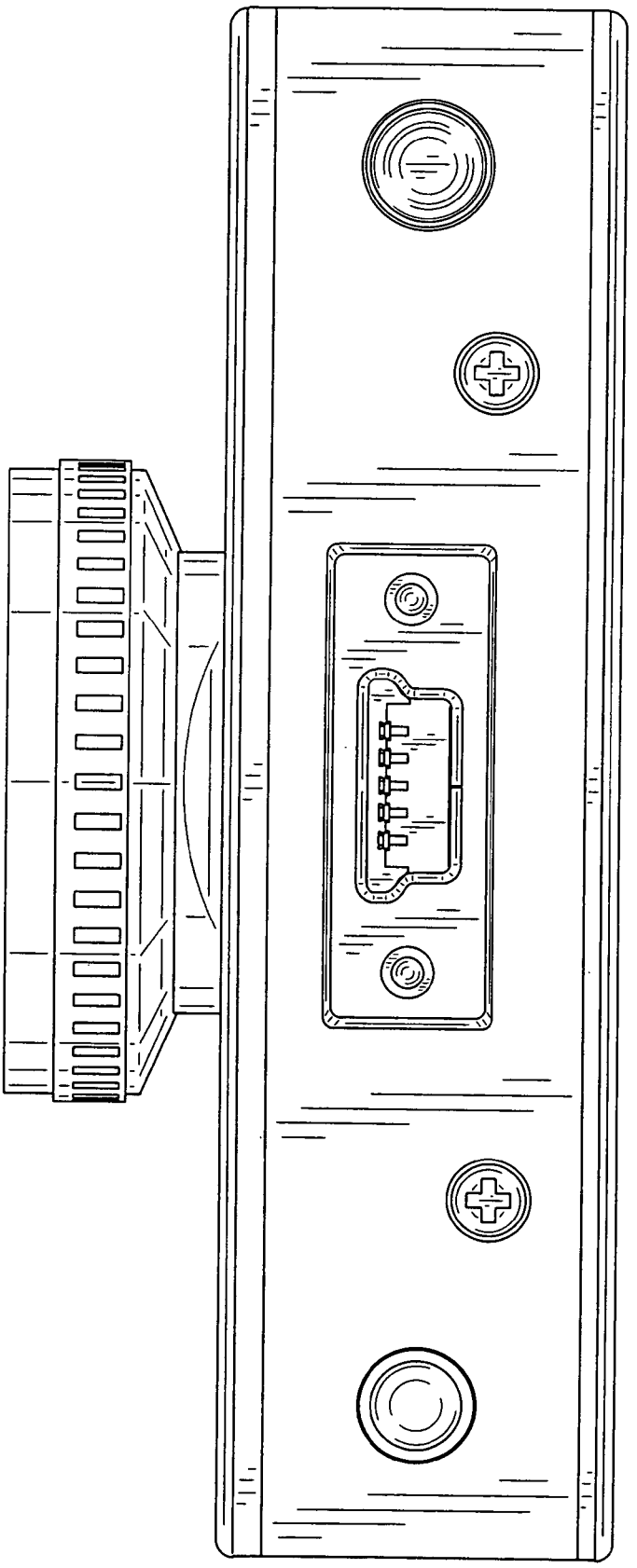

Fig.7