March 24. 1970 F. C. HOLTZ, JR 3,502,463

NICKEL BASE ALLOYS AND PROCESS FOR THEIR MANUFACTURE

Filed Jan. 3, 1966 2 Sheets-Sheet 1

Fig. 1

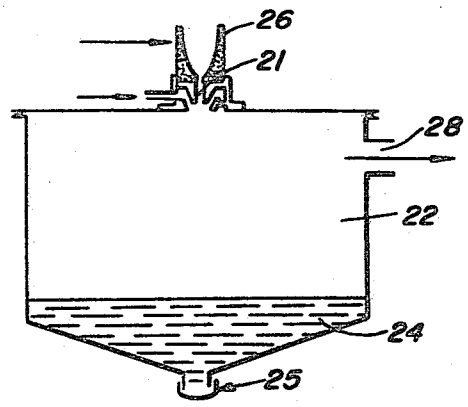

Fig. 2

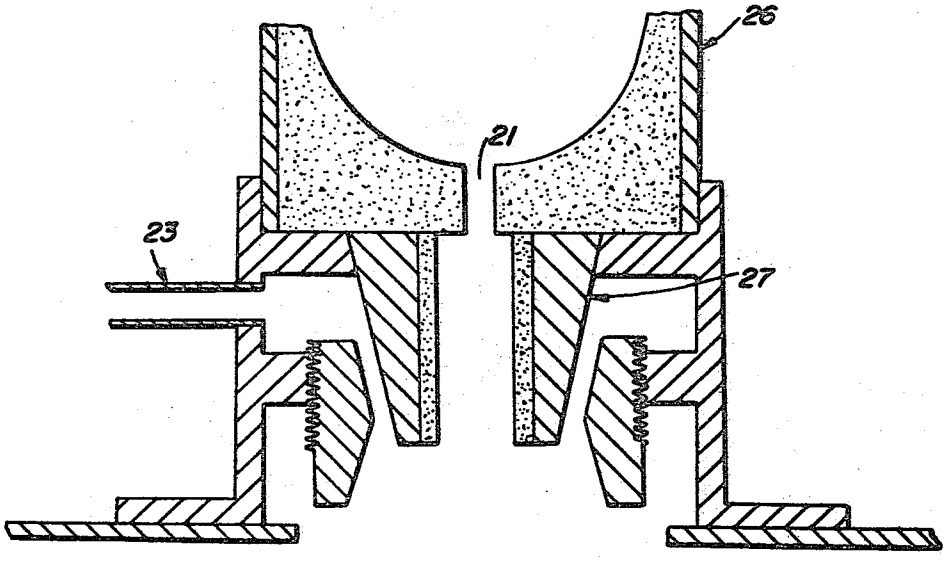

INVENTOR.
FREDERICK C. HOLTZ, JR.
BY Albert Siegel
Atty.

March 24, 1970 F. C. HOLTZ, JR 3,502,463

NICKEL BASE ALLOYS AND PROCESS FOR THEIR MANUFACTURE

Filed Jan. 3, 1966 2 Sheets-Sheet 2

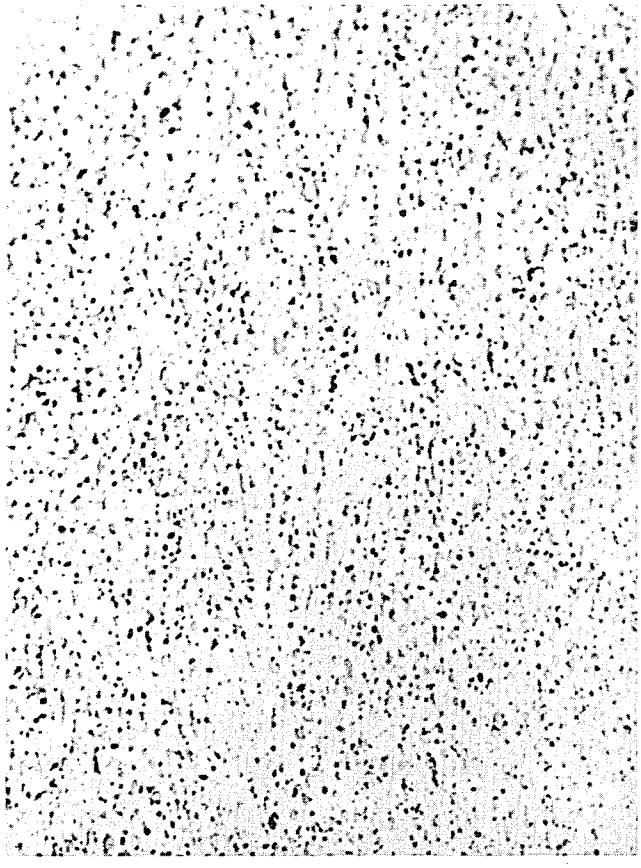

FIG. 3

INVENTOR

FREDERICK C. HOLTZ, JR.

United States Patent Office

3,502,463
Patented Mar. 24, 1970

3,502,463

NICKEL BASE ALLOYS AND PROCESS FOR THEIR MANUFACTURE

Frederick C. Holtz, Jr., Evanston, Ill., assignor to IIT Research Institute, Chicago, Ill., a not-for-profit corporation of Illinois

Continuation-in-part of application Ser. No. 435,733, Feb. 26, 1965. This application Jan. 3, 1966, Ser. No. 518,145

Int. Cl. C22c *19/00*; B22f *7/06*; B22d *23/08*

U.S. Cl. 75—171 4 Claims

ABSTRACT OF THE DISCLOSURE

Nickel base alloys having a relatively large quantity of carbide phase exhibit improved metallurgical and physical properties. Novel alloys disclosed have a composition by weight consisting essentially of from 10 to 20 percent tungsten, from 8 to 12 percent cobalt, from 8 to 20 percent chromium, from 2 to 4 percent titanium, from 1.5 to 3 percent aluminum, from 1 to 3 percent carbon, balance nickel with incidental impurities.

This patent application is a continuation-in-part of application Ser. No. 435,733 filed Feb. 26, 1965 by the same inventor.

The present invention relates to a novel group of nickel base alloys which are characterized by excellent strength properties and which contain a relatively high amount of carbon when compared with presently known nickel base alloys. The invention also relates to an atomization and powder consolidation process for fabricating these alloys. Such alloys have especial utility as structural materials.

The present alloys have the following composition:

	Percent by weight
Tungsten	10–20
Cobalt	8–12
Chromium	8–20
Titanium	2–4
Aluminum	1.5–3
Carbon	1–3

Balance nickel with incidental impurities.

As is well known to those skilled in this particular art, presently available nickel base alloys and especially highly alloyed nickel base alloys normally contain about 0.1% carbon and accordingly have a relatively small quantity of carbide phase. By greatly increasing the carbon content along with an increase in the amount of carbide forming materials, I have been able to provide high strength nickel base alloys which need not be aged to bring out their excellent strength features. Even without aging and by mere cold working following powder consolidation the present alloys illustrate excellent strength features. Part of this stems from the considerable increase in carbide volume contained therein.

I have discovered that both the metallurgical and physical properties of the present nickel base alloys with the concurrent increase in the carbide content thereof may be readily achieved by practicing the atomization and metal powder consolidation process which is hereinafter described. By this process I have found that large quantities of carbides may be retained as an ultra fine precipitate uniformly distributed throughout the nickel alloy matrix. The carbide phase is of a grain size ranging from 0.5 to 3 microns. It should be understood that in some cases a very small amount of such carbides may be slightly larger than 3 microns and so long as the number of these slightly larger carbides is quite small, e.g., less than 5% of total carbide, the detrimental effect is minimal.

Furthermore, as is well known to those skilled in this art present commercial nickel base alloys (commonly referred to as "superalloys" in the trade) are used primarily for high temperature structural purposes. These alloys have good oxidation resistance and retain fairly good strength values up to temperatures of 1800° F. or even in some cases up to 2000° F. Basically such commercial nickel base alloys are of two types, namely cast alloys which have relatively low ductility and accordingly are used in their as-cast shape, and wrought alloys which although of somewhat lower strength, are more ductile and can be forged and rolled into for example, bar, plate or sheet stock. The present alloys in distinction to such major types of commercial alloys are considerably stronger than the cast alloys but at the same time are readily fabricable into useful wrought forms. The increased strength of my alloys is evidenced by the table set out below and beacuse of the high alloy content and their unique micro structure this strength advantage persists at temperatures encompassing the entire range over which nickel base superalloys are used.

The advantages of the present alloys and their excellent strength retention at elevated temperatures lies in the presence of a large volume of thermally stable carbide phase and especially as shown in the attached photomicrographs of a fine carbide phase uniformly distributed throughout the major alloy matrix. The presently available nickel base alloys containing the low amount of carbon referred to above rely upon solid solution strengthening by such elements as chromium, tungsten, molybdenum and cobalt together with additional strengthening produced by precipitates of compounds resulting from the minor additions of titanium and aluminum. The latter compounds are finely dispersed and are relatively stable up to about 1800° or 1900° F. but at above these temperatures the nickel-titanium-aluminum compounds dissolve and lose their effectiveness as dispersion strengtheners. On the other hand in the present alloys the carbides remain stable at temperatures approaching 2200° F. and since the alloys of my invention contain large quantities of carbon and as a result of the interactions with the carbide forming elements therein large volumes of carbide phase result. The hard carbide constituent maintains its efficiency as a strengthener at temperatures which cause a significant loss of strength in the present commercial products. Strengthening by the carbide phase apparently is due to not only its ultra fine size and uniform distribution but the fact that these factors restrict grain growth of the nickel alloy matrix and provide barriers to the movement of "slip" planes within the grains.

Accordingly, a primary object of my invention is to provide a new group of nickel base structural alloys of relatively high carbide content which are characterized by a uniformly dispersde carbide phase of ultra fine particle size, i.e., predominantly less than 3 microns.

A more specific object of my invention is to provide a new group of nickel base alloys characterized as aforesaid which consist of 10 to 20% tungsten, 8 to 12% cobalt, 8 to 20% chromium, 2 to 4% titanium, 1.5 to 3% aluminum, 1 to 3% carbon, with incidental impurities.

Another object of my invention is to provide a new group of wrought nickel base alloys for structural use.

A further object of my invention is to provide a method of preparing such nickel base alloys which includes the steps of atomizing, rapidly quenching and consolidating such nickel base materials.

These and other objects, features and advantages of my invention will become apparent to those skilled in this particular art from the following detailed disclosure thereof and the accompanying drawings in which:

FIGURE 1 schematically illustrates an atomizing chamber for use in the practice of the present invention;

FIGURE 2 schematically illustrates atomizing apparatus for use herewith; and

FIGURE 3 is a photomicrograph at a magnification of 2000 of a consolidated alloy made as herein taught.

In preparing the present alloys I start with an atomization process. The apparatus for this is schematically illustrated in FIGURES 1 and 2, although it will be understood that other similar apparatus may be likewise employed. An appropriate alloy charge of the desired composition was first weighed up, melted in a suitable crucible and then the molten alloy was poured through the orifice **21** at the top of the atomizing chamber **22**. In such chamber the molten metal stream is first broken up into fine particles and quickly quenched by the high pressure inert gas stream entering the chamber **22** through the gas inlet port **23**. In order to assure rapid quenching of the molten, atomized metal powders I provide at the bottom of the apparatus a water reservoir **24** which may operate in conjunction with the atomizing stream to quench the particles.

The atomizing chamber which is illustrated is fabricated of a steel shell, water-cooled and is approximately 3 feet in diameter and approximately 2 feet in height. Obviously other dimensions may be employed without departing from the spirit or scope of my invention. The bottom of the chamber is slightly conical and in the center thereof I provide a capped opening **25** for metal powder and water removal.

Approximately 5 pounds of the present alloy compositions were heated to approximately 200° to 300° F. above fusion temperature in an argon atmosphere to protect the melt. Argon atomising gas at 350 p.s.i. was fed into the chamber **22** through the inlet port **23** first to purge and then to atomize the molten metal. After purging the melt was poured into the tundish **26** from whence it flowed into the chamber **22** through the opening **21**.

Beyond the opening **21** I provide a refractory lined cone **27** at the exit end of which the atomizing gas strikes the molten metal stream to break up such stream into fine particles. In addition this impact quenches the molten particles so that they are solidified even before they are finally cooled in the water reservoir. Quenching is therefore quite rapid.

I also provide an exhaust port **28** for argon exit.

Some of the alloy compositions which were so atomized (and subsequently treated as hereinafter described) are listed in Table I.

TABLE I.—ALLOY COMPOSITIONS

[Weight percent]

Alloy No.	W	Co	Cr	Ti	Al	C
40	12.5	10	10	3	1.5	1.25
41	15	10	15	3	1.5	2
43	14.4	9.6	16.6	3	1.4	2.5

Balance nickel, with incidental impurities.

After atomization the alloy powders were withdrawn from the atomizing chamber and dried. Approximately 75 to 85% of the resulting atomized powders were finer than 80 mesh and from 15 to 30% were finer than 325 mesh.

In some cases it may be desirable to treat the atomized powders in a hydrogen atmosphere at 1500° to 1600° F. for a few minutes prior to consolidation to reduce any oxide film contained thereon but this is an optional step in my process.

The atomized alloy powders were next consolidated into solid stock. To accomplish this, although certainly many other means of consolidation may be employed, the powders were first canned in Inconel cylinders that were lined with molybdenum foil to permit easy stripping of the canning material from the hot worked ingot. After the bottom of the cylinder was welded on the alloy

powders were poured into the Inconel cans and pressed at pressures ranging from 5 to 30 tons per square inch. I found that the higher pressures did not produce significant increases in powder density for most alloys apparently because of the spheroidal shape and the extreme hardness of the powder particles. Accordingly a major portion of the compositions were pressed at from 5 to 15 t.s.i. Following such step the top lid of the cylinder was inserted and welded into place. I note parenthetically that a brief study indicated that evacuation of the canned, high strength structural nickel powders did not produce a significant improvement in the wrought product so subsequently all cans were sealed without evacuation.

The welded cans were heated to forging temperatures in air and soaked approximately for 10 minutes prior to upset hammer forging on a 250 pound capacity forge unit. Forging was used to produce pancake ingots approximately ½ inch thick. After forging the canned billets where hot rolled to approximately 0.22 to 0.24 inch using a 10% reduction per pass, this representing a total reduction in thickness of 90 to 92% of the original billet thickness. The canning material was then removed and the rolled plates stock sectioned for metallurgical examination and physical property evaluations.

Table II presents some room temperature transverse rupture data of the alloy compositions listed in Table I:

TABLE II.—ROOM-TEMPERATURE TRANSVERSE-RUPTURE STRENGTH

Alloy No.	Transverse-rupture strength, p.s.i.	
	As hot-rolled	Aged 100 hrs., 1,350° F.
40	432,000	450,000
41	424,000	402,000
43	375,000	353,000

It is seen from the foregoing table that rupture strength values in excess of 425,000 p.s.i. are readily obtainable in the present alloys without the necessity of cold working. And from the foregoing rupture strength values one may readily estimate tensile strengths of alloys A40 and A41 in the hot rolled condition well in excess of 200,000 p.s.i. In fact Alloy A40 had an ultimate tensile strength of 210,000 in the hot rolled condition, 238,000 p.s.i. after warm rolling and a u.t.s. of 258,000 after cold rolling.

It will be understood that various modifications and variations may be effected without departing from the spirit or scope of the novel concepts of my invention.

I claim as my invention:

1. An alloy consisting essentially of from 10 to 20% tungsten; from 8 to 12% cobalt; from 8 to 20% chromium; from 2 to 4% titanium; from 1.5 to 3% aluminum; from 1 to 3% carbon, balance nickel with incidental impurities.

2. The alloy as defined in claim **1** characterized by a substantially uniformly dispersed carbide phase in the major phase matrix and by a carbide phase grain size of predominantly less than 3 microns.

3. The alloy as defined in claim **2** wherein there is from 12 to 15% tungsten, about 10% cobalt, from 10 to 17% chromium, about 3% titanium, about 1.5% aluminum, from 1.25 to 2.5% carbon, balance nickel with incidental impurities.

4. The method of making an alloy composition characterized by a substantially uniformly dispersed carbide phase in the major phase matrix, said carbide phase having a particle size predominantly less than 3 microns, which comprises the steps of: atomizing a molten alloy charge consisting essentially of from 10 to 20% tungsten; from 8 to 12% cobalt; from 8 to 20% chromium; from 2 to 4% titanium; from 1.5 to 3% aluminum; from 1 to 3% carbon, balance nickel with incidental impurities; rapidly

quenching said atomized material and consolidating said material into metal stock.

References Cited

UNITED STATES PATENTS

3,244,506 4/1966 Reen ..... 75—0.5

L. DEWAYNE RUTLEDGE, Primary Examiner
W. W. STALLARD, Assistant Examiner
U.S. Cl. X.R.
29—182.7; 75—.5, 203