(No Model.)

J. M. HAWLEY.

SPOKE AND TIRE TIGHTENER.

No. 525,981. Patented Sept. 11, 1894.

Fig. 1.

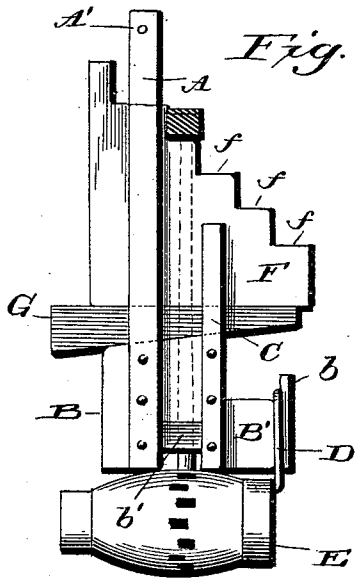

Fig. 2.

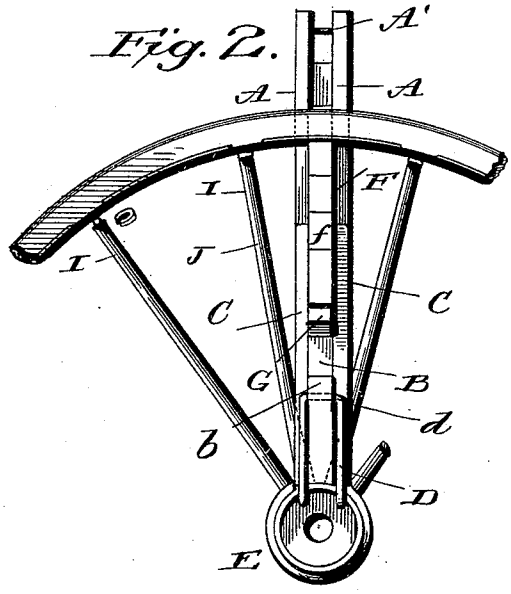

Fig. 3.

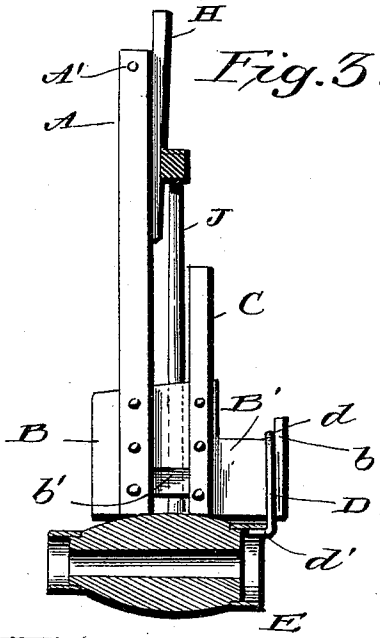

Fig. 4.

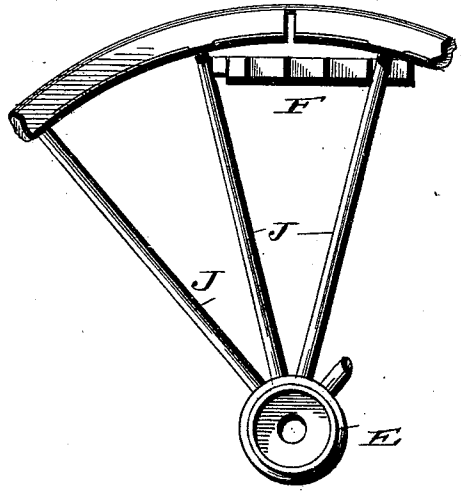

Witnesses:

L. C. Hills

E. A. Bond

Inventor:

James M. Hawley.

By William Walker

Atty.

THE NORRIS PETERS CO., PHOTO-LITHO., WASHINGTON, D. C.

UNITED STATES PATENT OFFICE.

JAMES M. HAWLEY, OF ODIN, ILLINOIS.

SPOKE AND TIRE TIGHTENER.

SPECIFICATION forming part of Letters Patent No. 525,981, dated September 11, 1894.

Application filed April 23, 1894. Serial No. 508,676. (No model.)

To all whom it may concern:

Be it known that I, JAMES M. HAWLEY, a citizen of the United States, residing at Odin, in the county of Marion and State of Illinois, have invented certain new and useful Improvements in Spoke and Tire Tighteners; and I do declare the following to be a full, clear, and exact description of the invention, such as will enable others skilled in the art to which it appertains to make and use the same, reference being had to the accompanying drawings, and to the letters of reference marked thereon, which form a part of this specification.

This invention relates to certain new and useful improvements in devices for tightening the tire and spokes of a wheel, and it has for its object among others to provide a simple and cheap contrivance composed of few parts and those readily assembled or separated when desired, easily applied in position, not requiring skilled labor to operate and not liable to be broken in use.

Other objects and advantages of the invention will hereinafter appear and the novel features thereof will be specifically defined by the appended claims.

The invention in the present instance resides in the peculiar combinations, and the construction, arrangement and adaptation of parts, all as more fully hereinafter described, shown in the drawings and then particularly pointed out in the claims.

The invention is clearly illustrated in the accompanying drawings, which, with the letters of reference marked thereon, form a part of this specification, and in which—

Figure 1 is a side elevation of my improvement in position for tightening the felly and spokes. Fig. 2 is an edge view of the same. Fig. 3 is a view in side elevation with the hub and felly in section and the offset portion of the device removed, showing the application of the device for adjusting the dish of a wheel. Fig. 4 shows the application of a part of the device for use in spreading the adjacent ends of two parts of the felly for the insertion of a wedge.

Like letters of reference indicate like parts throughout the several views.

Referring now to the details of the drawings by letter, A designates two parallel pieces of suitable material and length held at the proper distance apart and between these pieces A near their lower ends is the plate B which may be secured thereto and therebetween in any suitable manner. This piece is further secured between the shorter pieces C and projects beyond both sets of pieces as seen best in Fig. 1, its upper face being tapered or inclined from a horizontal and the portion projecting at one end is cut off at its upper side to bring its upper face on a lower plane than that of the inclined face and this portion of less height is formed with an upwardly-extending lug *b* extending a short distance above the upper face of said portion B′ as seen in Figs. 1 and 3 and over this lug and portion is designed to be engaged the loop or bight *d* of the wire retainer D the legs of which are designed to straddle and embrace the lateral portion B′ while the ends of the legs are turned inward horizontally as seen at *d′* in Fig. 3 to engage within and beneath the upper portion of the metal band E of the hub E′ to hold the device down upon the hub. The plate B, between the pieces A and C is beveled as seen at *b′* to allow it to enter between two spokes in proximity to the hub. The pieces A and C extend for a considerable distance above the beveled upper face of the plate B and between these pieces is removably fitted the step-piece F the lower face of which is horizontal while upon its upper side it is provided with the offsets, steps or shoulders *f* as shown most clearly in Fig. 1.

G is a removable wedge-piece designed for use for some purposes, while H is a thinner wedge designed for use for other purposes as will soon be made clear. The upper ends of the pieces A should by preference be held against separation in some suitable manner, as by the rod or pin A′, as seen in Figs. 1, 2 and 3.

With the parts constructed and arranged substantially as above set forth the operation of the device in some of its uses is as follows: As seen in Fig. 1, the device is placed upon the hub and the retainer D placed in position over the lateral portion of the plate B and its ends engaged under the band of the hub. The wedge G is placed in position upon the inclined face of the plate B and the step-piece F is placed upon the wedge and moved

to the right or left as may be necessary to bring the proper step or offset or shoulder against the inner face of the felly of the wheel. The wedge is then driven endwise until the felly is forced outward and raised a sufficient distance from the shoulder at the outer end of the spoke or spokes upon opposite sides of the plate B. This tightens the tire and then upon each spoke around the tenon thereof is placed a washer I, after which the wedge is withdrawn and the washers preventing the return of the parts to their former position the spokes and tire must of necessity be tightened. The device is adapted to wheels of different diameters, the step-piece being moved to the right or left in accordance with the diameter of the wheel.

In Fig. 3 I have shown how the device is applied to adjust the dish of a wheel. For this purpose the step-piece is removed and the pieces A and C with the plate B placed in position as shown. Then the wedge H, or the wedge G if necessary is inserted between the spoke J and the pieces A, bearing against the edge of the felly and the wedge is driven in until the required amount of dish is taken out; then insert wedges, preferably metal, between the tenon of the spoke and the mortise in the hub; then remove the wedge and change the device so that the pieces A come on the opposite side of the wheel and repeat the operation until all the required dish has been taken out of the wheel. In old wheels where the dish is the wrong way it may be readily taken out by placing the device upon the proper side of the wheel and proceeding as above set forth.

Fig. 4 shows the application of the step-piece and wedge for separating the adjacent ends of two pieces of the felly for the insertion of a wedge.

It is thought that the advantages of the device hereinbefore set forth will be readily appreciated by those familiar with this class of devices and that its operation will be readily understood, especially when taken in connection with the annexed drawings. When not used for the purposes above designated it may be used as a lifting jack.

Modifications in detail may be resorted to without departing from the spirit of the invention or sacrificing any of its advantages.

What is claimed as new is—

1. The combination with the parallel pieces, of the plate held between them with a lateral projection, the wire retainer with inturned ends, the removable step-piece fitted loosely between the said pieces, and a removable wedge, all substantially as and for the purpose specified.

2. The combination with the long and short parallel pieces, of the plate held therebetween with beveled upper face and a lateral extension, having upwardly-extending lug, the removable retainer adapted to engage the band of a wheel-hub, the step-piece loosely and removably fitted between the two sets of parallel pieces, and the removable wedges, all substantially as shown and described.

In testimony whereof I affix my signature in presence of two witnesses.

JAMES M. HAWLEY.

Witnesses:
EMMA PUSIUS,
D. K. HAWLEY.