No. 674,564. Patented May 21, 1901.

R. MAGNUSON.

TRACK GAGE.

(Application filed Nov. 3, 1900.)

(No Model.)

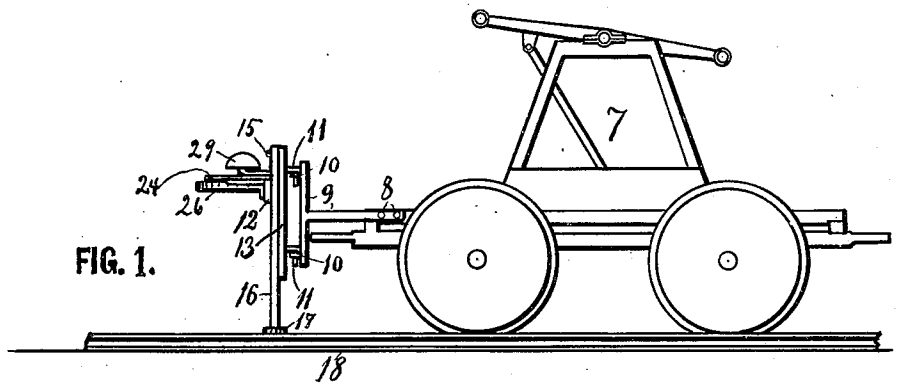

FIG. 1.

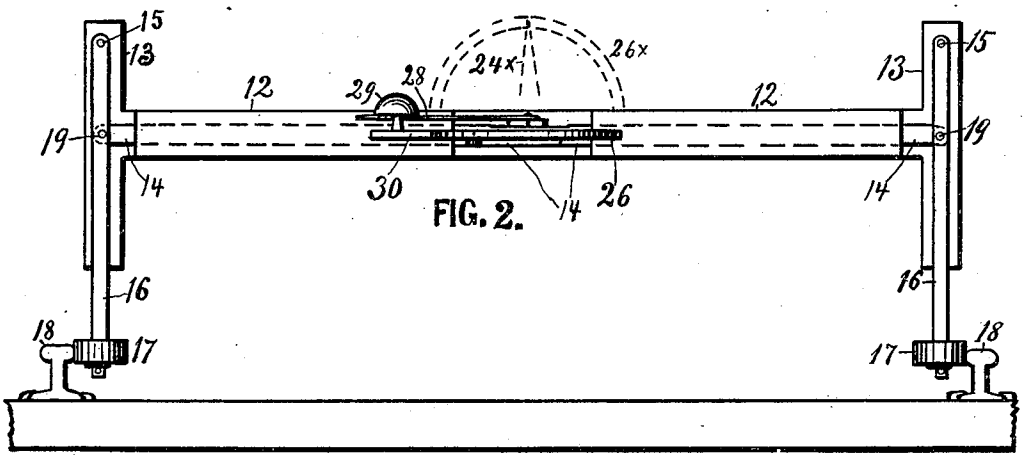

FIG. 2.

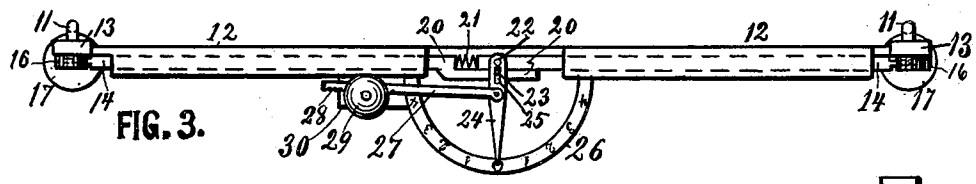

FIG. 3.

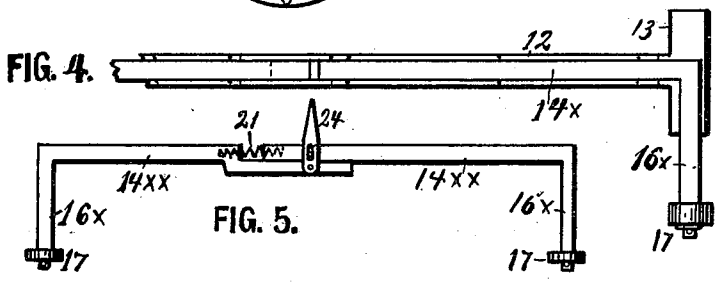

FIG. 4.

FIG. 5.

WITNESSES:

D. E. Carlsen.

E. C. Carlsen

INVENTOR.

Richard Magnuson

BY his ATTORNEY.

A. M. Carlsen

THE NORRIS PETERS CO., PHOTO-LITHO., WASHINGTON, D. C.

UNITED STATES PATENT OFFICE.

RICHARD MAGNUSON, OF ST. PAUL, MINNESOTA.

TRACK-GAGE.

SPECIFICATION forming part of Letters Patent No. 674,564, dated May 21, 1901.

Application filed November 3, 1900. Serial No. 35,415. (No model.)

To all whom it may concern:

Be it known that I, RICHARD MAGNUSON, a citizen of the United States, residing at St. Paul, in the county of Ramsey and State of Minnesota, have invented certain new and useful Improvements in Track-Gages; and I do declare the following to be a full, clear, and exact description of the invention, such as will enable others skilled in the art to which it appertains to make and use the same, reference being had to the accompanying drawings, and to the figures of reference marked thereon, which form a part of this specification.

My invention relates to improvements in track-gages of the class used by roadmasters traveling on a hand-car to examine the condition of the track in regard to spreading or closing of the rails from the effect of the weather or other causes; and the objects of my invention will be fully understood from the below description and will especially be pointed out in the claims.

In the accompanying drawings, Figure 1 is a side view of a hand-car with my improved track-gage mounted on it in position for use. Fig. 2 is a front elevation of the gage as looking toward the left-hand end of Fig. 1. Fig. 3 is a top view of the gage in Fig. 2. Fig. 4 is a front view of a portion of the gage in a modified form of the outer ends of the gage-bars. The front side of the bar-carrying frame or tube 12 is removed to expose the gage-bar $14^{\times}$. Fig. 5 is a further modification of the adjacent ends of the gage-bars by which the indicator-finger 24 is operated.

Referring to the drawings by reference-numerals, 7 is the hand-car, upon which are secured at 8 the two brackets 9, each of which is provided with two staples 10, in which I drop the vertically-elongated hooks 11 of the gage-bar frame or house 12 13, of which the part 12 forms a guide and house for the gage-bars to slide in, while the T-shaped portions 13, when hitched to the T-shaped brackets, give steadiness to the gage.

In my preferred construction I pivot at 15 the two arms or levers 16 to the heads 13 and provide the lower ends of the arms with rollers 17, adapted to roll along the inner sides or edges of each rail 18. The gage-bars 14 slide in the guiding portion 12 of the frame, are connected pivotally to the arms or levers at 19, and overlap each other with their inner ends 20, and between the ends of one and the shoulder formed by the offset in the other is interposed and held by suitable cavities for its ends the spring 21, which tends at all times to force the rollers 17 against the rails.

In the overlapping ends of the gage-bars are secured the pins 22 and 23, of which the former engages pivotally a hole in the end of the indicator-finger 24, while the other is pivotally placed in the slot 25 in said indicator-finger, so that when the rails are spread or closed away from their normal position the rollers 17 will cause the gage-bars to slide on each other and throw the indicator 24 to the various numbers marked upon the sector or segment 26, and thus indicate whether the rails are closed or spread, to what extent they are displaced, and whether immediate repair is necessary or not.

In order that no variation in the indicator may escape attention, I connect to the indicator-finger 24 a rod 27, which in any suitable manner operates so as to ring the bell 29, secured on the extension 30 of the segment. The rod may operate the bell-hammer directly by teeth like 28 or by vibrating a lever, as on the common bicycle-bells.

Among the many modifications which may be made without diverging from the spirit of my invention may be mentioned the making of the gage-bars and the roller-carrying arms in one rigid piece, like $14^{\times}$ and $16^{\times}$ in Fig. 4, and the vertical position of the segment and indicator, as shown in dotted lines $26^{\times}$ and $24^{\times}$ in Fig 2, which simply requires the overlapping ends of the gage-bars to overlap above and below each other, as on the bars $14^{\times\times}$ in Fig. 5.

Having thus described my invention, what I claim, and desire to secure by Letters Patent of the United States, is—

1. In a track-gage adapted to be secured to and carried by a hand-car, the combination with an extensible gage-bar of rollers carried at both ends thereof adapted to roll along the inner edges of the rails, a spring holding the rollers at all times against the rails, an indicator operated by the two adjacent ends of the gage-bar; said indicator consisting of a graduated segment and a pointing-finger mov-

ing upon the same and being pivotally connected to both sections of the gage-bar.

2. A track-gage comprising in combination a suitable frame adapted to be secured to a hand-car, arms suspended therefrom and carrying rollers constantly spring-pressed against the inner sides of the rails, a gage-bar slidingly mounted in the frame and consisting of two partly-overlapping sections, each connected with one of the roller-carrying arms, an indicating finger or pointer pivotally secured to both of the overlapping ends of the gage-bars, so as to be operated by either or both of them in either of two opposite directions from its normal position, and a graduated segment for the needle or pointer to move upon to either side from a central point forming the normal position of the needle.

3. In a track-gage of the class described, the combination with the gage-frame 12 having the vertically-elongated heads 13 provided with the hooks 11 of the brackets 9 having the staples 10 for receiving said hooks, said brackets having vertically-elongated heads corresponding to the heads of the gage-frame, substantially as and for the purpose set forth.

In testimony whereof I affix my signature in presence of two witnesses.

RICHARD MAGNUSON.

Witnesses:
A. M. CARLSEN,
HAROLD HARRIS.