Innovation, Sciences et Développement économique Canada
Office de la Propriété Intellectuelle du Canada

Innovation, Science and Economic Development Canada
Canadian Intellectual Property Office

CA 2911675 C 2018/09/18

(11)(21) **2 911 675**

(12) **BREVET CANADIEN**
CANADIAN PATENT

(13) **C**

(22) Date de dépôt/Filing Date: 2008/02/07
(41) Mise à la disp. pub./Open to Public Insp.: 2008/08/21
(45) Date de délivrance/Issue Date: 2018/09/18
(62) Demande originale/Original Application: 2 829 909
(30) Priorité/Priority: 2007/02/14 (US60/901,513)

(51) Cl.Int./Int.Cl. *A61G 5/10* (2006.01), *A61G 5/04* (2013.01), *A61G 5/06* (2006.01)

(72) Inventeurs/Inventors:
BEKOSCKE, ROBERT, US;
JURKIEWICZ, DAMON, US;
FOUGHT, GERALD, US

(73) Propriétaire/Owner:
INVACARE CORPORATION, US

(74) Agent: OSLER, HOSKIN & HARCOURT LLP

(54) Titre : SYSTEME DE COMMANDE DE STABILITE
(54) Title: STABILITY CONTROL SYSTEM

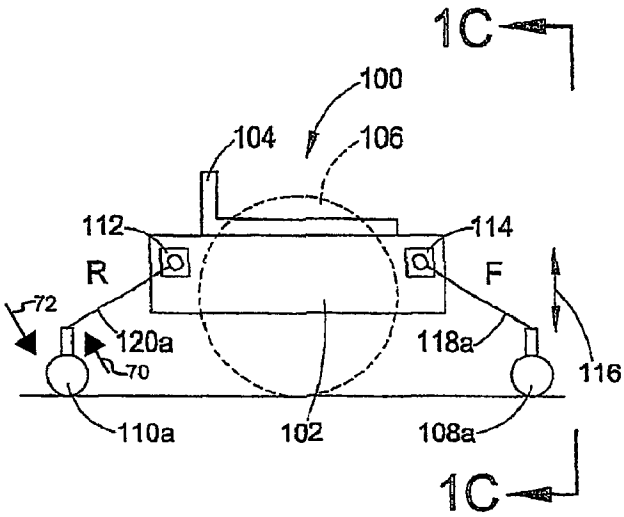

(57) Abrégé/Abstract:
Embodiments of a suspension for a vehicle is provided. The suspension includes, for example, a frame and a locking assembly. The locking assembly inhibits tipping of a frame of the vehicle when tipping of the frame is detected.

Abstract

Embodiments of a suspension for a vehicle is provided. The suspension includes, for example, a frame and a locking assembly. The locking assembly inhibits tipping of a frame of the vehicle when tipping of the frame is detected.

STABILITY CONTROL SYSTEM

BACKGROUND

[0002] Wheelchairs and scooters are an important means of transportation for a significant portion of society. Whether manual or powered, these vehicles provide an important degree of independence for those they assist. However, this degree of independence can be limited if the wheelchair is required to traverse obstacles such as, for example, curbs that are commonly present at sidewalks, driveways, and other paved surface interfaces. This degree of independence can also be limited if the vehicle is required to ascend inclines or descend declines.

[0003] Most wheelchairs have front and rear casters to stabilize the chair from tipping forward or backward and to ensure that the drive wheels are always in contact with the ground. The caster wheels are typically much smaller than the driving wheels and located both forward and rearward of the drive wheels. Though this configuration provides the wheelchair with greater stability, it can hamper the wheelchair's ability to climb over obstacles such as, for example, curbs or the like, because the size of the front casters limits the height of the obstacle that can be traversed.

[0004] Though equipped with front and rear suspended casters, most mid-wheel drive wheelchairs exhibit various degrees of tipping forward or rearward when descending declines or ascending inclines. This is because the suspensions suspending the front or rear stabilizing casters are compromised so that they are not made too rigid, which would prevent tipping and also not provide much suspension, or are made too flexible thereby effectively not providing any degree of suspension or stabilization.

SUMMARY

[0005] According to one embodiment, a suspension for a vehicle is provided. The suspension includes, for example, a stabilizing assembly. The stabilizing assembly inhibits tipping of a frame of the vehicle when tipping of the frame is detected.

BRIEF DESCRIPTION OF THE DRAWINGS

[0006] In the accompanying drawings which are incorporated in and constitute a part of the specification, embodiments of tip or stability control systems, sub-assemblies, and components are illustrated, which together with a general description given above and the detailed description given below, serve to explain the principles of tip or stability control systems, sub-assemblies and components.

[0007] Figure 1A is an illustration of a rear of an embodiment of a mid-wheel drive wheelchair;

[0008] Figure 1B is a view taken along lines 1B-1B in Figure 1A, illustrating a side of the mid-wheel drive wheelchair;

[0009] Figure 1C is a view taken along lines 1C-1C in Figure 1B, illustrating a front of the mid-wheel drive wheelchair;

[0010] Figure 2 is a flow chart that illustrates an embodiment of a method of controlling tipping of a mid-wheel drive wheelchair frame;

[0011] Figures 3A-3C illustrate the wheelchair of Figures 1A-1C, where one rear caster has moved downward relative to a frame;

[0012] Figures 4A-4C illustrate the wheelchair of Figures 1A-1C, where the wheelchair is exhibiting a tipping behavior;

[0013] Figure 5 is an illustration of an embodiment of a wheelchair with a fluid cylinder stabilizing assembly;

[0014] Figure 6 is an illustration of an embodiment of a wheelchair with a fluid cylinder with spring return stabilizing assembly;

[0015] Figures 7A-7C illustrate an embodiment of a mid-wheel drive wheelchair that is similar to the wheelchair shown in Figures 1A-1C where two stabilizing members are linked;

[0016] Figures 8A-8C illustrate an embodiment of a mid-wheel drive wheelchair that is similar to the wheelchair shown in Figures 1A-1C that includes a single stabilizing member or assembly;

[0017] Figures 9A-9C illustrate an embodiment of a mid-wheel drive wheelchair that is similar to the wheelchair shown in Figures 1A-1C where two triggers or sensors are linked;

[0018] Figures 10A-10C illustrate an embodiment of a mid-wheel drive wheelchair that is similar to the wheelchair shown in Figures 1A-1C that includes a single trigger or sensor;

[0019] Figures 11A-11C illustrate an embodiment of a mid-wheel drive wheelchair that is similar to the wheelchair shown in Figures 1A-1C that includes a rear caster position sensing linkage coupled to a single trigger or sensor that indicates when both rear casters drop relative to a frame;

[0020] Figures 12A-12C illustrate the wheelchair of Figures 11A-11C, where one rear caster has moved downward relative to a frame;

[0021] Figures 13A-13C illustrate the wheelchair of Figures 11A-11C, where the wheelchair is exhibiting a tipping behavior;

[0022] Figures 14A-14C illustrate an embodiment of a mid-wheel drive wheelchair that is similar to the wheelchair shown in Figures 1A-1C that includes a rear caster position sensing linkage coupled to a pair of triggers or sensor that indicates when both rear casters drop relative to a frame;

[0023] Figures 15A-15C illustrate the wheelchair of Figures 14A-14C, where one rear caster has moved downward relative to a frame;

[0024] Figures 16A-16C illustrate the wheelchair of Figures 14A-14C, where the wheelchair is exhibiting a tipping behavior;

[0025] Figure 17A illustrates a rear view of an embodiment of a rear caster suspension with a rear caster position sensing arrangement;

[0026] Figure 17B is a view taken along lines 17B-17B in Figure 17A, illustrating a side view of the rear caster suspension and rear caster position sensing arrangement;

[0027] Figure 17C is a view taken along lines 17C-17C in Figure 17A, illustrating a top view of the rear caster suspension and rear caster position sensing arrangement;

[0028] Figures 18A and 18B illustrate the rear caster suspension and rear caster position sensing arrangement of Figures 17A-17C, where one rear caster has moved downward;

[0029] Figures 19A and 19B illustrate the rear caster suspension and rear caster position sensing arrangement of Figures 17A-17C, where both rear casters have moved downward;

[0030] Figures 20A-20C illustrate an embodiment of a rear caster suspension and rear caster position sensing arrangement that is similar to the rear caster suspension and rear caster position sensing arrangement shown in Figures 17A-17C where movement of a first rear caster pivot arm depends on a position of a second rear caster pivot arm;

[0031] Figures 21A and 21B illustrate the rear caster suspension and rear caster position sensing arrangement of Figures 20A-20C, where one rear caster has moved downward;

[0032] Figures 22A and 22B illustrate the rear caster suspension and rear caster position sensing arrangement of Figures 20A-20C, where further downward movement of one rear caster is inhibited by a second rear caster;

[0033] Figure 23A illustrates a rear of an embodiment of a rear caster suspension and rear caster position sensing arrangement;

[0034] Figure 23B is a view taken along lines 23B-23B in Figure 23A, illustrating a side of the rear caster suspension and rear caster position sensing arrangement;

[0035] Figure 23C is a view taken along lines 23C-23C in Figure 23A, illustrating a top of the rear caster suspension and rear caster position sensing arrangement;

[0036] Figures 24A-24C illustrate the rear caster suspension and rear caster position sensing arrangement of Figures 23A-23C, where downward movement of one rear caster is inhibited by a second rear caster;

[0037] Figures 25A-25C illustrate an embodiment of a rear caster suspension and rear caster position sensing arrangement that is similar to the rear caster suspension and rear caster position sensing arrangement of Figures 23A-23C, where the rear casters are connected to a pivotable arm;

[0038] Figure 26 illustrates an embodiment of a mid-wheel drive wheelchair that includes a tip or stability control system and front caster pivot arm that are coupled to drive assemblies;

[0039] Figure 27 illustrates an embodiment of a mid-wheel drive wheelchair that includes a tip or stability control system and front caster pivot arms that are coupled to drive assemblies;

[0040] Figure 28 illustrates an embodiment of a mid-wheel drive wheelchair that includes a tip or stability control system and front caster pivot arms that are coupled to drive assemblies;

[0041] Figure 29 illustrates an embodiment of a mid-wheel drive wheelchair that includes a tip or stability control system and front caster pivot arms that are coupled to drive assemblies;

[0042] Figure 30 illustrates an embodiment of a mid-wheel drive wheelchair that includes a tip or stability control system and front caster pivot arms that are coupled to drive assemblies;

[0043] Figure 31 illustrates an embodiment of a mid-wheel drive wheelchair that includes a tip or stability control system and front caster pivot arms that are coupled to drive assemblies;

[0044] Figure 32 is a perspective view of an embodiment of a mid-wheel drive wheelchair that includes a tip or stability control system;

[0045] Figure 33 is a side view of the mid-wheel drive wheelchair of Figure 32;

[0046] Figure 34 is a view taken along lines 34-34 in Figure 33;

[0047] Figure 35 is a view taken along lines 35-35 in Figure 33;

[0048] Figure 36 is a view taken along lines 36-33 in Figure 33;

[0049] Figure 37 is a view taken along lines 37-37 in Figure 33;

[0050] Figure 38 is a view of the wheelchair of Figure 32 with components removed;

[0051] Figure 39 is a side view of the mid-wheel drive wheelchair with components removed of Figure 38;

[0052] Figure 40 is a view taken along lines 40-40 in Figure 39;

[0053] Figure 41 is a view taken along lines 41-41 in Figure 40;

[0054] Figure 42 is an enlarged portion of Figure 38 as indicated by reference FIG. 42 in Figure 38;

[0055] Figure 43 is a schematic illustration of a vibration damping assembly;

[0056] Figure 44 illustrates a perspective view of a rear caster position sensing arrangement and rear caster suspension of the wheelchair illustrated by Figure 32;

[0057] Figure 45 is a side view of the rear caster position sensing arrangement and rear caster suspension of Figure 44;

[0058] Figure 46 is a view taken along lines 46-46 in Figure 45;

[0059] Figure 47 is a view taken along lines 47-47 in Figure 45;

[0060] Figure 48 is a view taken along lines 48-48 in Figure 46;

[0061] Figure 49 is a view taken along lines 49-49 in Figure 48;

[0062] Figure 49A is a view similar to Figure 49, where the rear caster position sensing arrangement has moved to an engaged position; and

[0063] Figure 50 is a view taken along lines 50-50 in Figure 45.

DETAILED DESCRIPTION

[0064] The present description provides multiple embodiments of suspension systems for vehicles, such as, wheelchairs, including, but not limited to mid-wheel drive wheelchairs, scooters, and other personal mobility vehicles. The drawings illustrate the suspension systems on mid-wheel drive wheelchairs. However, the described suspensions can be implemented on any personal mobility vehicle, including scooters and rear drive wheelchairs.

[0065] The suspension systems include a tip or stability control system. Generally, the control system includes a trigger or sensor for sensing when conditions exist that may cause the vehicle to exhibit a tipping behavior, which can be either forward or rearward, and a stabilizing member or assembly that stabilizes the suspension system to prevent any further tipping behavior. The trigger or sensor also senses when the vehicle is no longer subject to conditions that may cause it to exhibit a tipping behavior and causes the stabilizing member or assembly to no longer inhibit movement of the suspension system. A variety of different control system features are disclosed in the context of the following exemplary embodiments. The individual features of the following embodiments may be used alone or in combination with features of other embodiments.

[0066] One feature of some control system embodiments disclosed herein is that upward movement of one front caster is inhibited to prevent tipping only if upward movement of the other front caster is also inhibited. Another feature of some control system embodiments disclosed herein is that the relative positions of two rear casters are sensed to determine a tipping behavior. For example, a tipping behavior may be indicated only when both rear casters move downward relative to a frame.

[0067] Figures 1A, 1B, and 1C schematically illustrate a mid-wheel drive wheelchair 100 that includes a tip or stability control system that comprises one or more sensors 112 and one or more stabilizing members or assemblies 114. The control system 100 can also be applied to a wide variety of other vehicles, including but not limited to, rear drive wheel chairs, front drive wheel chairs, scooters, and other personal mobility vehicles. The wheelchair 100 includes a frame 102, a seat 104 supported by the frame,

first and second drive wheels 106 that support the frame, first and second front casters 108a, 108b, first and second rear casters 110a, 110b, one or more sensors 112, and one or more stabilizing members or assemblies 114. In this application, the term "frame" refers to any component or combination of components that are configured for mounting of a drive assembly and a caster pivot arm. The first and second front casters 108a, 108b are coupled to the frame 102 such that the front casters are moveable upwardly and downwardly with respect to the frame as indicated by double arrow 116. In the example illustrated by Figures 1A, 1B, and 1C, the front casters are independently coupled to the frame 102 by separate pivot arms 118a, 118b. In another embodiment, the pivot arms 118a, 118b are coupled such that movement of one pivot arm is transferred to the other pivot arm. For example, a torsion bar (not shown) may couple the pivot arms 108a, 108b. The first and second rear casters 110a, 110b are coupled to the frame 102 such that the rear casters are moveable upwardly and downwardly with respect to the frame. In the example illustrated by Figures 1A, 1B, and 1C, the rear casters are independently coupled to the frame 102 by separate rear caster pivot arms 120a, 120b. In another embodiment, the rear caster pivot arms 120a, 120b are coupled such that movement of one pivot arm is transferred to the other pivot arm (See the embodiment of Figure 23 for example).

[0068] One stabilizing member 114 is coupled to each front caster pivot arms 118a, 118b and to the frame 102. However, any number of stabilizing members 114 can be used, may take any form, and may be coupled to the front caster pivot arm and the frame in any manner that allows the stabilizing member or members to inhibit movement of one or more of the front caster pivot arms with respect to the frame in at least one direction. Examples of stabilizing members that may be used include, but are not limited to, the stabilizing members disclosed herein and the locking members disclosed in United States Patent No. 6,851,711 to Goertzen et al, United States Patent Application Publication No. 2004/0150204, and United States Patent Application Publication No. 2005/0151360 to Bertrand et al.

[0069] One trigger or sensor 112 is coupled to each of the rear caster pivot arms 120a,b in the example illustrated by Figures 1A, 1B, and 1C. However, any number of triggers or sensors 112 can be used, may take any form and may be positioned in any way that allows tipping of the frame 102 to be sensed. Examples of triggers or sensors

that may be used include, but are not limited to, the triggers or sensors disclosed herein and the triggers or sensors disclosed in United States Patent No. 6,851,711 to Goertzen et al, United States Patent Application Publication No. 2004/0150204, and United States Patent Application Publication No. 2005/0151360 to Bertrand et al. Tipping may be sensed in ways that are unrelated to movement of the rear casters relative to the frame. Examples of ways a tipping behavior may be sensed include, but are not limited to, the ways tipping is sensed in United States Patent No. 6,851,711 to Goertzen et al, United States Patent Application Publication No. 2004/0150204, and United States Patent Application Publication No. 2005/0151360 to Bertrand et al.

[0070] Figure 2 is a flow chart that illustrates an embodiment of a method 200 of stabilizing a mid-wheel drive wheelchair frame. In the method, upward and downward movement of the front casters 108a, 108b is allowed (block 202) when at least one rear caster 110a, 110b is in a normal operating position. When both of the rear casters 110a, 110b move out of a normal operating position, the front casters 108a, 108b are locked (block 204) against at least upward movement relative to the frame. The front casters 108a, 108b may be locked against both upward and downward movement or only against upward movement.

[0071] Normal operating positions of the rear casters 110a and 110b include the positions of the rear casters when the wheelchair is stationary on level ground (referred to herein as the stationary, level ground position). Normal operating positions of the rear casters 110a and 110b also include any position of the rear casters relative to the frame where the rear caster(s) are rotated as indicated by arrow 70 in Figure 1B. Normal operating positions of the rear casters 110a, 110b also include any positions where the rear caster(s) are rotated relative to the frame 102 as indicated by arrow 72 by less than a predetermined distance or angle below the stationary, level ground position. In the exemplary embodiment, the predetermined distance or angle from the stationary, level ground position in the direction indicated by arrow 72 corresponds to a distance or angle that is indicative of a tipping behavior of the wheelchair. For example, movement of the rear caster(s) relative to the frame in the direction indicated by arrow 72 that is greater than ½ inch may be indicative of tipping of the wheelchair and out of the normal operating position of the rear casters. However, the normal operating position of the rear casters 110a and 110b will vary from one wheelchair to another.

[0072] Figures 1, 3 and 4 illustrate a 100 wheelchair with a stabilizing assembly 114 that inhibits upward movement of the first and second front casters 108a, 108b with respect to the wheelchair frame 102 based on movement of first and second rear casters 110a, 110b with respect to the wheelchair frame. Referring to Figures 1A, 1B and 1C, the stabilizing assembly 114 allows upward and downward movement (as indicated by double arrow 116) of the first and second front casters 108a, 108b relative to the frame 102 when the first and second rear casters 110a, 110b are in normal operating positions relative to the frame.

[0073] Figures 3A, 3B, and 3C illustrate the wheelchair 100 where the rear caster 110a is in a normal operating position and the rear caster 110b has dropped below the range of normal operating positions. This condition may occur when one of the rear casters falls into a depression 302 as illustrated by Figures 3A, 3B, and 3C. This condition may also occur when the wheelchair travels laterally along an inclined surface. When the rear caster 110a is in a normal operating position and the rear caster 110b has dropped below the range of normal operating positions, both of the stabilizing members 114 continue to allow upward and downward movement of the first and second front casters 108a, 108b relative to the frame 102.

[0074] Figures 4A, 4B, and 4C illustrate the wheelchair 100 exhibiting a tipping behavior. The frame 102 of the wheelchair 100 is pitched forward toward the front casters 108a, 108b. As a result, the rear casters 110a, 110b move downward relative to the frame 102 to maintain contact with the ground. This downward movement positions both of the rear casters 110a, 110b below the range of normal operating positions relative to the frame 102. The sensors or triggers 112 sense that the rear casters 110a, 110b are both below the range of normal operating positions and cause the stabilizing members 114 to engage. In the example illustrated by Figures 4A, 4B and 4C, engagement of the stabilizing assemblies locks the first and second front casters 108a, 108b against upward movement relative to the frame, but allow the front casters to move downward as indicated by arrow 400 when the stabilizing assembly is engaged. In another embodiment, the stabilizing assembly 114 locks the front caster pivot arms against both upward and downward movement with respect to the pivot arm when engaged. In another embodiment, engagement of the stabilizing assemblies 114

greatly increase the amount of force required to move the front casters upward with respect to the frame. In another embodiment, engagement of the stabilizing assemblies 114 causes the stabilizing assemblies to apply additional force to move the front casters downward relative to the frame and return the frame to a normal operating position. When one or more of the rear casters return to a normal operating position relative to the frame, the sensors or triggers 112 disengage the stabilizing assembly to allow upward and downward movement of the first and second front casters relative to the frame.

[0075] The stabilizing member, stabilizing members, or stabilizing assembly 114 or assemblies can take a wide variety of different forms. For example, the stabilizing assembly 114 may be a fluid cylinder 500 as illustrated by Figure 5. One fluid cylinder 500 may be coupled between each front caster 108a, 108b at connection 501 and the frame 102 at connection 503, or a single fluid cylinder may be coupled between the front casters and the frame. As used herein, "coupled" refers to both direct coupling of two or more components or the indirect coupling of components such as through one or more intermediary components or structures. The fluid cylinder 500 includes a piston 502, a housing 504 that defines a piston chamber 506, a rod 508, and a valve 510. The rod 508 extends into the housing 504 and is connected to the piston. The piston 502 divides the chamber 506 into two compartments 512, 514. The valve 510 selectively allows fluid to flow between the two compartments when the valve is open and prevents flow between the two compartments when the valve is closed. As such, the rod 508 can move into and out of the housing 504 when the valve 510 is open and the position of the piston 502 and the rod is substantially fixed when the valve is closed. When the valve 510 is open, the movement of the fluid between the chambers 512, 514 and through the valve 510 provides a damping effect. As such, the cylinder 500 acts as a shock absorber when the valve is open and damps upward and downward movement of the front caster. In one embodiment, when the valve is "closed" fluid is allowed flow from the compartment 512 to the compartment 514, but not from the compartment 514 to the compartment 512. As such, the rod 508 may be moved into the housing 504, but not out the housing when the valve 510 is closed. When the valve 510 is closed, the cylinder 500 damps downward movement of the front caster and inhibits upward movement of the front caster. One acceptable fluid cylinder that may be used is model number Koa8kx-2-06-304/000N from Easylift.

[0076] Figure 6 illustrates a cylinder 600 that is similar to the cylinder 500 illustrated in Figure 5, but includes a spring 602 that biases or returns the rod 508 to a retracted position. In an embodiment where the valve prevents fluid flow between the compartments 512, 514 when the valve is closed, the actuator 600 biases the front caster toward contact with the ground only when the valve 510 is open. In an embodiment where the valve allows flow from the compartment 512 to the compartment 514, but not from the compartment 514 to the compartment 512 when the valve is closed, the actuator 600 biases the front caster toward contact with the ground when the valve 510 is open or closed. One acceptable fluid cylinder with a spring return that may be used is model number k0m2pm2-060-345-002/50N from Easylift.

[0077] The stabilizing cylinders 500, 600 illustrated by Figures 5 and 6 are two examples of the wide variety of different stabilizing assemblies 114 that can be used. Any arrangement capable of inhibiting upward and/or downward movement of a front caster relative to a frame can be used. As noted above, any of the arrangements for inhibiting movement of a front caster with respect to a frame disclosed in United States Patent No.: 6,851,711 to Goertzen et al., United States Patent Application Publication No.: 2004/0150204 to Goertzen et al., and United States Patent Application Publication No.: 2005/0151360 to Bertrand et al. can be used.

[0078] Stabilizing members or assemblies 114 and triggers or sensors 112 may be arranged in a wide variety of different ways to inhibit further tipping when both rear casters 110a, 110b drop below the range of normal operating positions. Referring to Figures 7A, 7B, and 7C a trigger or sensor 112 is coupled to each rear caster 110a, 110b. A stabilizing member or assembly 114 is coupled to each front caster 108a, 108b. The stabilizing assemblies 114 are linked by a coupling 700, such that each stabilizing member or assembly 114 will not engage unless the other stabilizing assembly also engages. The coupling 700 may take a wide variety of different forms. For example, the coupling 700 may be a mechanical linkage, and electronic linkage, an electromechanical linkage or a pneumatic or hydraulic linkage. The stabilizing members or assemblies 114 may be mechanically linked by wire, a rod or a clutch mechanism, electromechanically linked by a pair of solenoid actuators that are in electronic communication. When the stabilizing assemblies 114 are fluid actuators, the

stabilizing assemblies may be pneumatically or hydraulically linked by conduits and valves that connect the chambers of the fluid actuators. For example, fluid devices from Easylift may be linked in this manner.

[0079] In the example illustrated by Figures 8A, 8B, and 8C a trigger or sensor 112 is coupled to each rear caster 110a, 110b and a single stabilizing assembly 114 is coupled to both of the front casters 108a, 108b. The stabilizing member or assembly 114 is in communication with both triggers or sensors 112, such that the stabilizing assembly 114 will not engage unless both of the triggers or sensors 112 sense a condition that indicates a tipping behavior of the frame 102, such as downward movement of both rear casters 110a, 110b relative to the frame 102. The single stabilizing assembly 114 may be arranged to permit independent upward and downward movement of the front casters 108a, 108b.

[0080] In the examples illustrated by Figures 9A, 9B and 9C, a trigger or sensor 112 is coupled to each rear caster 110a, 110b and a stabilizing assembly 114 is coupled to each front caster 108a, 108b. The triggers or sensors 112 are linked by a coupling 900, such that each sensor or trigger will not cause engagement of its respective stabilizing assembly 114 unless both of the sensors or triggers sense a tipping behavior of the wheelchair. The coupling 900 may take a wide variety of different forms. For example, the coupling 900 may be a mechanical linkage, and electronic linkage, an electromechanical linkage or a pneumatic or hydraulic linkage. The triggers or sensors 112 may be mechanically linked by wire or a rod, electromechanically linked by a pair of solenoid actuators that are in electronic communication, and/or pneumatically or hydraulically linked by a pair of fluid actuators that are in fluid communication.

[0081] In the example illustrated by Figures 10A, 10B, and 10C a single trigger or sensor 112 is coupled to both rear casters 110a, 110 and a single stabilizing assembly 114 is coupled to both of the front casters 108a, 108b. The single stabilizing assembly 114 is controlled by the single trigger or sensor 112. In one embodiment, the single trigger or sensor 112 will not detect a tipping behavior unless both rear casters fall below their range of normal operating positions. The single trigger or sensor 112 causes the single stabilizing assembly 114 to engage when a tipping behavior is sensed.

The single stabilizing assembly 114 may be arranged to permit independent upward and downward movement of the front casters 108a, 108b when disengaged and independent downward movement of the front casters when engaged.

[0082] Figures 11, 12 and 13 illustrate a wheelchair 1100 with a rear caster position sensing linkage 1101 that allows a single trigger or sensor 112 to determine when both of the rear casters 110a, 110b have dropped below their normal operating positions with respect to the frame 102. The linkage 1101 and sensor 112 can be used to control a pair of stabilizing members 114 as illustrated, or a single stabilizing member (see Figure 10). The linkage 1101 is pivotally connected to the frame at pivot point 1102. The linkage 1101 includes a rear caster pivot arm sensing portion 1104 and a sensor activating portion 1106. The rear caster pivot arm sensing portion 1104 and a sensor activating portion 1106 are pivotable around the pivot point 1102. The sensing portion 1104 is in connection with the rear caster pivot arms 120a, 120b. The sensor activating portion 1106 is in communication with the trigger or sensor 112.

[0083] Referring to Figures 11A, 11B and 11C, when the first and second rear casters 108a, 108b are in normal operating positions, the first and second rear caster pivot arms 120a, 120b maintain the rear caster pivot arm sensing portion 1104 and the sensor activating portion 1106 in a first or disengaged position shown in Figures 11A, 11B, and 11C. When the sensor activating portion 1106 is in the first position, the sensor 112 controls the stabilizing assembly 114 to allow upward and downward movement (as indicated by double arrow 1116) of the first and second front casters 108a, 108b relative to the frame 102. In the example illustrated by Figures 11A, 11B, and 11C, the sensor activating portion 1106 is in engagement or close to the sensor in the first or disengaged position. In another embodiment, the sensor activating portion 1106 is spaced apart from the sensor in the first position or disengaged position.

[0084] Figures 12A, 12B, and 12C illustrate the wheelchair 1100 where the rear caster 110a is in a normal operating position and the rear caster 110b has dropped below the range of normal operating positions. When the rear caster 110a is in a normal operating position and the rear caster 110b has dropped below the range of normal operating positions, the first rear caster pivot arms 120a maintains the rear caster pivot

arm sensing portion 1104 and the sensor activating portion 1106 in the first or disengaged position.

[0085] Figures 13A, 13B, and 13C illustrate the wheelchair 100 exhibiting a tipping behavior. The frame 102 of the wheelchair 100 is pitched forward toward the front casters 108a, 108b. As a result, the rear casters 110a, 110b move downward relative to the frame 102 to maintain contact with the ground. This downward movement positions both of the rear casters 110a, 110b below the range of normal operating positions with respect to the frame. When the first and second rear casters 108a, 108b fall below their ranges of normal operating positions, the rear caster pivot arm sensing portion 1104 and the sensor activating portion 1106 pivot to a second or engaged position shown in Figures 13A, 13B, and 13C. When the sensor activating portion 1106 is in the second or engaged position, the sensor 112 controls the stabilizing assembly 114 to inhibit at least upward movement of the first and second front casters 108a, 108b relative to the frame 102. In the example illustrated by Figures 13A, 13B, and 13C, the sensor activating portion 1106 is spaced apart from the sensor in the second or engaged position. In another embodiment, the sensor activating portion 1106 is in contact or close to the sensor in the second or engaged position. When one or more of the rear casters return to a normal operating position relative to the frame, the linkage 1101 is moved back to the disengaged position and the sensor or trigger 114 causes the stabilizing assembly to disengage and allow upward and downward movement of the front casters relative to the frame.

[0086] Figures 14, 15 and 16 illustrate a wheelchair 1400 with a rear caster position sensing linkage 1401 that actuates a pair of triggers or sensors 112 when both of the rear casters 110a, 110b have dropped below their normal operating positions with respect to the frame 102 and does not actuate either of the triggers or sensors 112 when one or more of the rear casters 110a, 110b are in their normal operating position with respect to the frame 102. The linkage 1401 and sensors 112 can be used to control a pair of stabilizing members 114 as illustrated, or a single stabilizing member (see Figure 8). The linkage 1401 is pivotally connected to the frame at pivot point 1402. The linkage 1401 includes a rear caster pivot arm sensing portion 1404 and a sensor activating portion 1406. The rear caster pivot arm sensing portion 1404 and a sensor

activating portion 1406 are pivotable around the pivot point 1402. The sensing portion 1404 is coupled to the rear caster pivot arms 120a, 120b. The sensor activating portion 1406 is in communication with both of the triggers or sensors 112.

[0087] Referring to Figures 14A, 14B and 14C, when the first and second rear casters 108a, 108b are in normal operating positions, the first and second rear caster pivot arms 120a, 120b maintain the rear caster pivot arm sensing portion 1404 and the sensor activating portion 1406 in a first or engaged position shown in Figures 14A, 14B, and 14C. When the sensor activating portion 1406 is in the first position, the sensor activating portion 1406 maintains both sensors 112 in a first state. In the first state, the two sensors 112 control the stabilizing assemblies 114 to allow upward and downward movement (as indicated by double arrow 1416) of the first and second front casters 108a, 108b relative to the frame 102.

[0088] Figures 15A, 15B, and 15C illustrate the wheelchair 1400 where the rear caster 110a is in a normal operating position and the rear caster 110b has dropped below the range of normal operating positions. When the rear caster 110a is in a normal operating position and the rear caster 110b has dropped below the range of normal operating positions, the first rear caster pivot arm 120a maintains the rear caster pivot arm sensing portion 1404 and the sensor activating portion 1106 in the first or disengaged position.

[0089] Figures 16A, 16B, and 16C illustrate the wheelchair 1400 exhibiting a tipping behavior. The rear casters 110a, 110b move downward, below the range of normal operating positions relative to the frame. When the first and second rear casters 108a, 108b fall below their ranges of normal operating positions, the rear caster pivot arm sensing portion 1404 and the sensor activating portion 1406 move to a second or engaged position shown in Figures 16A, 16B, and 16C. When the sensor activating portion 1406 is in the second or engaged position, the sensor activating portion 1406 places both sensors 112 in a second state. In the second state, the sensors 112 control the stabilizing assemblies 114 to inhibit at least upward movement of the first and second front casters 108a, 108b relative to the frame 102. When one or more of the rear casters return to a normal operating position relative to the frame, the linkage 1401

is moved back to the disengaged position and both sensors or triggers 114 cause the stabilizing assemblies 114 to disengage and allow upward and downward movement of the front casters relative to the frame.

[0090] Figures 17, 18 and 19 illustrate an embodiment of a rear caster suspension 1700 with a rear caster position sensing arrangement 1706. The rear caster suspension 1700 includes a pair of rear caster assemblies 1702a, 1702b, a pair of sensors or triggers 1704a, 1704b, the rear caster position sensing arrangement 1706, and a pair of biasing members 1708a, 1708b, such as springs or other resilient members. The rear caster position sensing arrangement 1706 is in communication with both rear caster assemblies 1702a, 1702b. When one or both of the rear casters 1702a, 1702b are in a normal operating position, the rear caster position sensing arrangement communicates this condition to both sensors or triggers 1704a, 1704b. When both of the rear casters 1704a, 1704b fall below their normal operating positions, the rear castor position sensing arrangement communicates this condition to both sensors or triggers 104a and 104b. As a result, both sensors or triggers 1704a, 1704b are placed in an engaged state when both rear casters 1702a, 1702b fall below their normal operating positions and both sensors or triggers 1704a, 1704b are placed in a disengaged state when one or both of the rear casters are in a normal operating position. The conditions of the rear casters can be communicated by the rear caster position sensing arrangement in a wide variety of different ways. For example, the rear caster position sensing arrangement may be a mechanical linkage or assembly that communicates the condition of the rear casters to the sensors, as illustrated by Figures 17A-17C.

[0091] In the example illustrated by Figures 17, 18 and 19, compression springs are schematically represented. However, extension springs can be used, or the biasing members can take some other form. Each rear caster assembly 1702 includes a caster 1710 and a pivot arm 1712. The castor 1710 is rotatable about an axis 1714 with respect to the pivot arm 1712. The pivot arms 1712 are coupled to a wheelchair frame 1701 (See Figure 17B) at pivots 1716a, 1716b. The sensors or triggers 1704a, 1704b are supported by the wheelchair frame 1701.

[0092] The illustrated rear caster position sensing arrangement 1706 includes a pair of spaced apart trigger actuating members 1720a, 1720b that are coupled to the wheelchair frame 1701 at pivots 1722a, 1722b. The trigger actuating members 1720a, 1720b are connected together by a bar 1724. The biasing members 1708a, 1708b are interposed between the rear caster assemblies 1702a, 1702b and the trigger actuating members 1720a, 1720b.

[0093] The rear caster suspension 1700 and rear caster position sensing arrangement 1706 can be included on any type of wheelchair to sense a tipping behavior and control one or more stabilizing members or a stabilizing assembly to inhibit further tipping. Referring to Figures 17A, 17B and 17C, when the rear caster assemblies 1702a, 1702b are in normal operating positions relative to the frame, 1701, the biasing members 1708a, 1708b are compressed between the trigger actuating members 1720a, 1720b and the rear caster pivot arms 1712a, 1712b. The biasing members 1708a, 1708b force the trigger actuating members 1708a, 1708b into engagement with the sensors or triggers 1704a, 1704b to place both of the sensors in a depressed or disengaged state.

[0094] Figures 18A and 18B illustrate the rear caster suspension 1700 and rear caster position sensing arrangement 1706 where the rear caster assembly 1702b is in a normal operating position and the rear caster assembly 1702a has dropped below the range of normal operating positions. This condition may occur when the wheelchair travels laterally along an inclined surface 1800. This condition may also occur when one of the rear casters falls into a depression (see Figures 3A, 3B, and 3C). When the rear caster assembly 1702b is in a normal operating position and the rear caster assembly 1702a has dropped below the range of normal operating positions, the biasing member 1708b remains compressed between the trigger actuating member 1720b and the rear caster pivot arms 1712b, while the biasing member 1708a extends to a relaxed state (See Figure 18B). The biasing member 1708b forces the trigger actuating member 1720b into engagement with the sensor or trigger 1704b. The bar 1724 that connects the trigger actuating member 1720a to the trigger actuating member 1720b holds the trigger actuating member 1720a in engagement with the sensor or trigger 1704a. The trigger actuating members 1720a, 1720b place both of the sensors in a depressed or

disengaged state when the rear casters are in the positions shown in Figures 18A and 18B.

[0095] Figures 19A and 19B illustrate the rear caster suspension 1700 and rear caster position sensing arrangement 1706 where the rear caster assemblies 1702a, 1702 have both dropped below the range of normal operating positions. This condition may occur when the wheelchair exhibits a tipping behavior. When both of the rear caster assemblies 1702a, 1702b have dropped below the range of normal operating positions, the biasing members 1708a, 1708b both extend to a relaxed state and may pull the trigger actuating members 1708a, 1708b out of engagement with the sensors or triggers 1704a, 1704b to place the sensors or triggers in an engaged state. When one or more of the caster assemblies 1702a, 1702b return to a normal operating position with respect to the frame 1701, both sensors or triggers are returned to the disengaged state.

[0096] Figures 20, 21 and 22 illustrate an embodiment of a rear caster suspension 2000 and rear caster position sensing arrangement 2006 where movement of one caster assembly 2002a is limited, depending on the position of the second caster assembly 2002b. The rear caster suspension includes a pair of rear caster assemblies 2002a, 2002b, a pair of sensors or triggers 2004a, 2004b, the rear caster position sensing arrangement 2006, and a pair of biasing members 2008a, 2008b, such as springs or other resilient members. In the example illustrated by Figures 20, 21 and 22, compression springs are schematically represented. However, extension springs can be used, or the biasing members can take some other form. Each rear caster assembly 2002 includes a caster 2010, a pivot arm 2012a, 2012b, and a stop member 2013a, 2013b attached to the pivot arm. . The pivot arms 2012 are coupled to a wheelchair frame 2001 at pivots 2016a, 2016b (See Figure 20B). The stop members 2013a, 2013b rotate with the pivot arms 2012a, 2012b about the pivots 2016a, 2016b. The sensors or triggers 2004a, 2004b are supported by the wheelchair frame 2001.

[0097] The illustrated rear caster position sensing arrangement 2006 includes a pair of spaced apart trigger actuating members 2020a, 2020b that are coupled to the wheelchair frame 2001 at pivots 2022a, 2022b. The elongated members 2020a, 2020b are connected together by a bar 2024. The bar 2024 extends past the pivots 2022a,

2022b for selective engagement with the stop members 2013a, 2013b. The biasing members 2008a, 2008b are interposed between the rear caster assemblies 2002a, 2002b and the trigger actuating members 2020a, 2020b.

[0098] The rear caster suspension 2000 and rear caster position sensing arrangement 2006 operate to place the sensors in the disengaged and engaged states based on the positions of the rear caster assemblies 2002a, 2002b. The rear caster suspension 2000 and rear caster position sensing arrangement 2006 limit the relative positions of the rear caster assemblies 2002a, 2002b. In one embodiment, the suspension arrangement 2000 does not include a rear caster position sensing arrangement, and the sensors 2004a, 2004b are omitted. In this embodiment, the elongated members 2020a, 2020b may be modified accordingly or replaced with a different arrangement for coupling the biasing members 2008a, 2008b to the bar 2024.

[0099] Referring to Figures 20A, 20B and 20C, when one or both of the rear caster assemblies 2002a, 2002b are in normal operating positions relative to the frame 2001, the biasing members 2008a, 2008b hold the trigger actuating members 2020a, 2020b against the sensors or triggers 2004a, 2004b (or some other stop if the sensors are omitted). The trigger actuating members 2020a, 2020b position the bar 2024 with respect to the stop members 2013. As long as the force applied by one or more of the biasing members 2008a, 2008b is sufficient to maintain the trigger actuating members 2020a, 2020b against the sensors or triggers 2004a, 2004b, the position of the bar 2024 is fixed. When there is a gap 2025 (Figure 20B) between the bar 2024 and the stop members 2013a, 2013b, the caster assemblies 2002 are free to move upwardly and downwardly with respect to one another.

[00100] Figures 21A and 21B illustrate the situation where the rear caster assembly 2002b drops, such that the stop member 2013b rotates into contact with the bar 2024. When the stop member 2013b engages the bar 2024, further movement of the rear caster assembly 2002b is inhibited by the bar. Referring to Figures 22A and 22B, the bar 2024 prevents the caster assembly 2002a from falling into a deep depression. The rear caster assembly 2002a can be moved downward by applying a downward force indicated by arrow 2050 in Figures 22A and 22B. The force is applied

by the stop member 2013b, to the bar 2024, and to the trigger actuating member 2020b. If the force applied to trigger actuating member 2020a is sufficient to compress the biasing member 2008b, the trigger actuating member 2020b moves toward the rear caster pivot arm 2012b. As a result, the elongated members 2020a, 2020b may move away from the triggers or sensors 2004a, 2004b. When both rear casters 1010 fall away from the frame 2001, the sensors 2004a, 2004b are placed in the engaged state in the same manner as described with respect to the rear caster suspension and trigger arrangement 1700. When one or both of the rear casters are in a normal operating position, the sensors 2004a, 2004b are placed in a disengaged state in the same manner as described with respect to the rear caster suspension and trigger arrangement 1700.

[00101] Figures 23 and 24 illustrate another embodiment of a rear caster suspension 2300 with a rear caster position sensing arrangement 2306. The rear caster suspension includes a rear caster assembly 2302, a pair of sensors or triggers 2304a, 2304b, the rear caster position sensing arrangement 2306, and a biasing member 2308, such as a spring. In the example illustrated by Figures 23 and 24, a compression spring is schematically represented. However, an extension spring can be used, or the biasing member can take some other form.

[00102] The rear caster assembly 2302 includes a pair of casters 2310a, 2310b and a pivot arm 2312. The pivot arm 2312 includes a first member 2313 coupled to a wheelchair frame 2301 at a pivot 2316 (See Figure 23B) and a second member 2315 connected to the first member 2313, such that the pivot arm 2312 has a generally "T-shaped" configuration. The castors 2310a, 2310b are connected to ends of the second member 2315 and are rotatable with respect to the pivot arm 2312.

[00103] The sensors or triggers 2304a, 2304b are supported by the wheelchair frame 2301. The illustrated rear caster position sensing arrangement 2306 includes a pair of spaced apart elongated members 2319a, 2319b (See Figure 23A) that support a trigger actuating member 2320 and are coupled to the wheelchair frame 2301 at pivots 2322a, 2322b. The rear caster position sensing arrangement 2306 could also be configured to include only one member (or any other number of members) member that supports the rear caster position sensing arrangement 2306. The biasing member 2308

is interposed between the rear caster assembly 2302 and the trigger actuating member 2320.

[00104] The rear caster suspension 2300 with the rear caster position sensing arrangement 2306 can be included on any type of wheelchair to sense a tipping behavior and control one or more stabilizing members or stabilizing assemblies. Referring to Figures 23A, 23B and 23C, when the rear caster assembly 2302 is in a normal operating position relative to the frame 2301, the biasing member 2308 is compressed between the trigger actuating member 2320 and the rear caster pivot arm 2312. The biasing members 2308 force the trigger actuating member 2308 into engagement with both of the sensors or triggers 2304a, 2304b to place both of the sensors in a depressed or disengaged state.

[00105] Figures 24A, 24B and 24C illustrate the rear caster suspension 2300 and the rear caster position sensing arrangement 2306 where one of the rear casters 2310a of the rear caster assembly 2302a encounters a depression in the support surface. Since both rear casters 2310a, 2310b are coupled to a common pivot arm, the rear caster 2310a does not drop into the depression. The biasing member 2308 remains compressed between the trigger actuating member 2320 and the rear caster pivot arms 2312a. The biasing member 2308 forces the trigger actuating member 1708 into engagement with the sensors or triggers 2304a, 2304b. When the rear caster assembly 2302 drops below the range of normal operating positions, the biasing member 2308 extends to a relaxed state and may pull the trigger actuating member 2308 out of engagement with the sensors or triggers 1704a, 1704b to place the sensors or triggers in an engaged state.

[00106] Figures 25A, 25B and 25C illustrate a rear caster suspension 2500 that is a variation of the rear caster suspension 2300 where the second member 2315 of the pivot arm is pivotally connected to the first member 2313 by a pivotal connection 2500. The pivotal connection allows the ends of the second member 2315 and the attached rear casters 2310a, 2310b to move upward and downward with respect to one another. When one rear caster 2310a moves down, the other rear caster 2310b moves up.

[00107] Stability systems can be used on a wide variety of vehicles. When used on wheelchairs, the wheelchairs may include front caster pivot arms of any configuration. The front caster pivot arms may be coupled to drive assemblies or the front caster pivot arms may be independent of the drive assemblies (See Figures 1A, 1B, 1C). The front caster pivot arms can be coupled to the drive assemblies in a wide variety of different ways. For example, the front caster pivot arms can be coupled to the drive assembly in any manner that transfers motion of the drive assembly to the front caster pivot arm, including but not limited to, a fixed length link, a variable length link, a flexible link, a chain, a cord, a belt, a wire, a gear train, or any other known structure for transferring motion from one structure to another structure. Figures 26-31 illustrate one side of wheelchairs with stability systems and pivot arms that are coupled to a drive assembly. The other side is a mirror image in the exemplary embodiment and is therefore not described in detail.

[00108] Figure 26 schematically illustrates a mid-wheel drive wheelchair 2600 that includes a tip or stability control system that comprises at least one tip sensor or trigger 2612 and at least one stabilizing member or assembly 2614. The wheelchair 2600 includes front caster pivot arms 2608 that are coupled to drive assemblies 2606. Each drive assembly 2606 includes a drive wheel 2615 and a motor or drive 2617 that propels the drive wheel 2615. The drive 2617 may comprise a motor/gear box combination, a brushless, gearless motor, or any other known arrangement for driving the drive wheel 2615. The drive assembly 2606 is connected to the frame 2602 at a pivotal connection 2619. In the example illustrated by Figure 26, the pivotal connection 2619 is disposed below a drive axis 2621 of the drive wheel 2615 when the wheelchair 2600 is resting on flat, level ground.

[00109] A front caster pivot arm 2608 is connected to each drive assembly 2606. A front caster 2631 is coupled to each front caster pivot arm 2608. The front caster 2631 is movable upwardly and downwardly as indicated by double arrow 2616 by pivotal movement of the drive 2617 about the pivotal connection 2619. Torque applied by the drive assembly 2606 urges the front caster pivot arm 2608 and the front caster 2631 upward with respect to a support surface 2633 as indicated by arrow 2635. In one embodiment, the torque applied by the drive assembly 2606 lifts the front caster 2631 off the support surface 2633. In another embodiment, the torque applied by the drive

assembly 2606 urges the front caster 2631 upward, but does not lift the front caster up off of the support surface.

[00110] Rear casters 2610 are coupled to the frame 2602 such that the rear casters are moveable upwardly and downwardly with respect to the frame. A stabilizing assembly 2614 is coupled to each front caster pivot arm 2618 and to the frame 2602. However, the stabilizing assembly can take any form that allows the stabilizing assembly to inhibit tipping behavior. One or more triggers or sensors 2612 may be coupled to rear caster pivot arms 2620 to detect a tipping behavior of the wheelchair. However, a trigger or sensor can be arranged in any manner to detect a tipping behavior of the wheelchair and need not be coupled to a rear caster. The trigger or sensor 2612 senses when conditions exist that may cause the vehicle to exhibit a tipping behavior and causes the locking assembly 2614 to engage when a tipping behavior is sensed to prevent any further tipping behavior.

[00111] Figure 27 schematically illustrates a mid-wheel drive wheelchair 2700 that includes a tip or stability control system that comprises at least one tip sensor or trigger 2712 and at least one stabilizing member or assembly. The wheelchair 2700 is similar to the wheelchair 2600 of Figure 26, but each front caster pivot arm 2708 includes upper and lower links 2710a, 2710b that define a four bar linkage. The upper link 2710a is pivotally coupled to a caster support member 2711 at a pivotal connection 2780 and is fixedly connected to the drive 2617. The lower link 2710b is pivotally coupled to the caster support member 2711 at a pivotal connection 2782 and is pivotally connected to the frame 2701 at a pivotal connection 2783.

[00112] The drive 2617, the links 2710a, 2710b, the frame 2701, and the caster support member 2711 form a four-bar linkage. The pivotal connections 2619, 2780, 2782, 2783 can be positioned at a wide variety of different locations on the frame 2701 and the caster support member 2711 and the length of the links 2706 can be selected to define the motion of the front caster as the front caster pivot arm 2708 is pivoted.

[00113] The rear casters 2710 are coupled to the frame 2701 such that the rear casters are moveable upwardly and downwardly with respect to the frame. A stabilizing assembly 2714 is coupled to each front caster pivot arm 2718 and to the

frame 2702. However, the stabilizing assembly can take any form and be coupled in any manner that allows the stabilizing assembly to inhibit tipping behavior. For example, a stabilizing assembly 2714 can be coupled to the drive 2617. One or more triggers or sensors 2712 are coupled to the rear caster pivot arms 2720 to detect a tipping behavior of the wheelchair. However, a trigger or sensor can be arranged in any manner to detect a tipping behavior of the wheelchair and need not be coupled to a rear caster. The trigger or sensor 2712 senses when conditions exist that may cause the vehicle to exhibit a tipping behavior and causes the locking assembly 2714 to engage when a tipping behavior is sensed to prevent any further tipping behavior.

[00114] Figure 28 schematically illustrates a mid-wheel drive wheelchair 2800 that includes a tip or stability control system 2802 that comprises at least one tip sensor or trigger 2812 and at least one stabilizing member or assembly. Front caster pivot arms 2808 are coupled to drive assemblies 2806 by a link 2809. The wheelchair 2800 is similar to the wheelchair 2600 of Figure 26, but the front caster pivot arm 2808 is pivotally coupled to the frame 2801 and is coupled to the drive assembly 2806 by the link 2809. Each drive assembly 2806 is mounted to the frame 2801 by a pivot arm 2820 at a drive assembly pivot axis 2822. The pivot arm 2820 extends forward and downward from the motor drive to the drive assembly pivot axis 2822. The pivot axis 2822 of the drive assembly pivot arm 2820 is below the drive wheel axis of rotation 2830 and the axis 2832 of an axle 2834 that the front caster wheel 2836 rotates around.

[00115] In one embodiment, a biasing member, such as a spring may optionally be coupled between the frame 2801 and the front caster pivot arm 2808 and/or the frame and the drive assembly 2806 to bias the front caster into engagement with the support surface 2819 or a biasing member may be included in the stabilizing assembly 2814. The front caster pivot arm 2808 is pivotally mounted to the frame at a pivot axis 2850. The pivot axis 2850 of the front caster pivot arm 2808 is forward of the drive assembly pivot axis 2822 and below the axis of rotation 2830 of the drive wheel.

[00116] The link 2809 is connected to the drive assembly pivot arm 2820 at a pivotal connection 2851 and is connected to the front caster pivot arm 2808 at a pivotal connection 2852. The link 2809 can take a wide variety of different forms. For example, the link may be rigid, flexible, or extendible in length. The link need not comprise a linear member for example, the link may be a gear train. The link 2809

may be any mechanical arrangement that transfers at least some portion of motion in at least one direction of the drive assembly 2806 to the front caster pivot arm 2808.

[00117] When the drive assembly 2806 is accelerated such that the moment arm generated by drive wheel 2815 is greater then all other moment arms around pivot axis 2822, the drive assembly 2806 pivots and pulls the link 2809. Pulling on the link 2809 causes the front caster pivot arm 2808 to move upward or urges the pivot arm upward. When the link 2809 is a variable length link, such as a spring, a shock absorber, or a shock absorber with a spring return, the drive assembly 2806 pulls the link 2809 to extend the link to its maximum length or a length where the front caster pivot arm 2808 begins to pivot. Once extended, the link 2809 pulls the front caster pivot arm 2808 upward or urges the front caster pivot arm upward.

[00118] Rear casters 2810 are coupled to the frame 2801 such that the rear casters are moveable upwardly and downwardly with respect to the frame. A stabilizing assembly 2814 is coupled to each front caster pivot arm 2808 and to the frame 2801, to the drive assembly 2806 and the frame 2801 and/or to the link 2809 and the frame 2801. However, the stabilizing assembly can take any form and be positioned in any manner that allows the stabilizing assembly to inhibit a tipping behavior. One or more triggers or sensors 2812 are coupled to the rear caster pivot arms 2820 to detect a tipping behavior of the wheelchair. However, a trigger or sensor can take any form and be arranged in any manner to detect a tipping behavior of the wheelchair and need not be coupled to a rear caster. The trigger or sensor 2812 senses when conditions exist that may cause the vehicle to exhibit a tipping behavior and causes the locking assembly 2814 to engage when a tipping behavior is sensed to prevent any further tipping behavior.

[00119] Figure 29 schematically illustrates a mid-wheel drive wheelchair 2900 that includes a tip or stability control system that comprises at least one tip sensor or trigger 2912 and at least one stabilizing member or assembly 2914. Front caster pivot arms 2908 are coupled to drive assemblies 2906 by a link 2909. The wheelchair 2900 is similar to the wheelchair 2800 of Figure 28, but the front caster pivot arm 2908 and the drive assembly pivot arm 2920 are disposed in a crossed configuration.

[00120] Each drive assembly 2906 is mounted to a frame 2901 by a pivot arm 2920 at a drive assembly pivot axis 2922. The pivot arm 2920 extends forward and downward from the motor drive to the drive assembly pivot axis 2922. The pivot axis 2922 of the drive assembly pivot arm 2920 is below the drive wheel axis of rotation 2930. The front caster pivot arm 2908 is pivotally mounted to the frame at a pivot axis 2949. The pivot axis 2949 of the front caster pivot arm 2908 is rearward of the drive assembly pivot axis 2932 and below the axis of rotation 2930 of the drive wheel. As such, the front caster pivot arm 2908 and the drive assembly pivot arm 2920 are in a crossed configuration. The front caster pivot arm 2908 and the drive assembly pivot arm 2920 may be bent or may be offset to accommodate the crossed configuration.

[00121] The link 2909 is connected to the drive assembly pivot arm 2920 at a pivotal connection 2950 and is connected to the front caster pivot arm 2908 at a pivotal connection 2952. The link 2909 can take a wide variety of different forms. Any link 2909 that transfers at least some portion of motion in at least one direction of the drive assembly 2906 to the front caster pivot arm 2908 can be used.

[00122] When the drive assembly 2906 is accelerated such that the moment arm generated by a drive wheel 2915 is greater then all other moment arms around pivot axis 2922, the drive assembly 2906 pivots and pulls the link 2909. Pulling on the link 2909 causes the front caster pivot arm 2908 to move upward or urges the pivot arm upward.

[00123] Rear casters 2910 are coupled to the frame 2901 such that the rear casters are moveable upwardly and downwardly with respect to the frame. A stabilizing assembly 2914 is coupled to each front caster pivot arm 2908 and to the frame 2901, to the drive assembly 2906 and the frame 2901 and/or to the link 2909 and the frame 2901. One or more triggers or sensors 2912 are coupled to rear caster pivot arms 2920 to detect a tipping behavior of the wheelchair. However, a trigger or sensor can take any form and be arranged in any manner to detect a tipping behavior of the wheelchair and need not be coupled to a rear caster. The trigger or sensor 2912 senses when conditions exist that may cause the vehicle to exhibit a tipping behavior and causes the locking assembly 2914 to engage when a tipping behavior is sensed to prevent any further tipping behavior.

[00124] Figure 30 schematically illustrates a mid-wheel drive wheelchair 3000 that includes a tip or stability control system that comprises at least one tip sensor or trigger 3012 and at least one stabilizing member or assembly 2914. Front caster pivot arms 3008 are coupled to drive assemblies 3006 by a link 3009. The wheelchair 3000 is similar to the wheelchair 2900 of Figure 29, but the front caster pivot arm 3008 comprises an upper link 3011a and a lower link 3011b.

[00125] The upper link 3011a is pivotally coupled to a caster support member 3013 at a pivotal connection 3015 and is pivotally connected to the frame 3001 at a pivotal connection 3017. The lower link 3011b is pivotally coupled to the caster support member 3013 at a pivotal connection 3019 and is pivotally connected to the frame 3001 at a pivotal connection 3021.

[00126] The caster support member 3013 may be any structure that couples the links 3011a, 3011b to be coupled to a front caster 3036. The links 3011a, 3011b, the frame 3001, and the caster support member 3013 form a four-bar linkage. The pivotal connections 3015, 3017, 3019, 3021 can be positioned at a wide variety of different locations on the frame 3001 and the caster support member 3013 and the length of the links 3011a, 3011b can be selected to define the motion of the caster 3036 as the front caster pivot arm 3008 is pivoted. In the example illustrated by Figure 30, the front caster pivot arm 3008 retracts the front caster 3008 or pivots the wheel of the front caster toward the frame as the pivot arm 3008 is lifted and extends the front caster or pivots the wheel of the front caster away from the frame as the front caster pivot arm is lowered.

[00127] Each drive assembly 3006 is mounted to the frame 3001 by a pivot arm 3020 at a drive assembly pivot axis 3022. The pivot arm 3020 extends forward and downward from the motor drive to the drive assembly pivot axis 3022. The pivot axis 3022 of the drive assembly pivot arm 3020 is below the drive wheel axis of rotation 3030 and is in front of the front caster pivot arms 3008. As such, the front caster pivot arm 3008 and the drive assembly pivot arm 3020 are in a crossed configuration. The front caster pivot arm 3008 and the drive assembly pivot arm 3020 may be bent or may be offset to accommodate the crossed configuration.

[00128] The link 3009 is connected to the drive assembly pivot arm 3020 at a pivotal connection 3050 and is connected to the front caster pivot arm 3008 at a pivotal connection 3052. The link 3009 can be connected to the upper link 3011a, or the lower link 3011b. Any link 3009 that transfers at least some portion of motion in at least one direction of the drive assembly 3006 to the front caster pivot arm 3008 can be used.

[00129] When the drive assembly 3006 is accelerated the drive assembly 3006 may pivot and pull the link 3909. Pulling on the link 3009 causes the front caster pivot arm 3008 to move upward or urges the pivot arm upward.

[00130] Rear casters 3010 are coupled to the frame 3001 such that the rear casters are moveable upwardly and downwardly with respect to the frame. A stabilizing assembly 3014 is coupled to each front caster pivot arm 3008 and to the frame 3001, to the drive assembly 3006 and the frame 3001 and/or to the link 3009 and the frame 3001. One or more triggers or sensors 3012 are coupled to rear caster pivot arms 3020 to detect a tipping behavior of the wheelchair. However, a trigger or sensor can take any form and can be arranged in any manner to detect a tipping behavior of the wheelchair and need not be coupled to a rear caster. The trigger or sensor 3012 senses when conditions exist that may cause the vehicle to exhibit a tipping behavior and causes the locking assembly 3014 to engage when a tipping behavior is sensed to inhibit further tipping behavior.

[00131] Figure 31 schematically illustrates a mid-wheel drive wheelchair 3100 that includes a tip or stability control system that comprises at least one tip sensor or trigger 3112 and at least one stabilizing or assembly 3114. Front caster pivot arms 3108 are coupled to drive assemblies 3106 by a link 3109. The wheelchair 3100 is similar to the wheelchair 2800 of Figure 28, but the front caster pivot arm 3108 and the drive assembly 3106 are pivotally coupled to the frame 3101 at a common pivot axis 3122.

[00132] Each drive assembly 3106 is mounted to the frame 3101 by a pivot arm 3120. The pivot arm 3120 extends forward and downward from the motor drive to the common pivot axis 3122. The pivot axis 3122 is below the drive wheel axis of rotation 3130 and the axis 3132 that the front caster wheel 3136 rotates around.

[00133] The link 3109 is connected to the drive assembly pivot arm 3120 at a pivotal connection 3150 and is connected to the front caster pivot arm 3108 at a pivotal connection 3152. The link 3109 can take a wide variety of different forms. For example, the link may be rigid, flexible, or extendible in length. Any link 3109 that transfers at least some portion of motion in at least one direction of the drive assembly 3106 to the front caster pivot arm 3108 can be used.

[00134] When the drive assembly 3106 is accelerated, the drive assembly 3106 may pivot and pull on the link 3109. Pulling on the link 3109 causes the front caster pivot arm 3108 to move upward or urges the pivot arm upward.

[00135] Rear casters 3110 are coupled to the frame 3101 such that the rear casters are moveable upwardly and downwardly with respect to the frame. A stabilizing assembly 3114 is coupled to each front caster pivot arm 3108 and to the frame 3101, to the drive assembly 3106 and the frame 3101 and/or to the link 3109 and the frame 3101. However, the stabilizing assembly can take any form and be positioned in any manner that allows the stabilizing assembly to inhibit tipping behavior. One or more triggers or sensors 3112 are coupled to the rear caster pivot arms 3110 to detect a tipping behavior of the wheelchair. However, a trigger or sensor can take any form and be arranged in any manner to detect a tipping behavior of the wheelchair and need not be coupled to a rear caster. The trigger or sensor 3112 senses when conditions exist that may cause the vehicle to exhibit a tipping behavior and causes the locking assembly 3114 to engage when a tipping behavior is sensed to prevent any further tipping behavior.

[00136] Figures 32-37 illustrate an example of a mid-wheel drive wheelchair 3200 that includes a control system that comprises sensors or triggers 3212a, 3212b and stabilizing members 3214a, 3214b. The wheelchair 3200 includes a frame 3202, a seat (not shown) is supported by the frame 3202, first and second drive assemblies 3206a, 3206b, first and second front caster pivot arms 3218a, 3218b, first and second front casters 3208a, 3208b, first and second rear caster pivot arms 3220a, 3220b, and first and second rear casters 3210a, 3210b. A rear caster position sensing arrangement 4400 (see Figures 44-51) communicates a condition of the rear caster pivot arms 3220a, 3220b to both of the sensors or triggers 3212a, 3212b.

[00137] Referring to Figure 32, the illustrated frame 3202 is made from sheetmetal panels, but can be constructed in any manner that is suitable for the application of the wheelchair 3200. The illustrated frame 3202 defines an interior space 3203 for batteries (not shown), wiring (not shown), and other wheelchair components.

[00138] Referring to Figures 32 and 33, each drive assembly 3206a, 3206b includes a drive wheel 3215 and a motor or drive 3217 that propels the drive wheel 3215. The drive 3217 may comprise a motor/gear box combination, a brushless, gearless motor, or any other known arrangement for driving the drive wheel 3215. The drive 3717 is coupled to the frame 3202 at a pivotal connection 3219. The pivotal connection 3219 is disposed below a drive axis 3221 of the drive wheel 3215 when the wheelchair 3200 is resting on flat, level ground. Figures 38-41 show the wheelchair 3200 with many of the components removed to more clearly illustrate the drive 3217, the front pivot caster pivot arm 3218a, the rear caster pivot arm 3220a, and the stabilizing member 3214a mounted on one side of the frame 3202. The component mounting on the other side of the frame 3202 may be a mirror image, and is therefore not described in detail.

[00139] Referring to Figure 39, each front caster pivot arm 3218a, 3218b includes upper and lower links 3223a, 3223b that define a four bar linkage. The upper link 3223a is pivotally coupled to a caster support member 3211 at a pivotal connection 3280 and is fixedly connected to the drive 3217. The lower link 3223b is pivotally coupled to the caster support member 3211 at a pivotal connection 3282 and is pivotally connected to the frame 3202 at a pivotal connection 3283. The drive 3217, the links 3223a, 3223b, the frame 3202, and the caster support member 3211 form a four-bar linkage.

[00140] The front caster 3208a is coupled to the caster support member 3211. The front caster pivot arms 3218a, 3218b are independently pivotable upwardly and downwardly on the opposite sides of the frame to move the front casters 3208a, 3208b upwardly and downwardly with respect to the frame 3202.

[00141] Referring to Figures 33 and 39, when the drive assembly 3206a is accelerated such that the moment arm generated by drive wheel 3215 is greater then all

other moment arms around pivot axis 3219, the drive assembly 3206 pivots about pivot axis 3219 to move the front caster pivot arm 3218 upward or urges the pivot arm upward as indicated by arrow 3301. Resulting upward tendencies of the front caster 3208a helps the wheelchair 3200 to traverse obstacles. In the exemplary embodiment, the drive assembly 3206b operates in the same manner or a similar manner to move or urge the front caster 3208b upward.

[00142] Referring to Figures 40-42, the stabilizing member 3214a comprises a hydraulic cylinder with a spring return (see also Figures 5 and 6). The stabilizing member 3214a includes a housing 4004, and a rod 4008. In this embodiment, the sensor or trigger 3212a is a portion of a button 4006 that extends from the stabilizing member 3214a. The position of the button 4006 determines the state of the stabilizing member 3214a. In the wheelchair 3200, when the button 4006 is depressed, the rod 4008 may move into and out of the housing 4004 to extend and shorten the length of the stabilizing member 3214a. When the button 4006 is extended, the rod 4008 may move out of the housing 4004 to extend the length of the stabilizing member 3214a, but is prevented from moving into the housing 4004 to shorten the length of the stabilizing member. When the button 4006 is in the depressed position, the movement of the fluid in the stabilizing member 3214a when the rod extends and retracts provides a damping effect. When the button 4006 is extended, the stabilizing member damps downward movement of the front caster. In the wheelchair 3200, a spring return (See Figure 6) biases or returns the rod 4008 to an extended position to bias the front caster toward contact with the ground.

[00143] Referring to Figures 40 -42, the stabilizing member 3214a is pivotally connected to the frame 3202 at a pivotal connection 4020 and to the drive assembly/front caster pivot arm at a pivotal connection 4022. When the button 4006 is extended, the stabilizing member 3214a can extend to allow the front caster to move downward with respect to the frame 3202, but cannot retract to prevent upward movement of the front caster with respect to the frame. When the button 4006 is depressed, the stabilizing member 3214a allows the front caster to move upward and downward with respect to the frame.

[00144] Referring to Figure 42, the pivotal connection 4020 may comprise a ball 4030 and socket 4032 connection. The ball 4030 is mounted to the rod 4008. The socket 4032 is connected to the frame 3202. If the pivotal connection 4020 is made before the pivotal connection 4022, the ball 4030 can be turned in the socket 4032 to facilitate alignment required to make the pivotal connection 4022. If the pivotal connection 4022 is made before the connection 4022, the ball 4030 can be assembled in the socket 4022, regardless of the orientation of the ball with respect to the socket. As a result, assembly of the stabilizing members 3214a, 3214b to the frame and to the drive assembly/front caster pivot arm is made easier.

[00145] In the embodiment of wheelchair 3200, optional vibration damping assemblies 4250 are coupled to the button 4006 of each stabilizing member 3214a, 3214b to prevent vibration of the button 4006 in the rod 4008. Figure 42 illustrates a vibration damping assembly 4250 that includes a ball portion for a ball and socket connection. Figure 43 illustrates a vibration damping assembly 4250 where the ball is omitted and the stabilizing member 3214a is connected to the frame by a conventional pivotal coupling or the ball is coupled to the stabilizing member at another location. The vibration damping includes a housing 4212, a trigger extension member 4214, and a biasing member 4216, such as a spring or other resilient member. The housing 4212 is disposed on the end of the rod 4008. In the embodiment illustrated by Figure 42, the ball 4030 is defined as part of the housing 4212. In the embodiment illustrated by Figure 43, the housing 4212 does not include a ball portion. The trigger extension member 4214 is disposed in the housing 4212 in engagement with the control rod 4210. The biasing member 4216 biases the trigger extension member 4214 against the button 4006. The biasing member 4216 applies a preload to the button 4006 to inhibit vibration of the button 4006 in the rod 4008. The force applied by the biasing member 4216 is small enough that the biasing member 4216 does not depress the control rod 4210 to a point where the stabilizing member 3214a, 3214 changes state (i.e. from an engaged state to a disengaged state).

[00146] Referring to Figures 36 and 37, each rear caster pivot arm 3220a, 3220b is independently coupled to the frame 3202 at a pivotal connection 3602a, 3602b. Each rear caster 3210a, 3210b is coupled to a rear caster pivot arm 3220a, 3220b, such that

each rear caster can rotate around a substantially vertical axis. Figures 44-50 illustrates the rear caster position sensing arrangement 4400 and a rear caster suspension 4402 of the wheelchair 3200. The rear caster suspension 4402 includes the rear caster pivot arms 3220a, 3220b, the rear casters 3210a, 3210b, and biasing members 4408a, 4408b, such as a spring or other resilient member. A stop member 4413a, 4413b is attached to each pivot arm. The stop members 4413a, 4413b rotate with the pivot arms 3220a, 3220b. The rear caster position sensing arrangement 4400 includes a pair of spaced apart trigger engagement assemblies 4420a, 4420b that are coupled to the wheelchair frame at pivotal connections 4422a, 4422b. In the illustrated embodiment, each rear caster position sensing arrangement includes an elongated member 4423 pivotally coupled to the frame, and an adjustable trigger engagement member 4425 connected to the elongated member 4423.

[00147] The adjustment between the engagement member 4425 and the elongated member 4423 allows the amount of rotation of the rear caster position sensing arrangement that causes engagement of the stabilizing members to be adjusted. Referring to Figures 45 and 46, the distance that the engagement members 4325 extend from the elongated members 4323 is adjustable. The distance that the engagement members 4325 extend from the elongated members determines the amount of rotation of the rear caster position sensing arrangement that is required to cause the stabilizing assemblies to engage and disengage. In another embodiment, the trigger engagement assemblies 4420a, 4420b are replaced with the single piece trigger engagement members.

[00148] In the embodiment illustrated by Figures 44-50, the pivotal connections 4422a, 4422b are coaxial with pivotal connections 3602a, 3602b of the rear caster pivot arms. In another embodiment, the pivotal connections 4422a, 4422b are offset form the pivotal connections 3602a, 3602b. The elongated members 4420a, 4420b are connected together by a bar 4424. Referring to Figures 45 and 51, the bar 4424 is disposed between first and second engagement surfaces 4430, 4432 of the stop members 4413a, 4413b. The bar 4424 selectively engages the stop members 4413a, 4413b to limit relative movement between the first and second rear caster pivot arms

3220a, 3320b. The biasing members 4408a, 4408b are interposed between the rear caster pivot arms 3220a, 3220b and the elongated members 4420a, 4420b.

[00149] The rear caster position sensing arrangement 4400 operates to cause both sensors or triggers to place both of the stabilizing members 3214a, 3214b in the engaged and disengaged states based on the positions of the rear caster pivot arms 3320a, 3320b. Figure 49 illustrates rear caster pivot arm 3320a in a normal operating position. Rear caster pivot arm 3320b is not visible in Figure 49, because it is in the same, normal operating position, as rear caster pivot arm 3320a. When (shown schematically in Figure 49)one or both of the rear caster pivot arms 3320a, 3320b are in normal operating positions relative to the frame 3202, one or more of the biasing members 4408a, 4408b hold both of the trigger engagement assemblies 4420a, 4420b against both of the sensors or triggers 3212a, 3212b, such that both stabilizing members are disengaged. The elongated members 4420a, 4420b position the bar 4424 with respect to the stop members 4413a, 4413b. As long as force applied by one or more of the biasing members 4408a, 4408b is sufficient to maintain the elongated members 4420a, 4420b against the sensors or triggers 3212a, 3212b, the position of the bar 4424 is fixed. When there is a gap between the bar 4424 and a stop member 4413a, 4413b, the rear caster pivot arms 3320a, 3320b are free to move upwardly and downwardly with respect to one another.

[00150] In Figures 44 and 49, the stop members 4413a, 4413b are in contact with the bar 24. When the stop members 4413a, 4413b engage the bar 4424, further relative movement of the of the rear caster pivot arms is inhibited by the bar 4424. In the position shown by Figures 44 and 49, the bar 4424 is in engagement with the engagement surface 4430 of both of the stop members. As a result, downward movement of only one pivot arm 3320a, 3320b (with the other pivot arm remains in the position illustrated by Figures 44 and 49) is inhibited by the bar 4024 and the biasing member 4408a or 4408b of the other pivot arm. However, both pivot arms 3320a, 3320b can pivot downward together relative to the frame. Referring to Figure 49A, downward movement indicated by arrow 4902 of both pivot arms 3220a (3220b is hidden) allows the rear caster position sensing arrangement 4400 to move away from both of the triggers 3212a, 3212b, allows the triggers to extend, and causes both of the locking members 3214 to disengage. As such, the rear caster pivot arms 3320a, 3320b

move independently from the position shown in Figure 49 in the direction of arrow 4904. Movement of each rear caster pivot arms 3320a, 3320b from the position shown in Figure 49 in the direction indicated by arrow 4902 is dependent on the other rear caster pivot arm also moving in the direction indicated by arrow 4902.

[00151] Referring to Figure 41, each stabilizing member 3214a (3214b not shown) is coupled to the frame 3202 and the front caster pivot arms 3218a, 3218b. The stabilizing members 3214a (3214b not shown) allow upward and downward movement of the first and second front caster pivot arms 3218a, 3218b relative to the frame 3202 when first and second rear casters 3210a, 3210b are each in a normal position relative to the frame shown in Figure 41, because the rear caster position sensing arrangement 4400 engages both of the triggers 3212a, 3212b of the stabilizing members 3214a, 3214b in this position.

[00152] When the wheelchair 3200 exhibits a tipping behavior, the frame 3202 of the wheelchair is pitched slightly forward toward the front casters 3208a, 3208b. As a result, both of the rear casters 3320a, 3320b move downward relative to the frame 3202 to maintain contact with the ground. This downward movement moves the rear caster position sensing arrangement 4400 away from the triggers 3212a, 3212b, allows the triggers to move to the extended position and causes the stabilizing assemblies 3214a, 3214b to engage. In an exemplary embodiment, the stabilizing assemblies 3214a, 3214b engage to lock the first and second front casters 3208a, 3208b against upward movement relative to the frame, but allow the front casters to move downward when engaged. The stabilizing assemblies 3214a, 3214b may be configured in any manner that inhibits further tipping of the wheelchair frame when the stabilizing members are engaged. In another embodiment, the stabilizing assemblies 3214a, 3214b lock the front caster pivot arms against both upward and downward movement with respect to the pivot arm when engaged. When one or more of the rear casters return to a normal operating position relative to the frame, the triggers are depressed again to disengage and allow upward and downward movement of the front casters relative to the frame. In the wheelchair 3200, the rear caster position sensing arrangement is configured such that movement of one of the rear casters to a normal operating position moves the other rear caster up as well.

[00153] While the present invention has been illustrated by the description of embodiments thereof, and while the embodiments have been described in considerable detail, it is not the intention of the applicant to restrict or in any way limit the scope of the appended claims to such detail. Additional advantages and modifications will readily appear to those skilled in the art. For example, pivotal connections can be made of any number of structures including bearing assemblies, pins, nuts and bolts, and frictionless sleeve assemblies. Additionally, springs or shock absorbers can be added between pivoting and non-pivoting components to limit, dampen, or somewhat resist the pivotal motions of these components. Also, a brake-disc locking mechanism could be integrated into any of the pivotal connections and serve as a stabilizing member or assembly that locks components coupled to the pivotal connection from rotation when actuated and freely allows pivotal motion about the connection when not actuated. The scope of the claims should not be limited by the preferred embodiments set forth in the examples, but should be given the broadest interpretation consistent with the Description as a whole.

The embodiments of the present invention for which an exclusive property or privilege is claimed are defined as follows:

1. A wheelchair suspension comprising:

a frame;

a drive assembly pivotally mounted to the frame at a first pivot axis that is below an axis of rotation of a drive axle of the drive assembly;

at least one front caster pivot arm pivotally mounted to the frame and coupled to the drive assembly;

a front caster coupled to the at least one caster pivot arm;

at least one rear caster coupled to the frame;

a stabilizing assembly comprising a fluid cylinder, wherein the fluid cylinder locks the front caster pivot arm to prevent upward pivotal movement of the front caster pivot arm with respect to the frame when the wheelchair exhibits a tipping behavior;

wherein torque applied by the drive assembly urges the front caster upward with respect to a support surface.

2. The wheelchair suspension of claim 1 wherein the at least one caster pivot arm is pivotally mounted to the frame at a second pivot axis and the second pivot axis is below the axis of rotation of the drive axle of the drive assembly.

3. The wheelchair suspension of claim 1 wherein the first pivot axis is below the entire drive assembly.

4. The wheelchair suspension of claim 1 wherein the tipping behavior comprises relative downward movement of the at least one rear caster with respect to the frame.

5. The wheelchair suspension of claim 1 wherein the suspension includes two rear casters independently suspended from the frame and wherein tipping behavior is relative downward movement of both rear casters with respect to the frame.

6. The wheelchair suspension of claim 5 wherein the fluid cylinder remains unlocked to allow upward and downward movement of the front caster relative to the frame when only one rear caster moves downward with respect to the frame; and

CA 2911675 2017-11-20

wherein the fluid cylinder locks to inhibit upward movement of the front caster when both of the rear casters move downward relative to the frame.

7. The wheelchair suspension of claim 5 wherein the fluid cylinder locks the front caster against upward movement relative to the frame when both of the rear casters move downward relative to the frame; and

wherein the fluid cylinder remains unlocked to allow upward movement of the front caster relative to the frame when one or more of the rear casters move upward relative to the frame.

8. A wheelchair suspension comprising:

a frame;

a drive assembly coupled to the frame;

at least one front caster pivot arm pivotally coupled to the frame at a pivot arm axis;

a front caster coupled to the at least one caster pivot arm, the front caster having an axis of rotation;

at least one rear caster coupled to the frame;

a stabilizing assembly comprising a fluid cylinder, wherein the fluid cylinder locks the front caster pivot arm to prevent upward pivotal movement of the front caster pivot arm with respect to the frame when the wheelchair exhibits a tipping behavior;

wherein the pivot arm axis is below the axis of rotation of the front caster when the wheelchair suspension is on a substantially flat surface;

wherein torque applied by the drive assembly urges the front caster upward with respect to a support surface.

9. The wheelchair suspension of claim 8 wherein the pivot arm axis is below the entire drive assembly.

10. The wheelchair suspension of claim 8 wherein the tipping behavior is relative downward movement of the at least one rear caster with respect to the frame.

11. The wheelchair suspension of claim 8 wherein the suspension includes two rear casters independently suspended from the frame and wherein tipping behavior is relative downward movement of both rear casters with respect to the frame.

CA 2911675 2017-11-20

12. The wheelchair suspension of claim 11 wherein the fluid cylinder remains unlocked to allow upward and downward movement of the front caster relative to the frame when only one rear caster moves downward with respect to the frame; and

wherein the fluid cylinder locks the front caster against upward movement relative to the frame when both of the rear casters move downward relative to the frame.

13. The wheelchair suspension of claim 11 wherein the fluid cylinder locks the front caster against upward movement relative to the frame when both of the rear casters move downward relative to the frame; and

wherein the fluid cylinder remains unlocked to allow upward movement of the front caster relative to the frame when one or more of the rear casters move upward relative to the frame.

14. A wheelchair suspension comprising:

a frame;

a drive assembly coupled to the frame;

a front caster;

a pair of pivot arms pivotally coupled to the frame at first and second pivot arm axes that are below the entire drive assembly and pivotally coupled to the front caster to define a four bar linkage;

at least one rear caster coupled to the frame;

a stabilizing assembly comprising a fluid cylinder, wherein the fluid cylinder locks the pair of pivot arms to prevent upward pivotal movement of the pair of pivot arms with respect to the frame when the wheelchair exhibits a tipping behavior;

wherein the drive assembly is coupled to the pair of pivot arms such that torque applied by the drive assembly urges the front caster upward with respect to a support surface.

15. The wheelchair suspension of claim 14 wherein the tipping behavior is relative downward movement of the at least one rear caster with respect to the frame.

16. The wheelchair suspension of claim 14 wherein the suspension includes two rear casters independently suspended from the frame and wherein tipping behavior is relative downward movement of both rear casters with respect to the frame.

17. The wheelchair suspension of claim 16 wherein the fluid cylinder remains unlocked to allow upward and downward movement of the front caster relative to the frame when only one rear caster moves downward with respect to the frame; and

wherein the fluid cylinder locks the front caster against upward movement relative to the frame when both of the rear casters move downward relative to the frame.

18. The wheelchair suspension of claim 16 wherein the fluid cylinder locks the front caster against upward movement relative to the frame when both of the rear casters move downward relative to the frame; and

wherein the fluid cylinder remains unlocked to allow upward movement of the front caster relative to the frame when one or more of the rear casters move upward relative to the frame.

19. A wheelchair comprising:

a frame;

a seat supported by the frame;

a pair of drive wheels supporting the frame;

first and second front casters coupled to the frame;

a first rear caster coupled to the frame such that the first rear caster is moveable upwardly and downwardly with respect to the frame;

a first stop member coupled to the first rear caster;

a second rear caster coupled to the frame such that the second rear caster is moveable upwardly and downwardly with respect to the frame;

a second stop member coupled to the second rear caster;

a linkage coupled to the first stop member and the second stop member, wherein the linkage comprises a bar that is pivotally coupled to the frame, wherein the bar is normally disengaged from the first stop member and the second stop member and is positioned to engage at least one of the first stop member and the second stop member when at least one of the first rear caster and the second rear caster move in a relative downward direction, wherein the linkage permits relative upward and downward movement between the first and second

CA 2911675 2017-11-20

rear casters when the bar is disengaged from at least one of the first and second stop members, and wherein the linkage inhibits relative downward movement of the first rear caster with respect to the second rear caster when the bar is engaged with both the first stop member and the second stop member.

20. The wheelchair of claim 19 wherein the first stop member is fixed to a first rear caster pivot arm that supports the first rear caster.

21. A wheelchair comprising:

a frame;

a seat supported by the frame;

a pair of drive wheels supporting the frame;

first and second front casters coupled to the frame;

a first rear caster coupled to the frame such that the first rear caster is moveable upwardly and downwardly with respect to the frame;

a first stop member coupled to the first rear caster, the first stop member including first and second engagement surfaces;

a second rear caster coupled to the frame such that the second rear caster is moveable upwardly and downwardly with respect to the frame;

a second stop member coupled to the second rear caster, the second stop member including first and second engagement surfaces;

a linkage, wherein the linkage comprises a bar that is pivotally coupled to the frame, wherein the bar is disposed between the first and second engagement surfaces of both the first stop member and the second stop member such that the bar can move between engaging the first and second engagement surfaces of both the first stop member and the second stop member, wherein the engagement between the bar and the first and second engagement surfaces of both the first stop member and the second stop member limits relative upward and downward movement between the first and second rear casters.

22. The wheelchair of claim 21 wherein relative downward movement of the first caster is inhibited with respect to the second caster when the bar engages the first engagement surface of the first stop member and engages the second engagement surface of the second stop member.

CA 2911675 2017-11-20

23. The wheelchair of claim 21 wherein the first and second engagement surfaces of each stop member are spaced apart.

24. A wheelchair suspension stabilizing mechanism comprising:

a stabilizing cylinder including a cylinder housing and a control rod disposed in the cylinder housing, wherein the control rod is positioned to selectively place the stabilizing cylinder in one of a locked state and an unlocked state;

an extension member in engagement with the control rod;

a biasing member that biases the extension member against the control rod to inhibit vibration of the control rod in the cylinder housing.

25. The suspension stabilizing mechanism of claim 24 wherein the biasing member is a spring.

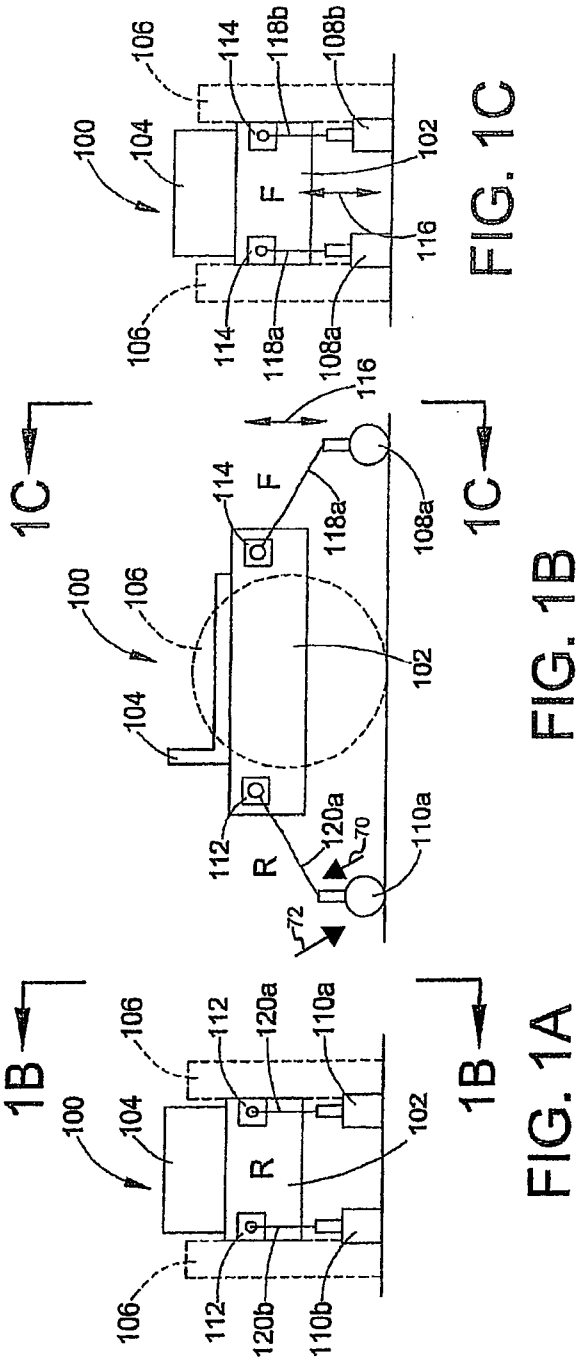

FIG. 1C

FIG. 1B

FIG. 1A

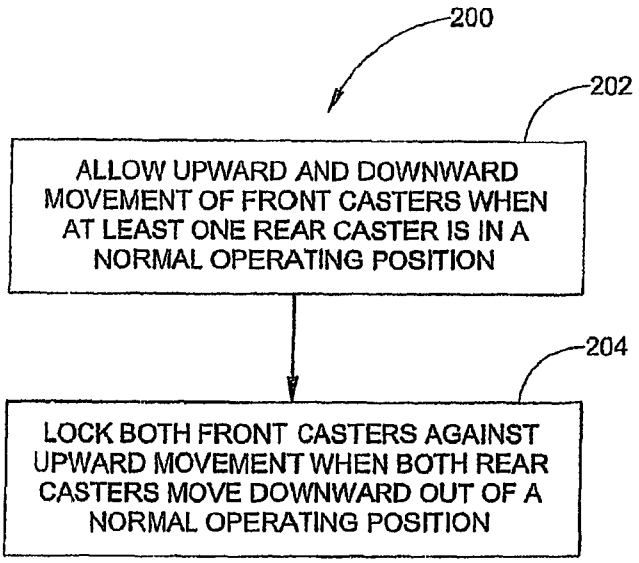
200
202
ALLOW UPWARD AND DOWNWARD MOVEMENT OF FRONT CASTERS WHEN AT LEAST ONE REAR CASTER IS IN A NORMAL OPERATING POSITION
204
LOCK BOTH FRONT CASTERS AGAINST UPWARD MOVEMENT WHEN BOTH REAR CASTERS MOVE DOWNWARD OUT OF A NORMAL OPERATING POSITION

FIG. 2

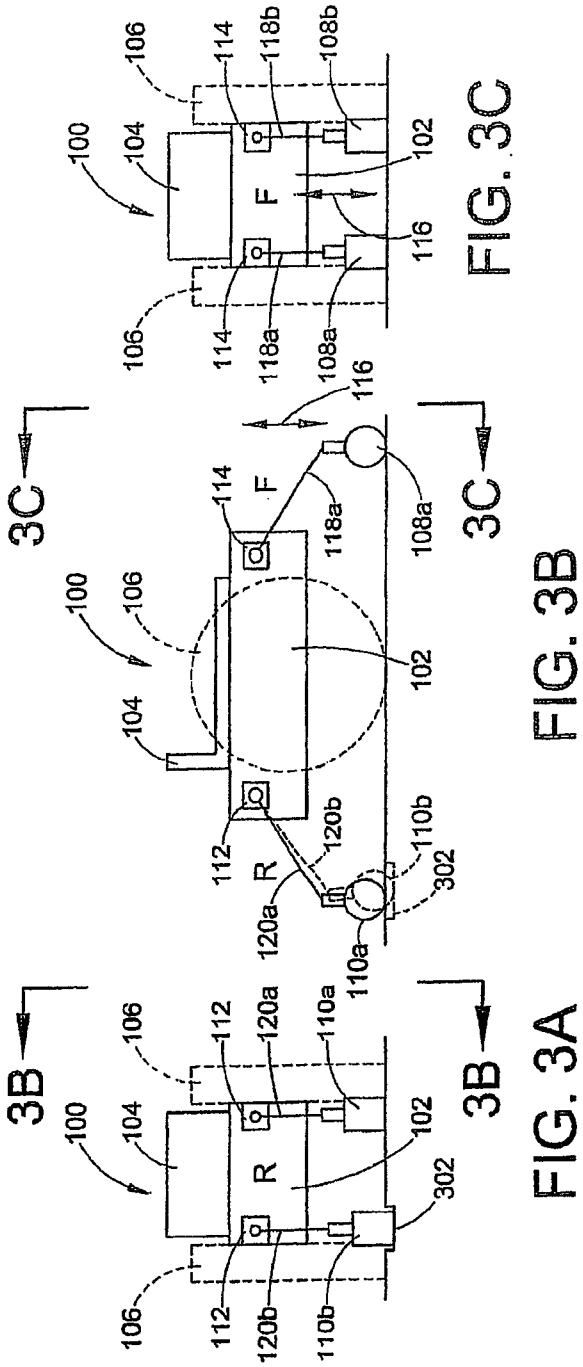

FIG. 3A

FIG. 3B

FIG. 3C

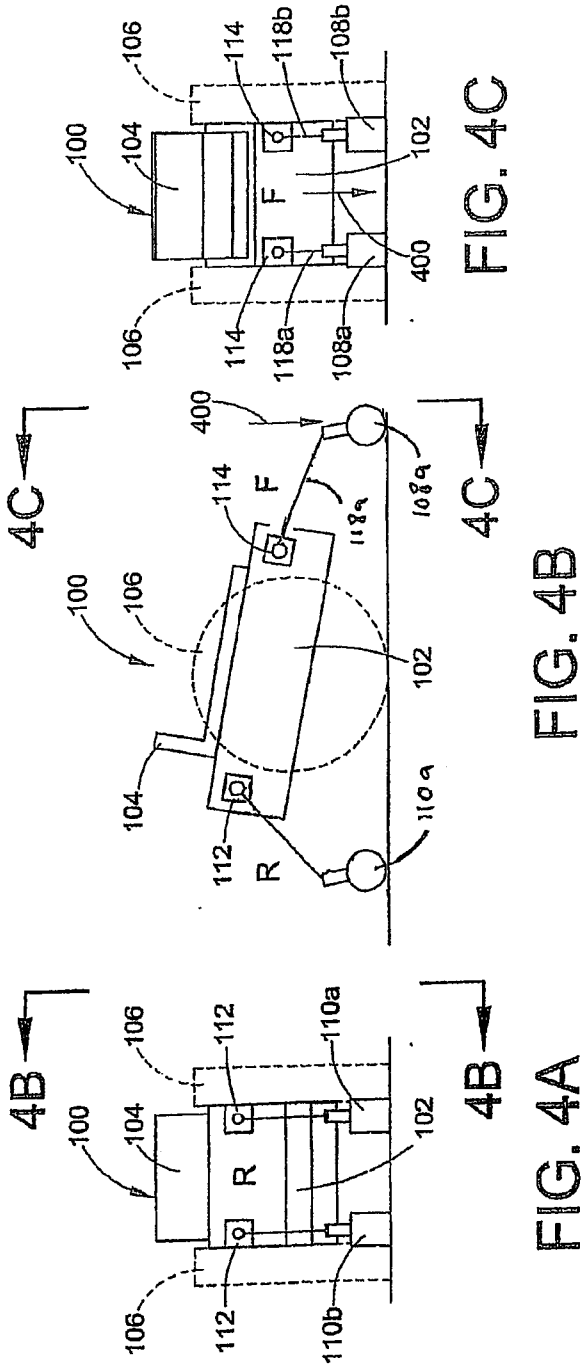

FIG. 4A

FIG. 4B

FIG. 4C

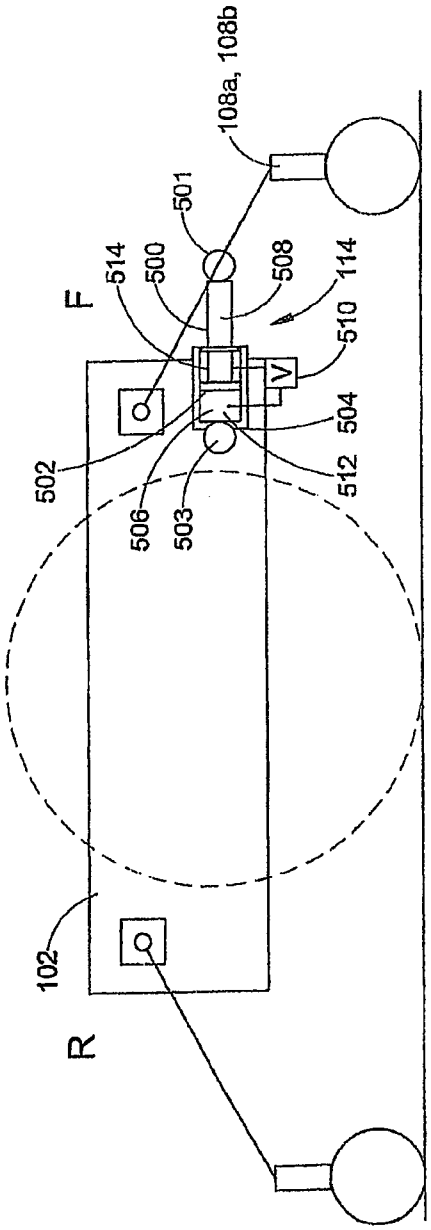

FIG. 5

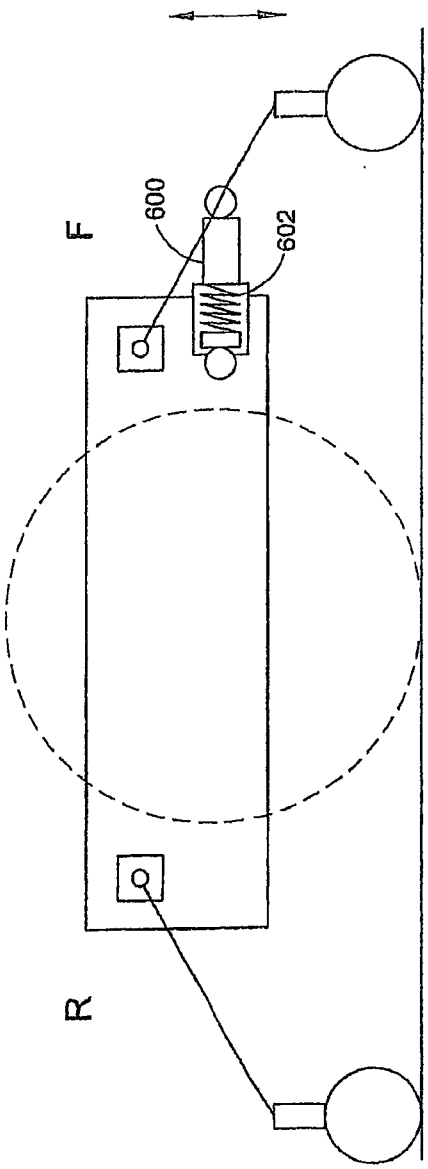

FIG. 6

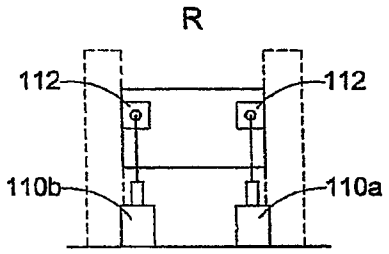

FIG. 7A

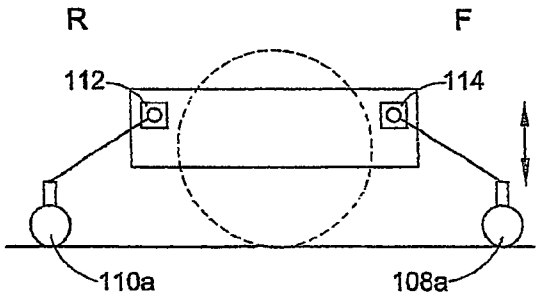

FIG. 7B

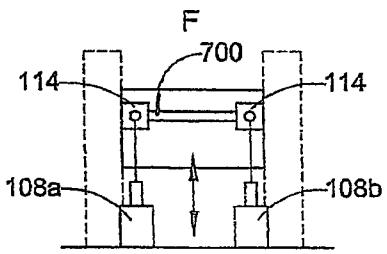

FIG. 7C

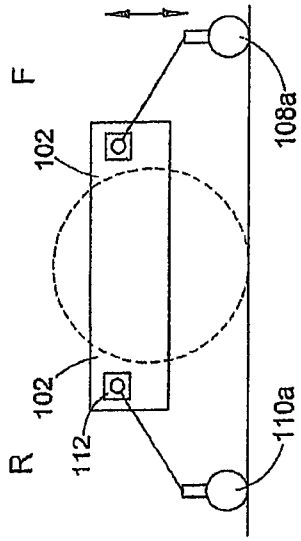

FIG. 8A

FIG. 8B

FIG. 8C

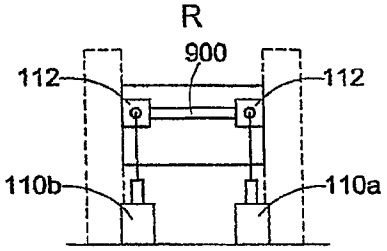

FIG. 9A

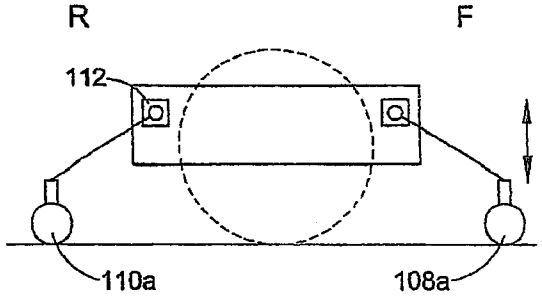

FIG. 9B

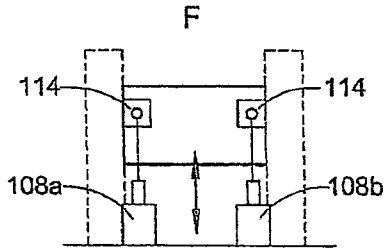

FIG. 9C

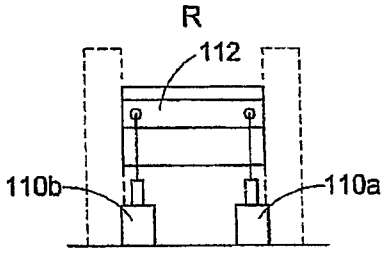

FIG. 10A

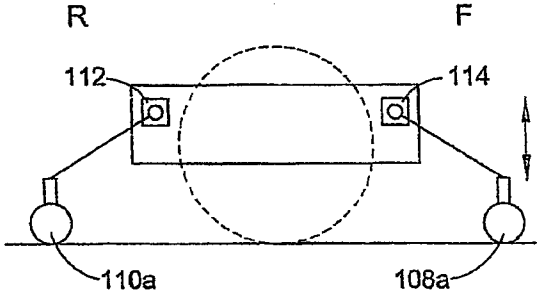

FIG. 10B

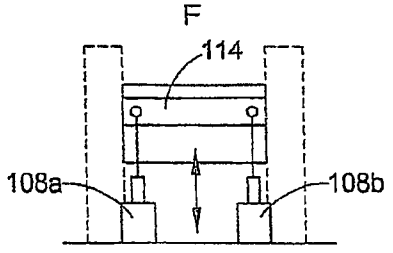

FIG. 10C

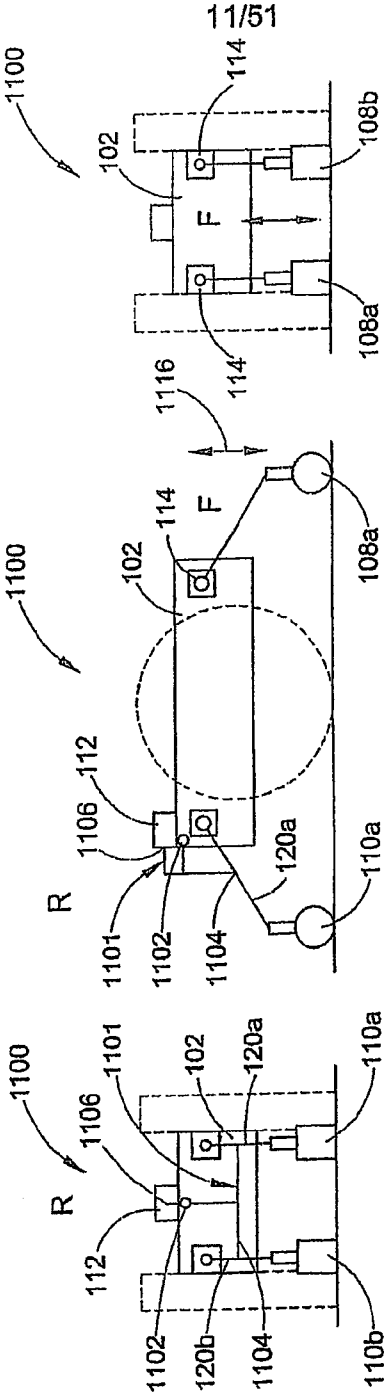

FIG. 11A

FIG. 11B

FIG. 11C

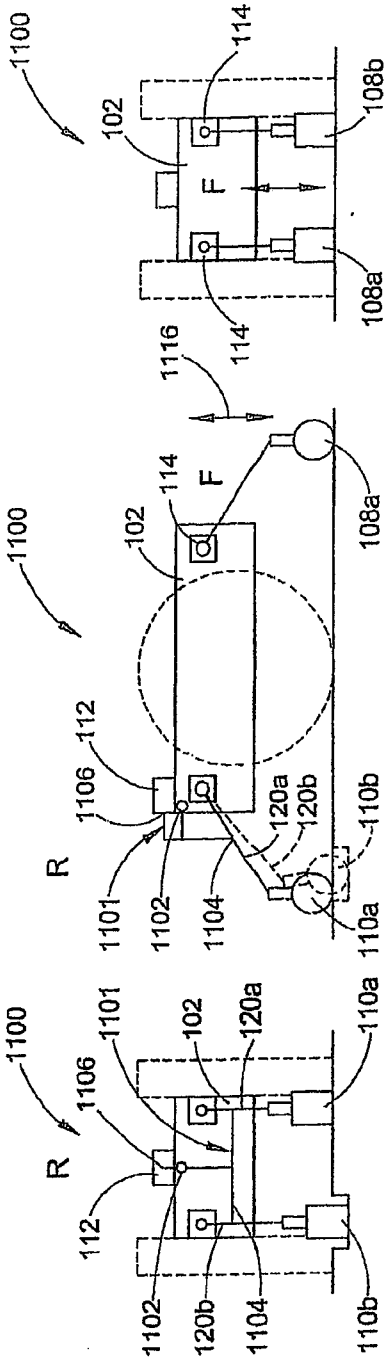

FIG. 12A

FIG. 12B

FIG. 12C

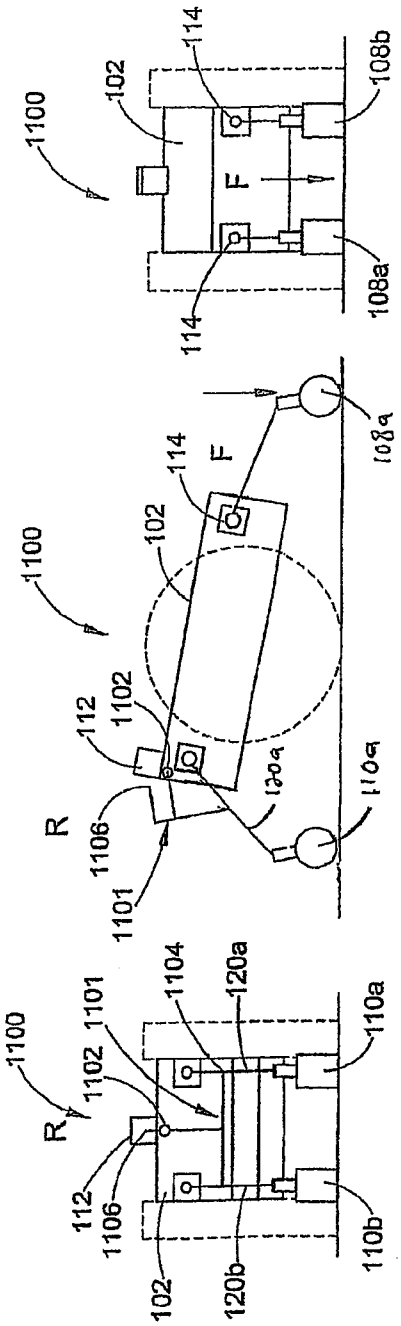

FIG. 13A

FIG. 13B

FIG. 13C

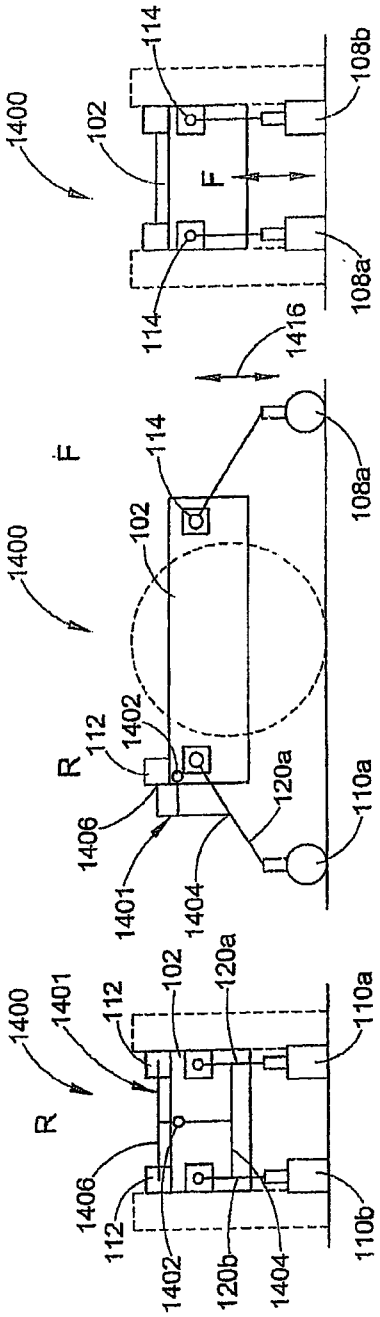

FIG. 14A

FIG. 14B

FIG. 14C

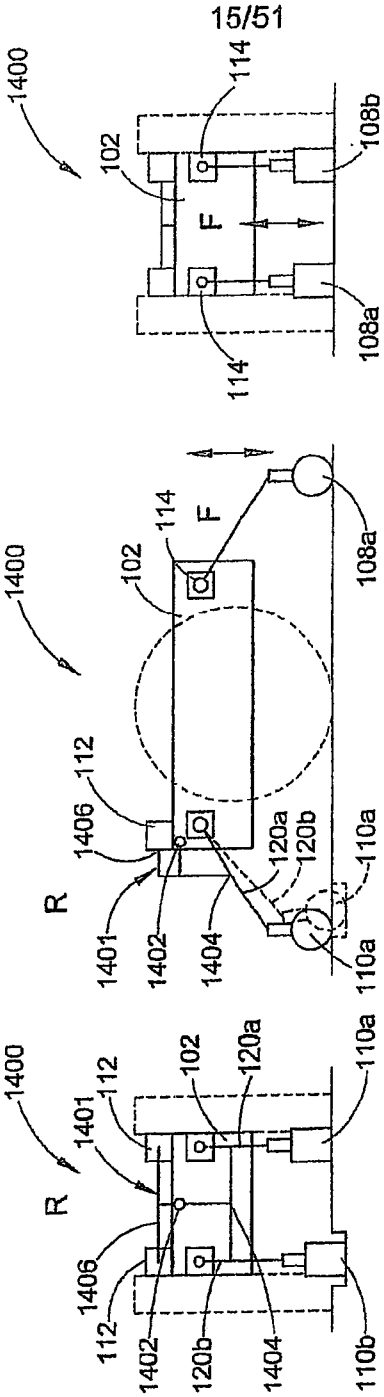

FIG. 15A

FIG. 15B

FIG. 15C

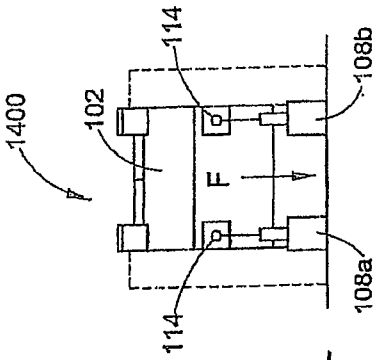

FIG. 16C

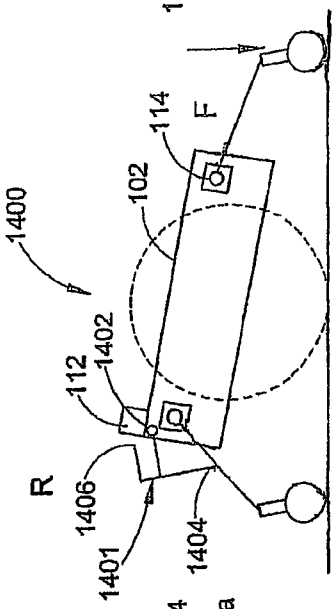

FIG. 16B

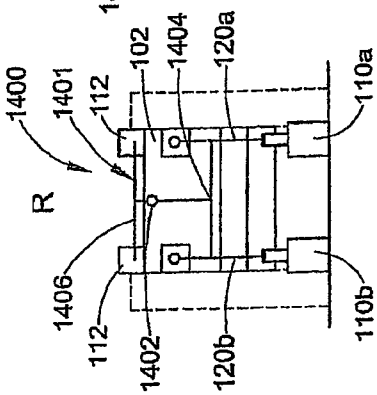

FIG. 16A

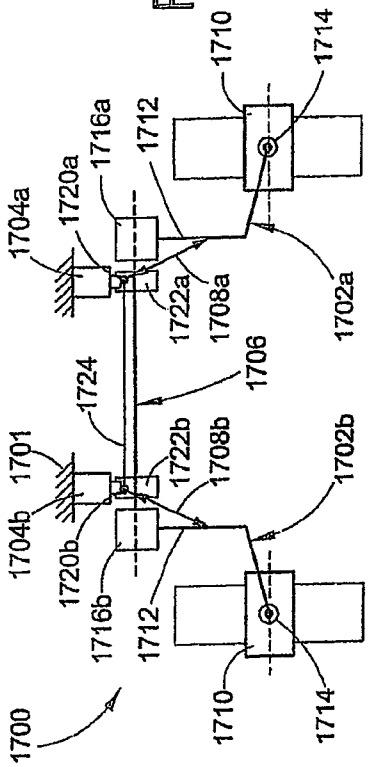

FIG. 17C

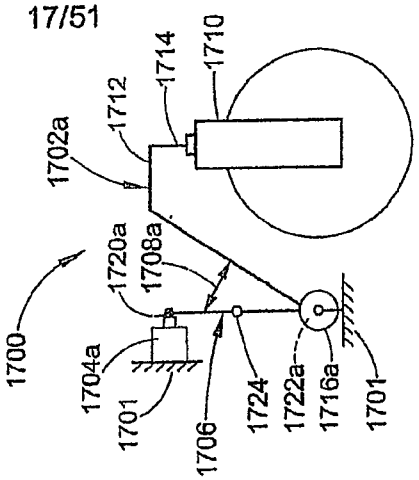

FIG. 17B

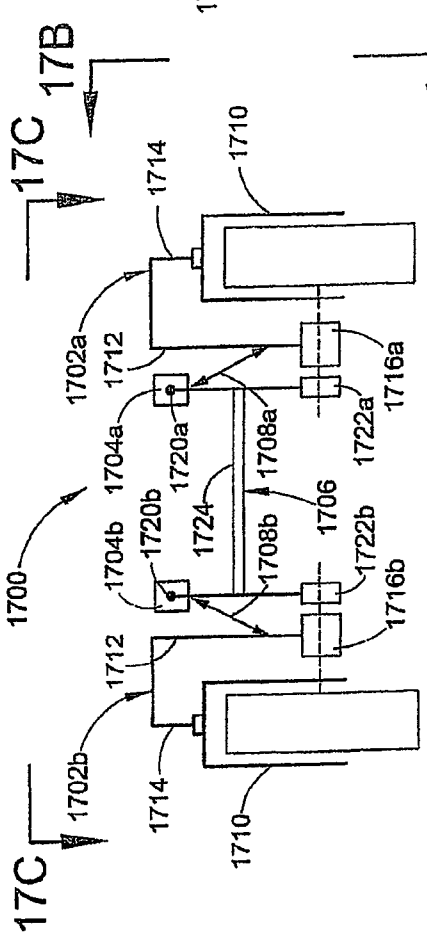

FIG. 17A

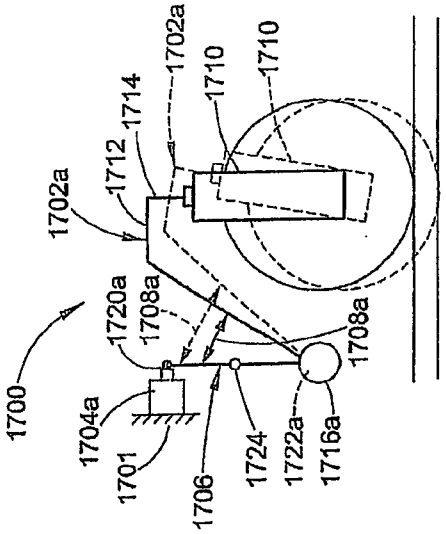

FIG. 18B

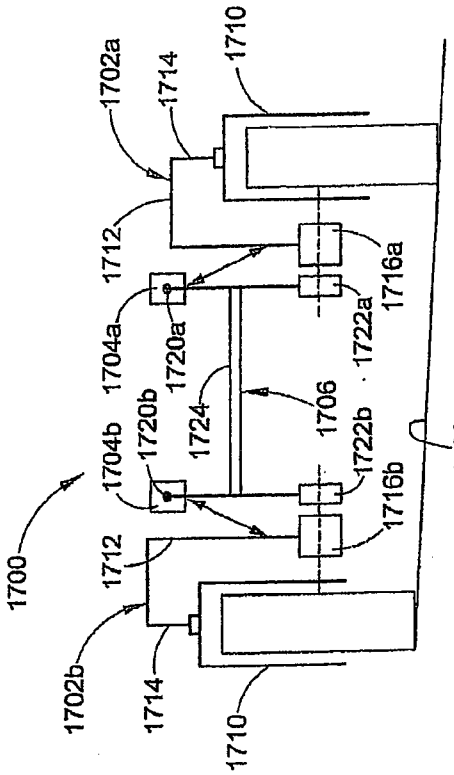

FIG. 18A

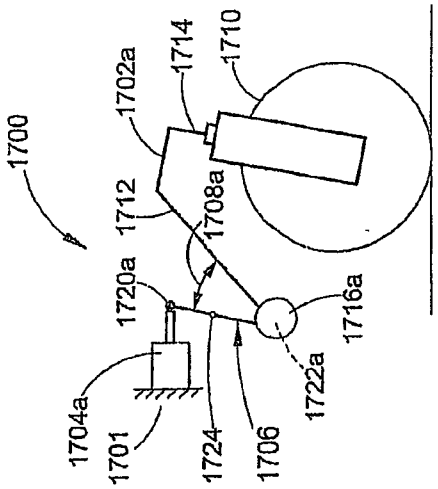

FIG. 19B

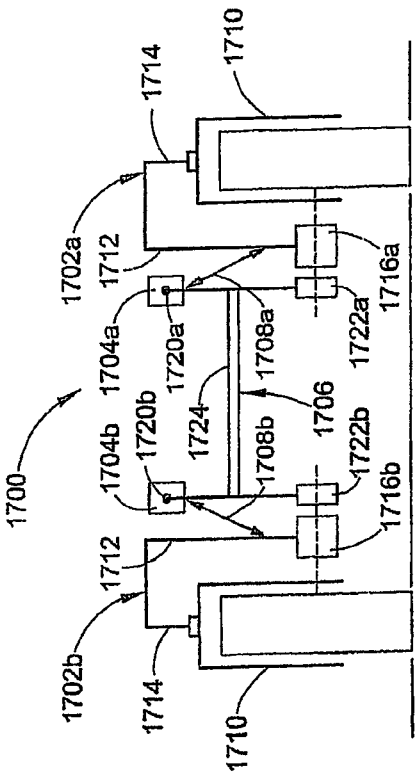

FIG. 19A

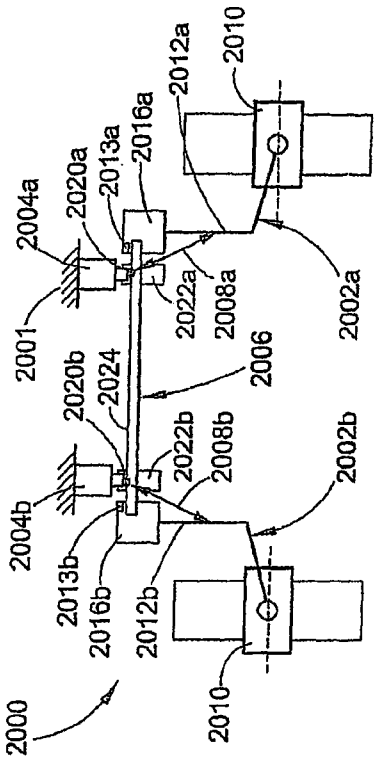

FIG. 20C

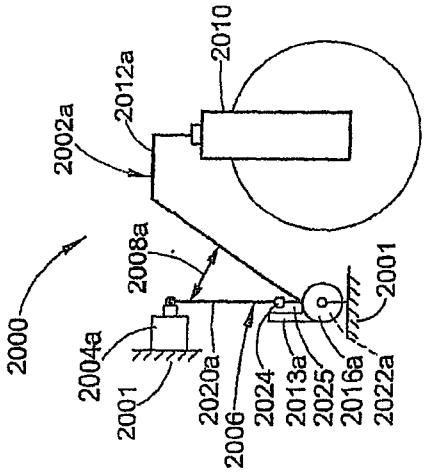

FIG. 20B

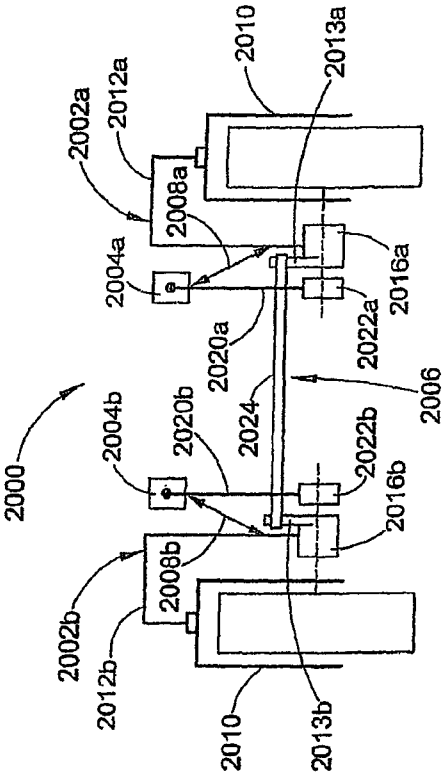

FIG. 20A

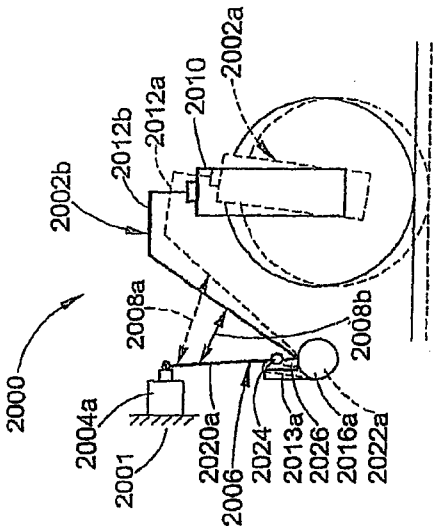

FIG. 21B

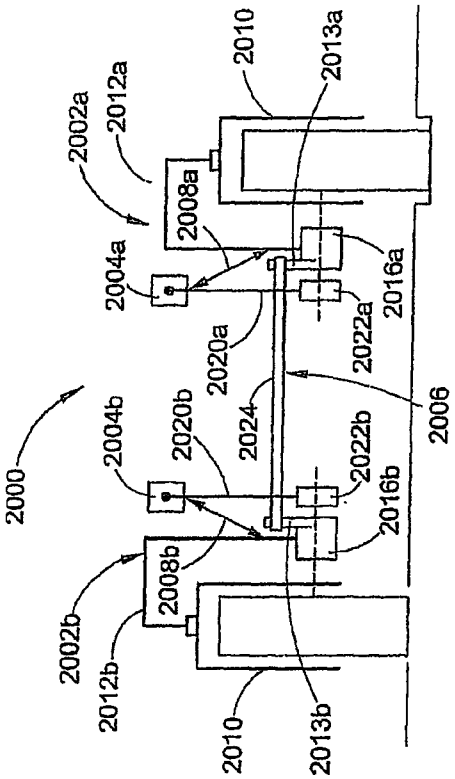

FIG. 21A

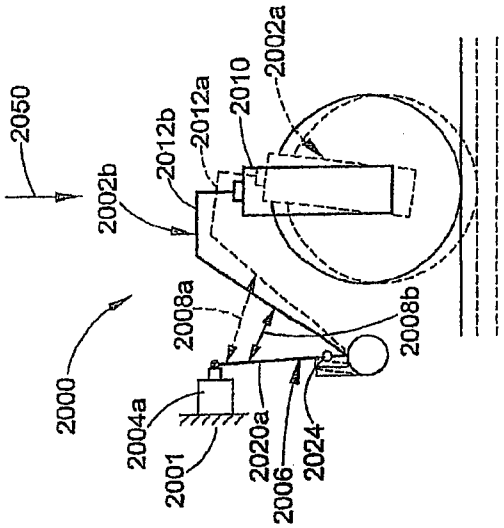

FIG. 22B

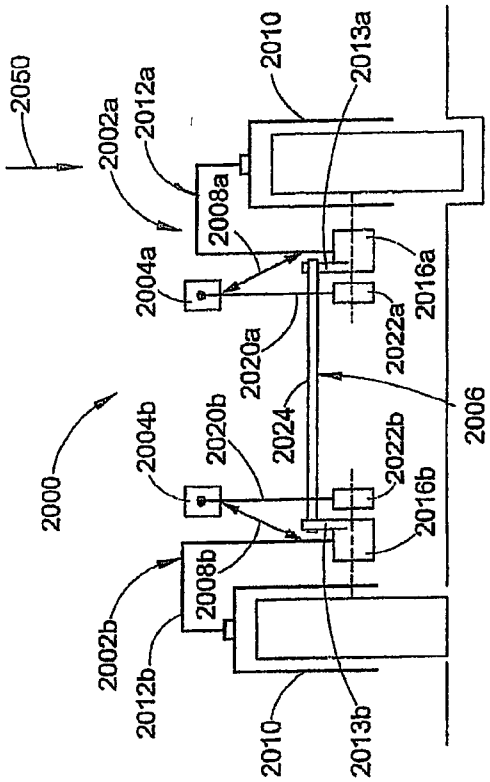

FIG. 22A

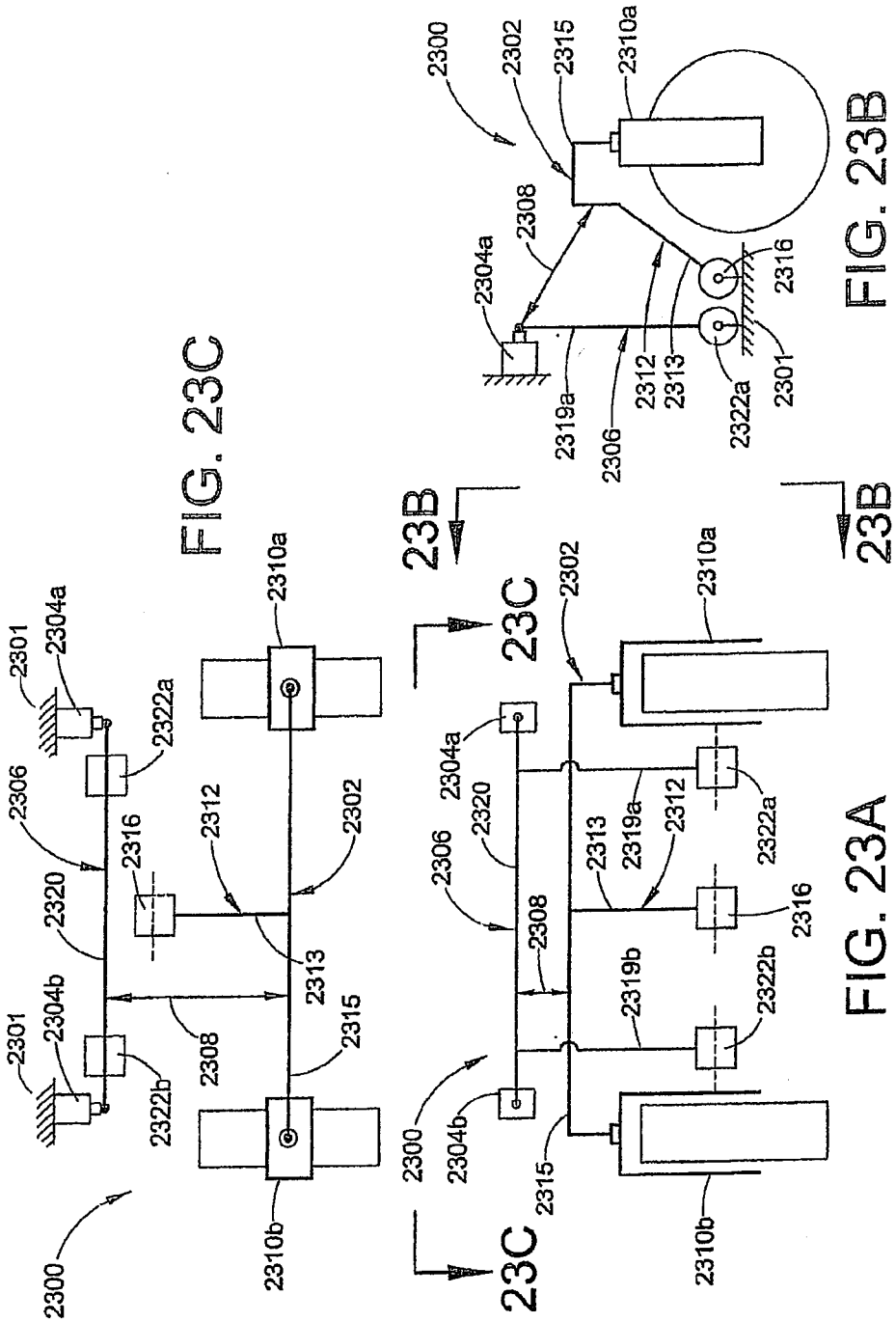

FIG. 23A

FIG. 23B

FIG. 23C

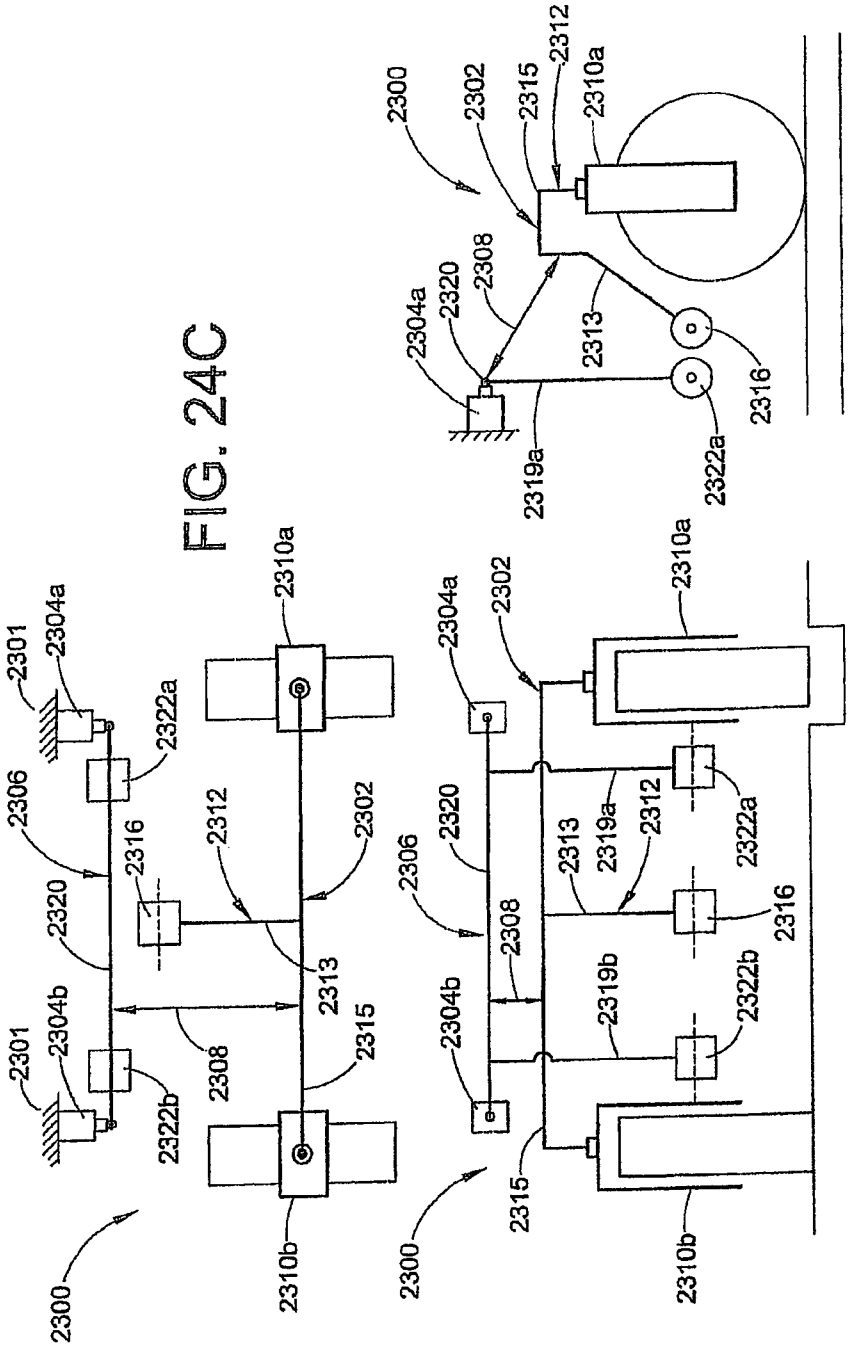

FIG. 24C

FIG. 24A

FIG. 24B

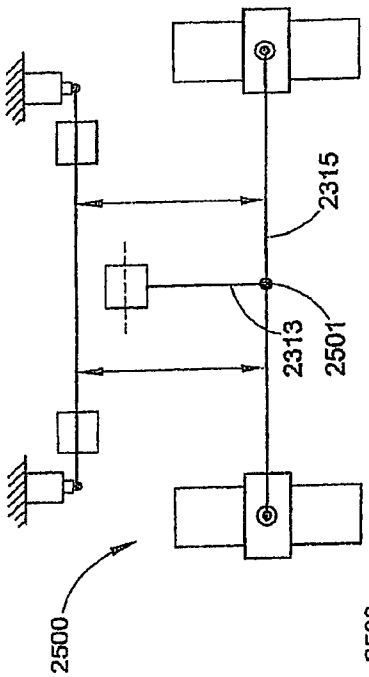

FIG. 25C

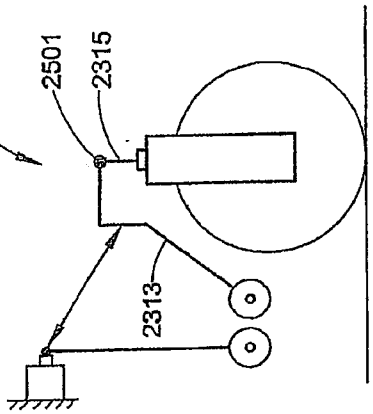

FIG. 25B

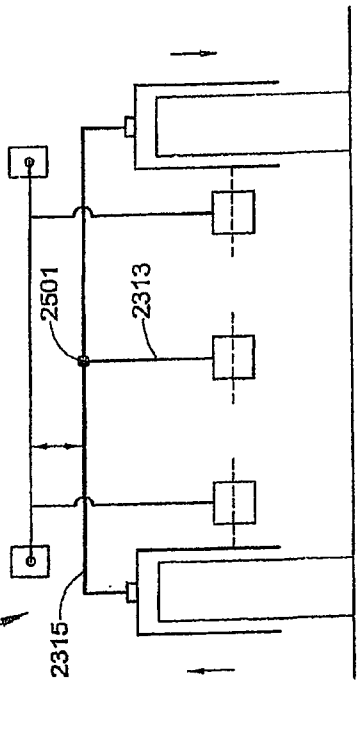

FIG. 25A

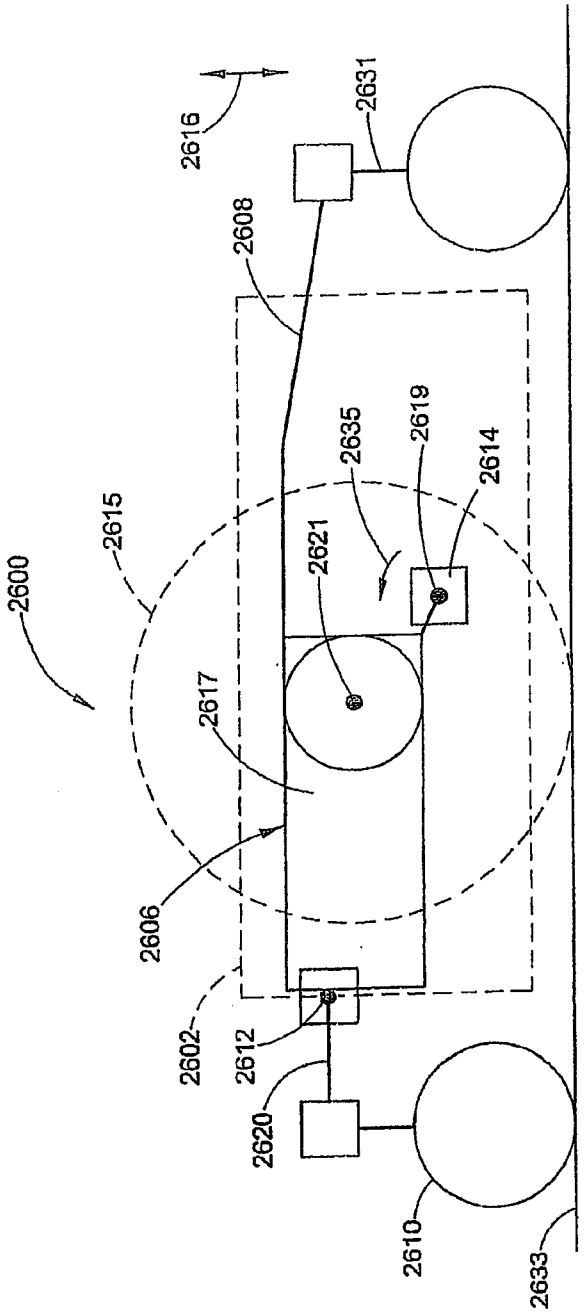
2600
2615
2616
2631
2608
2635
2619
2614
2621
2617
2606
2602
2612
2620
2610
2633

FIG. 26

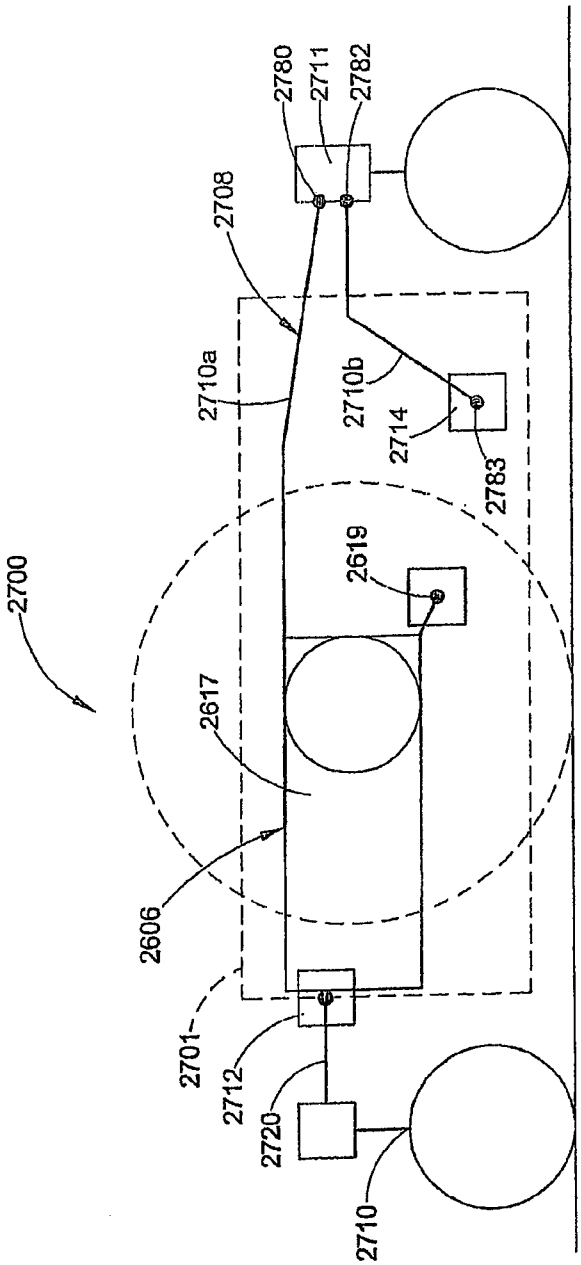
2700
2780
2711
2782
2708
2710a
2710b
2714
2783
2619
2617
2606
2701
2712
2720
2710

FIG. 27

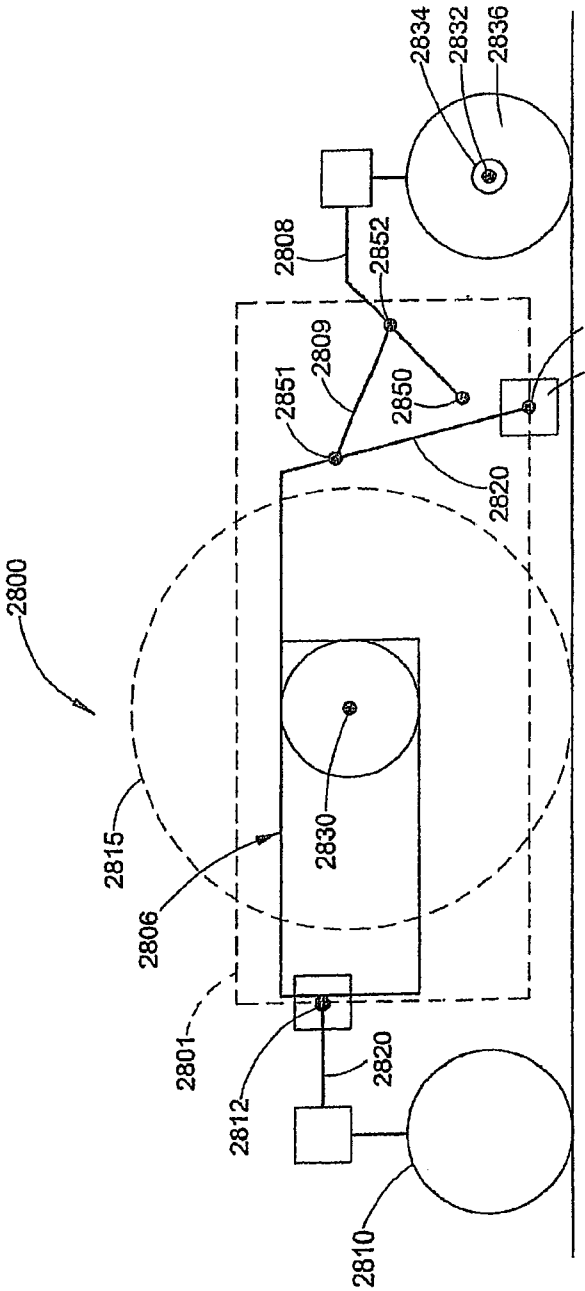
2800
2815
2806
2801
2812
2820
2810
2830
2851
2809
2850
2820
2822
2814
2808
2852
2834
2832
2836

FIG. 28

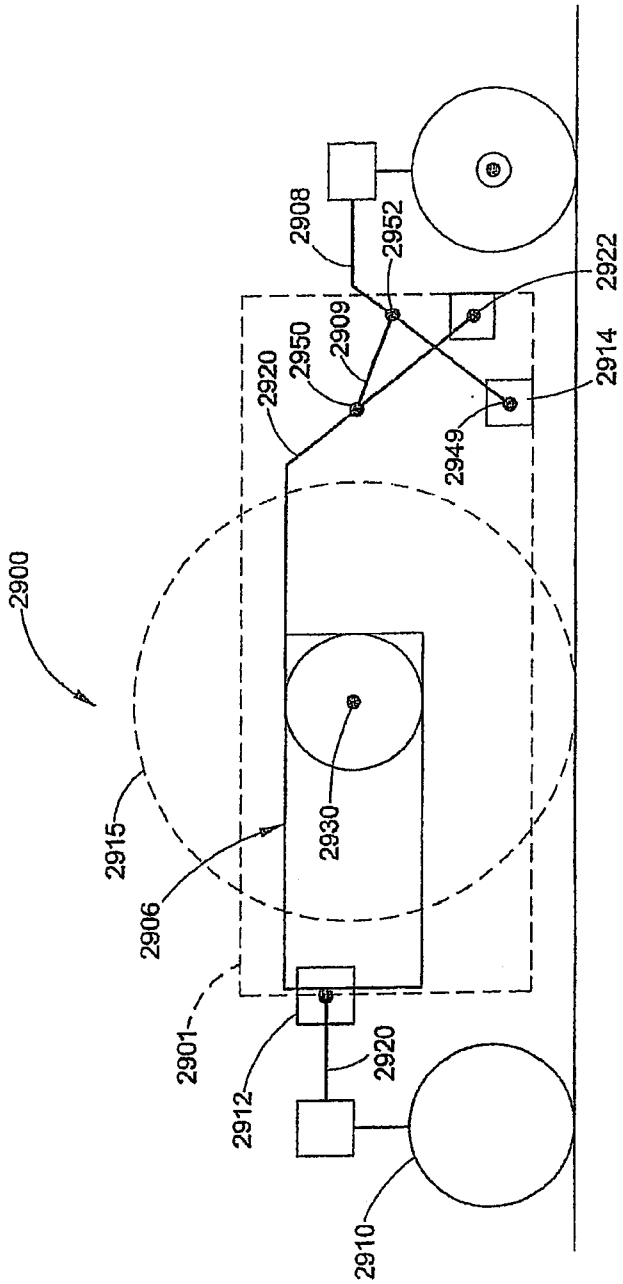
2900
2915
2906
2901
2912
2920
2910
2930
2920
2950
2909
2908
2952
2949
2914
2922

FIG. 29

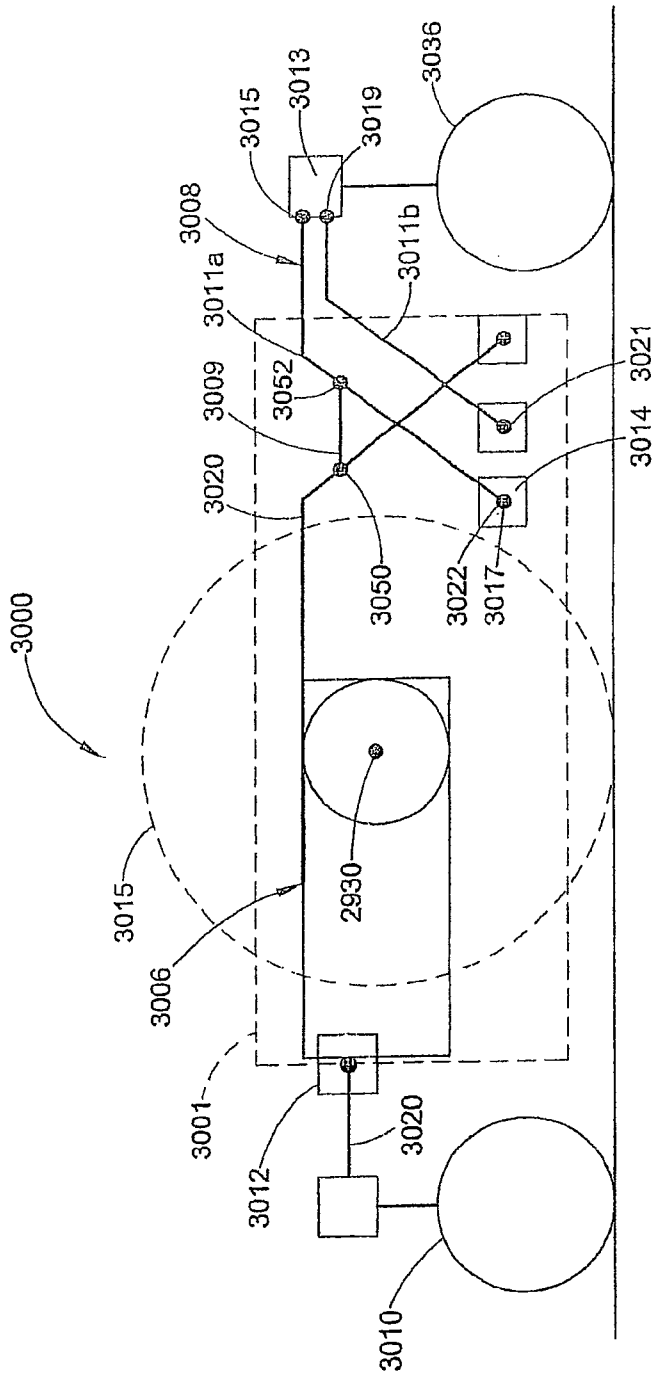
3000
3015
3006
3001
3012
3020
3010
2930
3020
3050
3009
3052
3011a
3008
3015
3013
3019
3036
3011b
3022
3017
3014
3021

FIG. 30

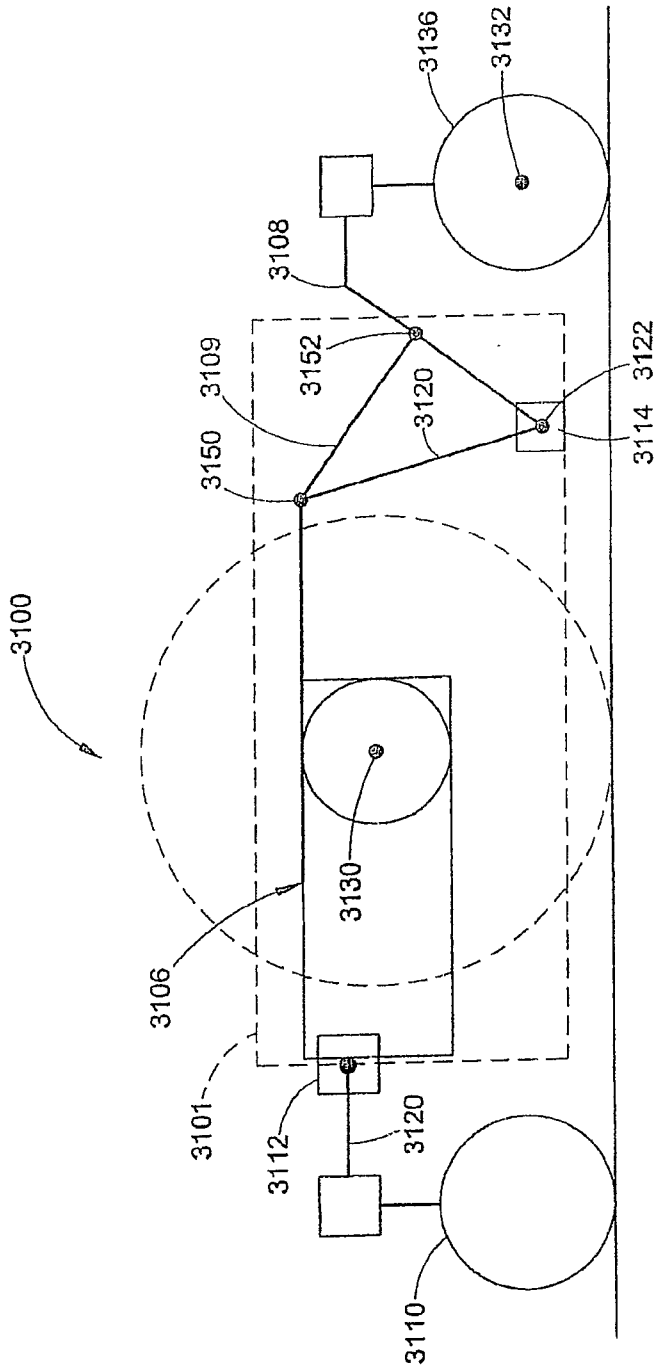
3100
3101
3106
3108
3109
3110
3112
3114
3120
3120
3122
3130
3132
3136
3150
3152

FIG. 31

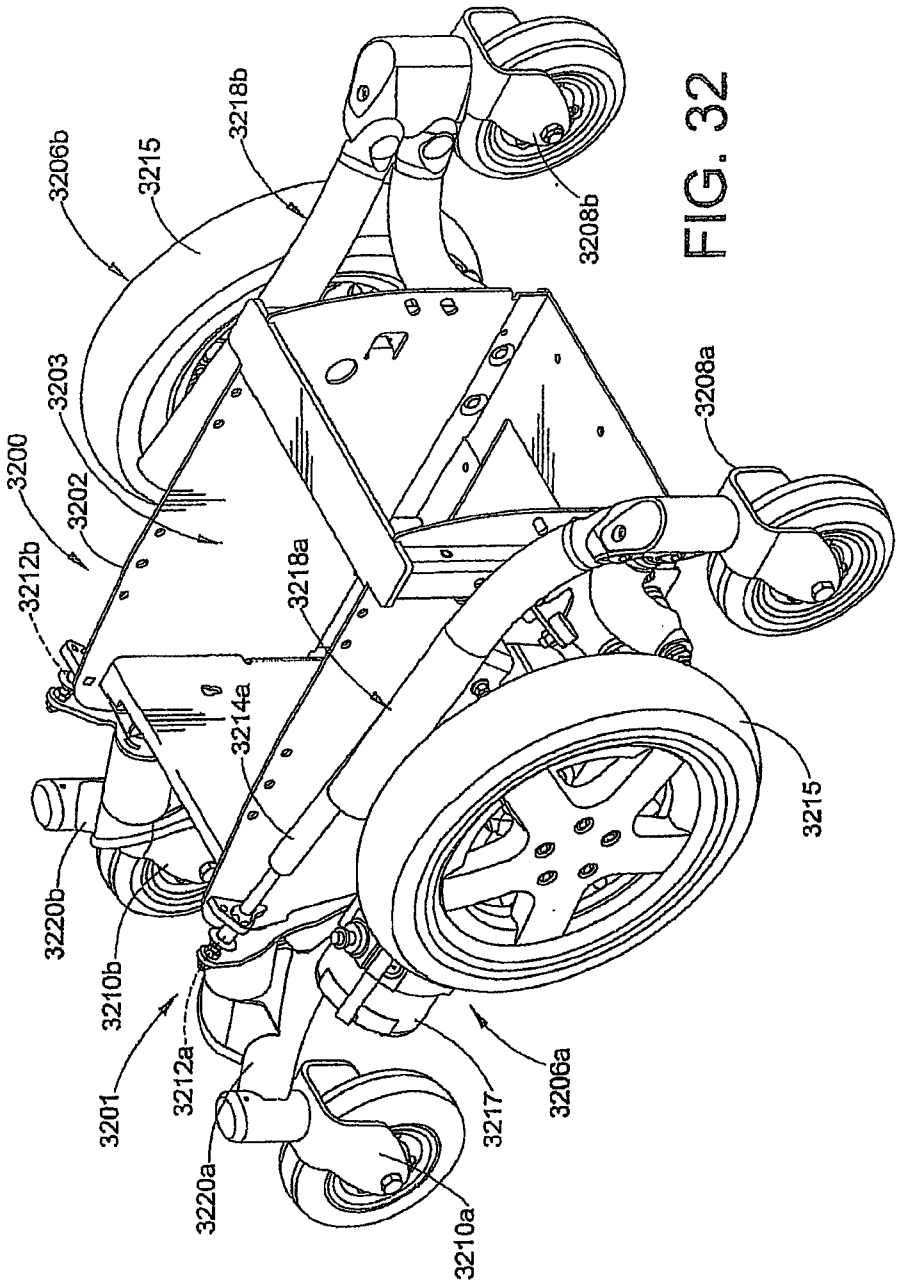
3200
3201
3202
3203
3206a
3206b
3208a
3208b
3210a
3210b
3212a
3212b
3214a
3215
3215
3217
3218a
3218b
3220a
3220b

FIG. 32

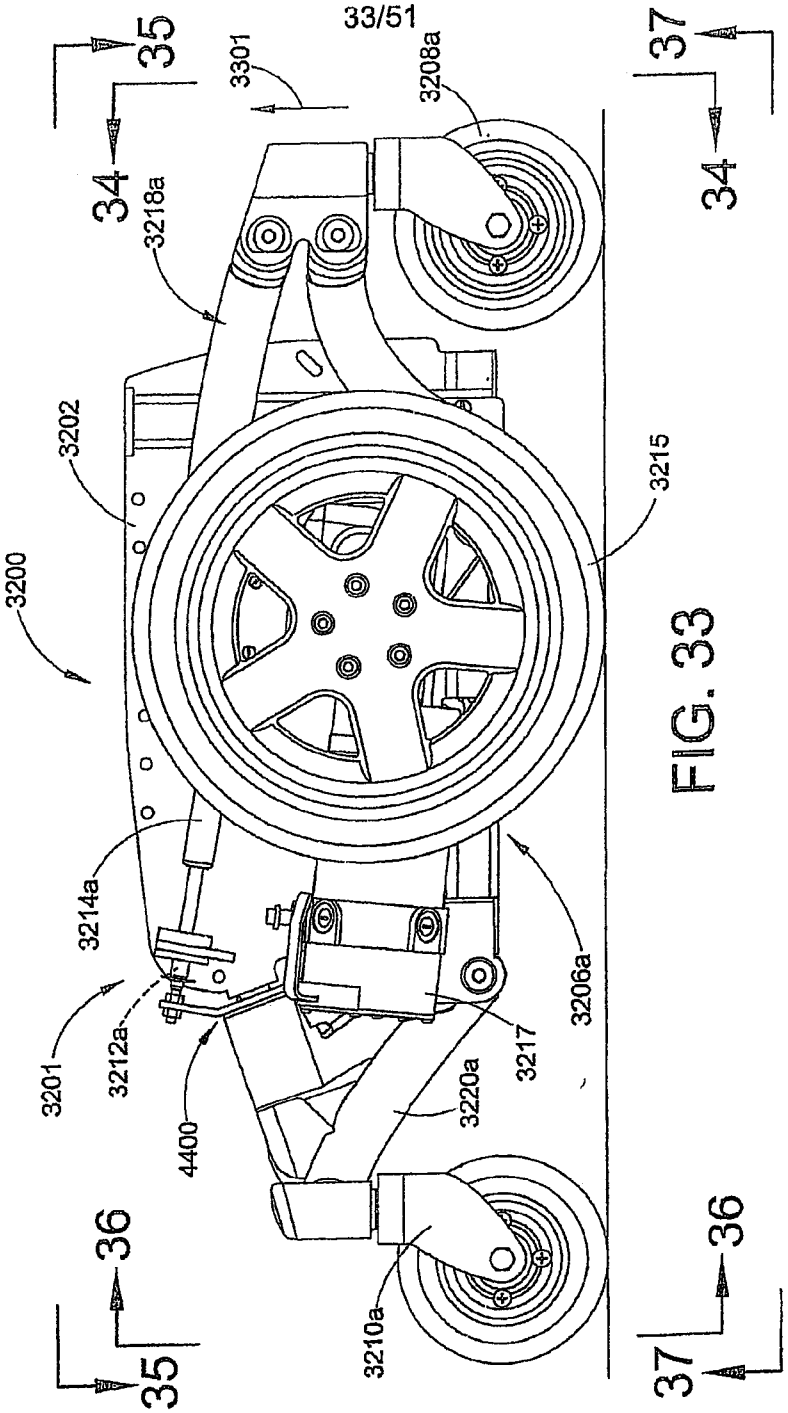
35
34
3301
3208a
37
34
3218a
3202
3215
3200
3214a
3206a
3201
3212a
4400
3217
3220a
36
3210a
35
37
36

FIG. 33

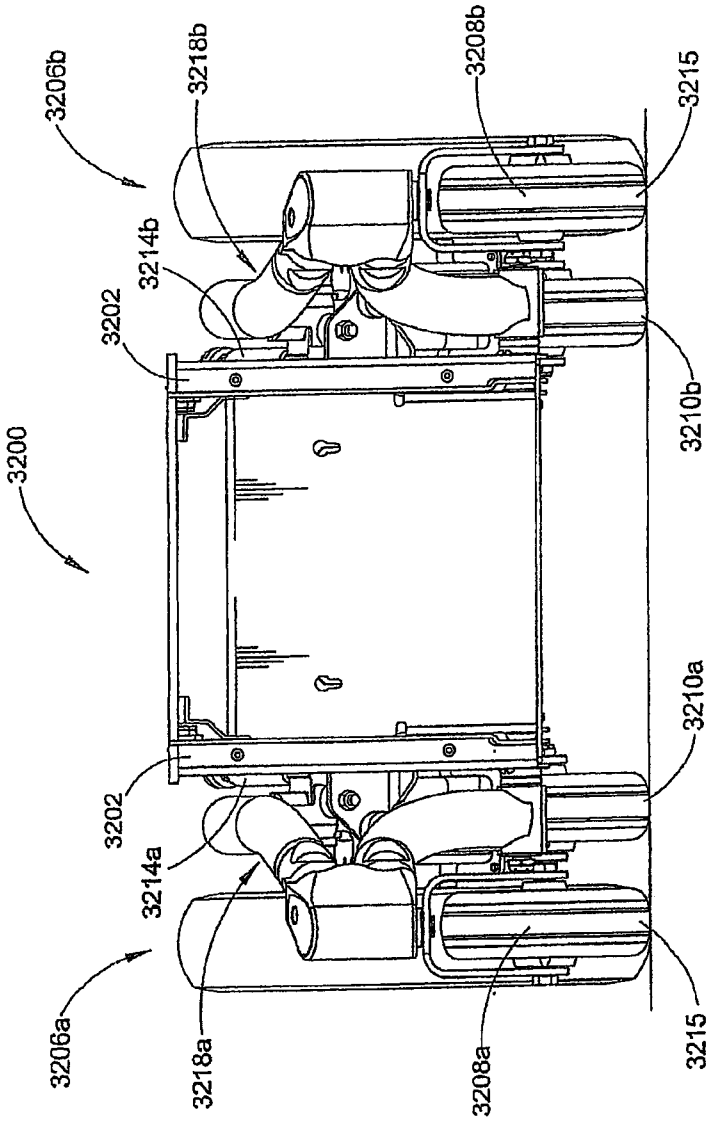
3200
3206b
3218b
3208b
3215
3214b
3202
3210b
3202
3214a
3210a
3206a
3218a
3208a
3215

FIG. 34

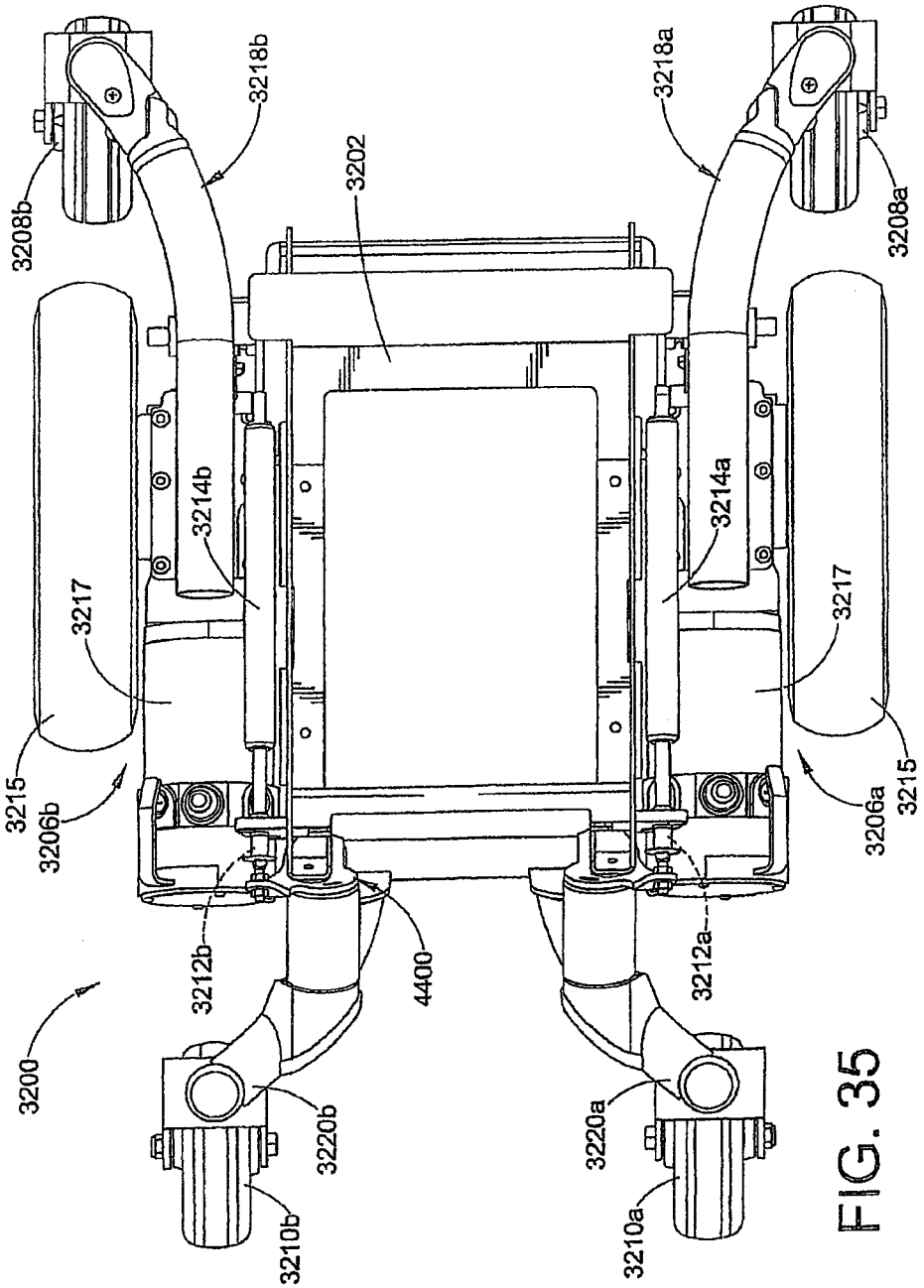
3200
3208b
3218b
3202
3218a
3208a
3214b
3214a
3217
3217
3215
3206b
3206a
3215
3212b
4400
3212a
3220b
3220a
3210b
3210a

FIG. 35

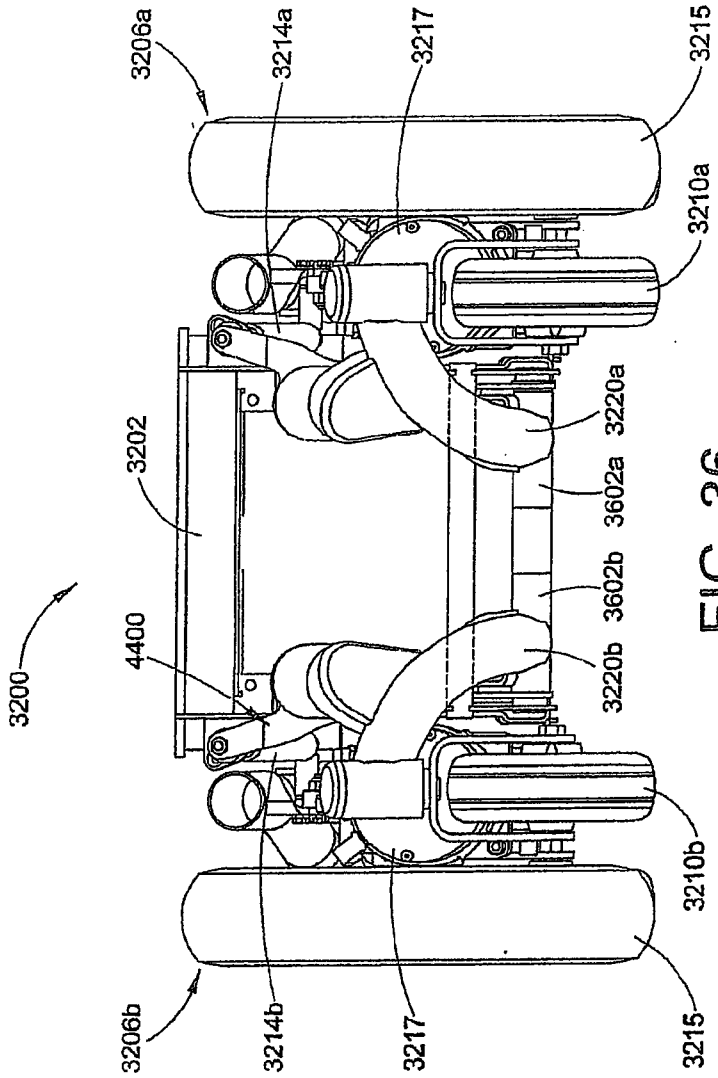
3200
3206a
3214a
3217
3215
3210a
3202
4400
3220a
3602a
3602b
3220b
3210b
3206b
3214b
3217
3215

FIG. 36

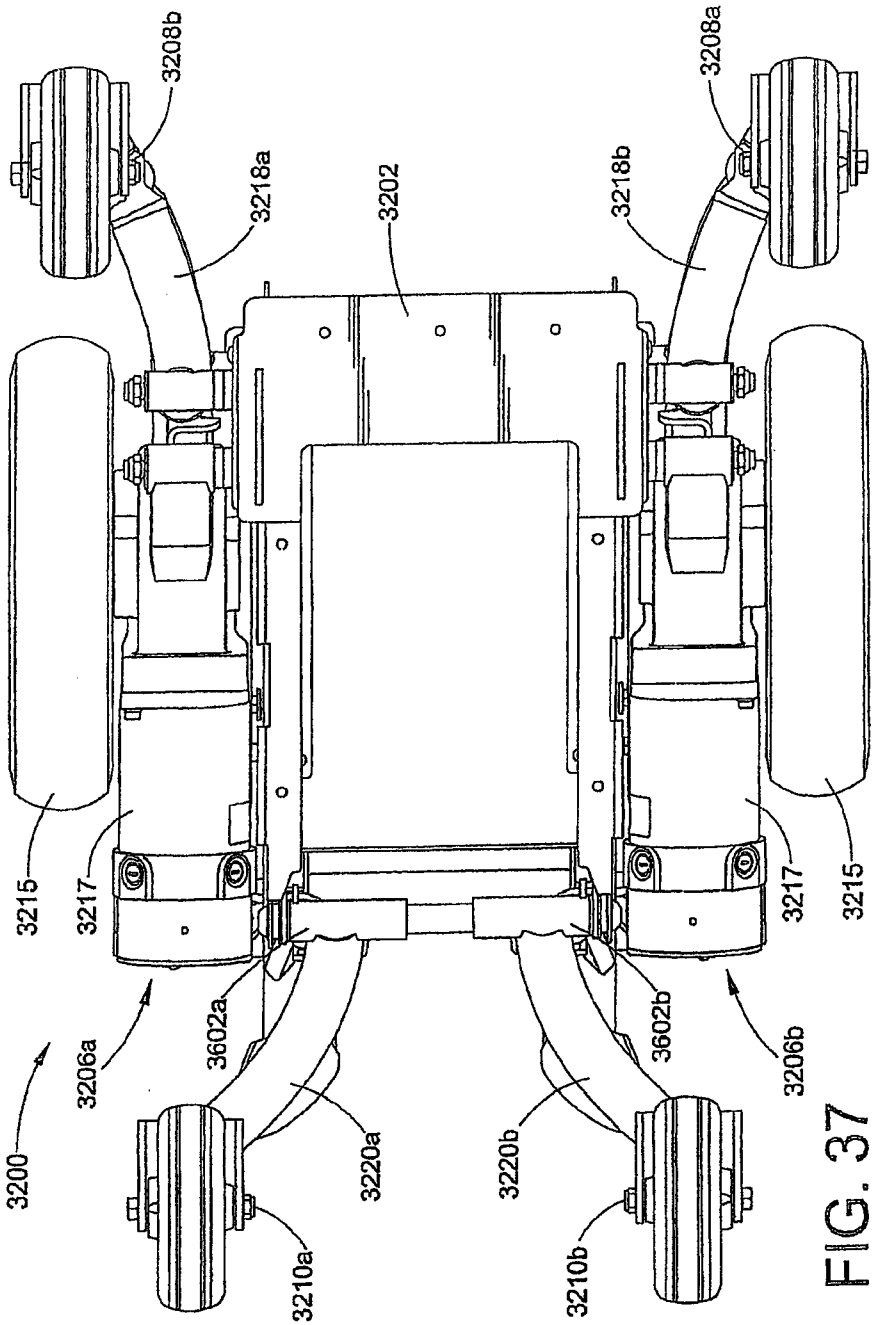
3208b
3208a
3218a
3202
3218b
3215
3217
3217
3215
3200
3206a
3602a
3602b
3206b
3220a
3220b
3210a
3210b

FIG. 37

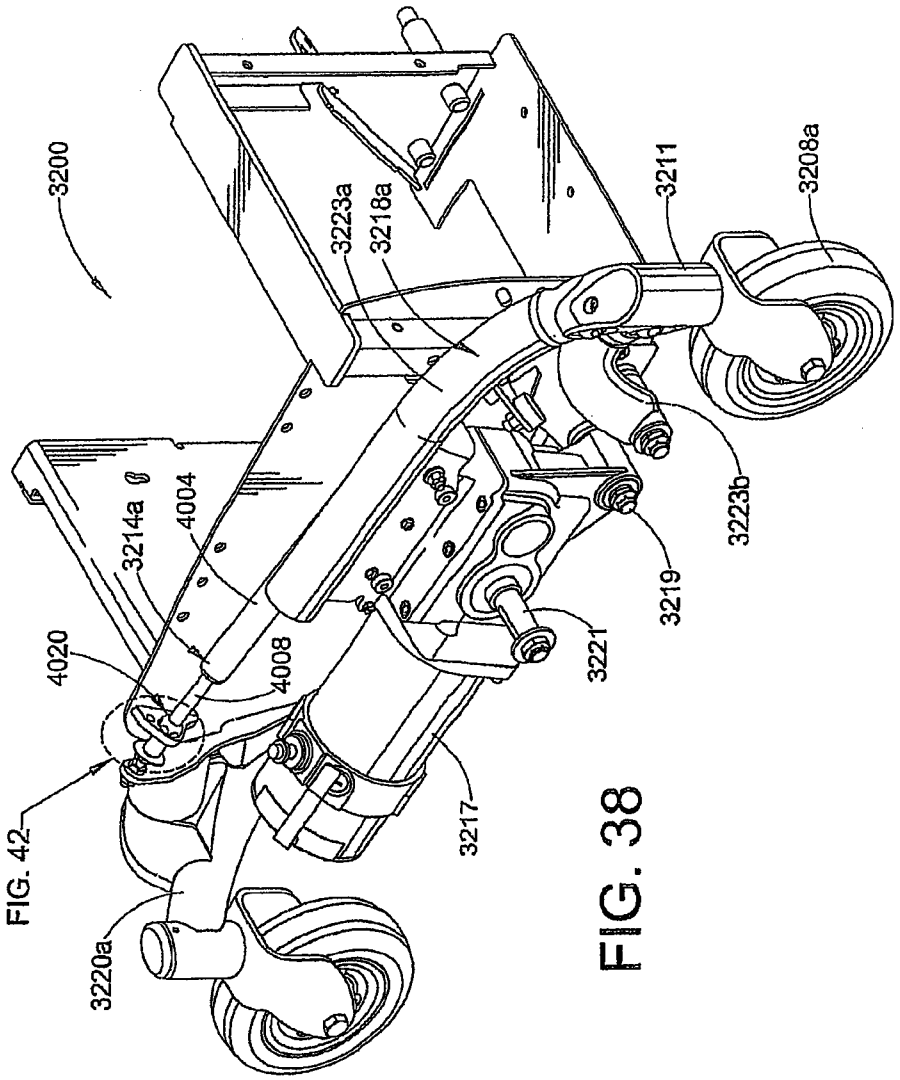
3200
3223a
3218a
3211
3208a
3214a
4004
4020
4008
3223b
3219
3221
3217
FIG. 42
3220a

FIG. 38

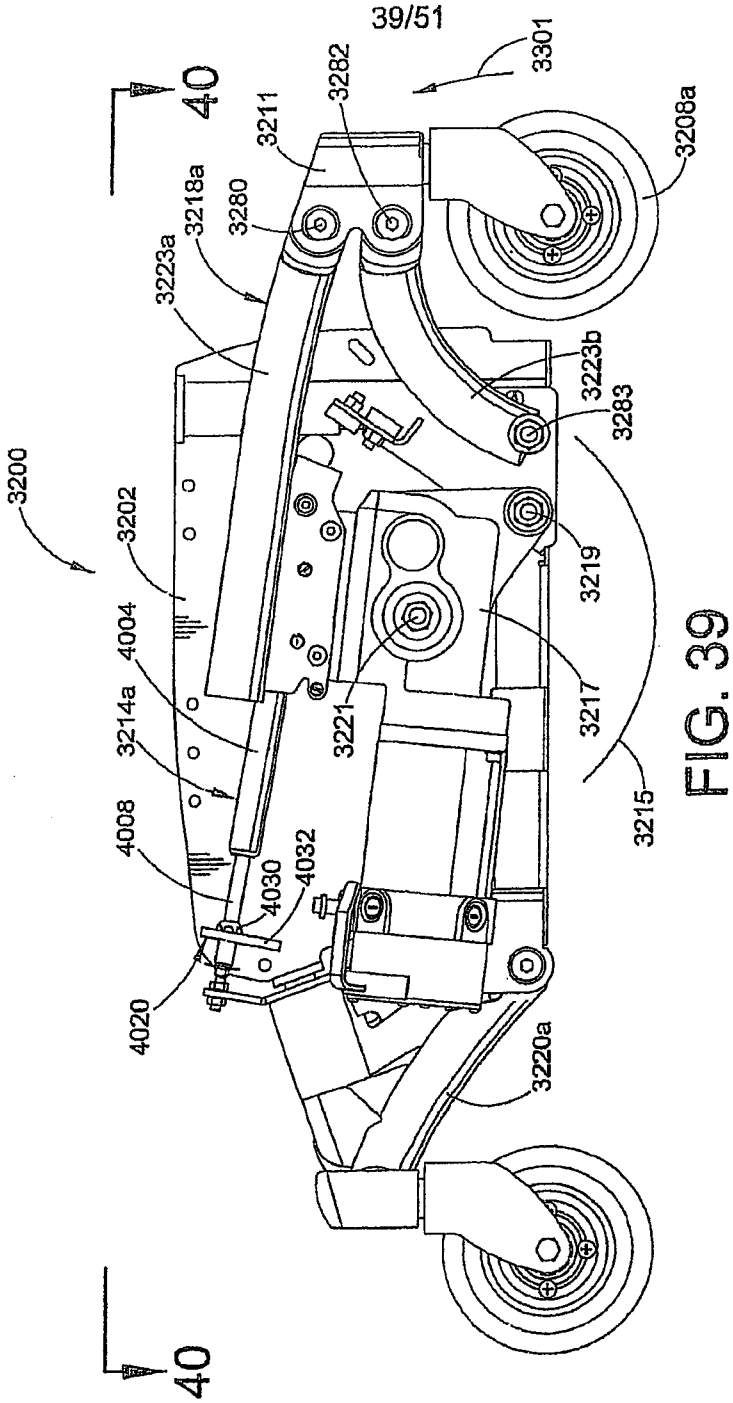
40
3301
3282
3211
3208a
3218a
3280
3223a
3223b
3283
3200
3202
3219
4004
3217
3214a
3221
3215
4008
4030
4032
4020
3220a
40

FIG. 39

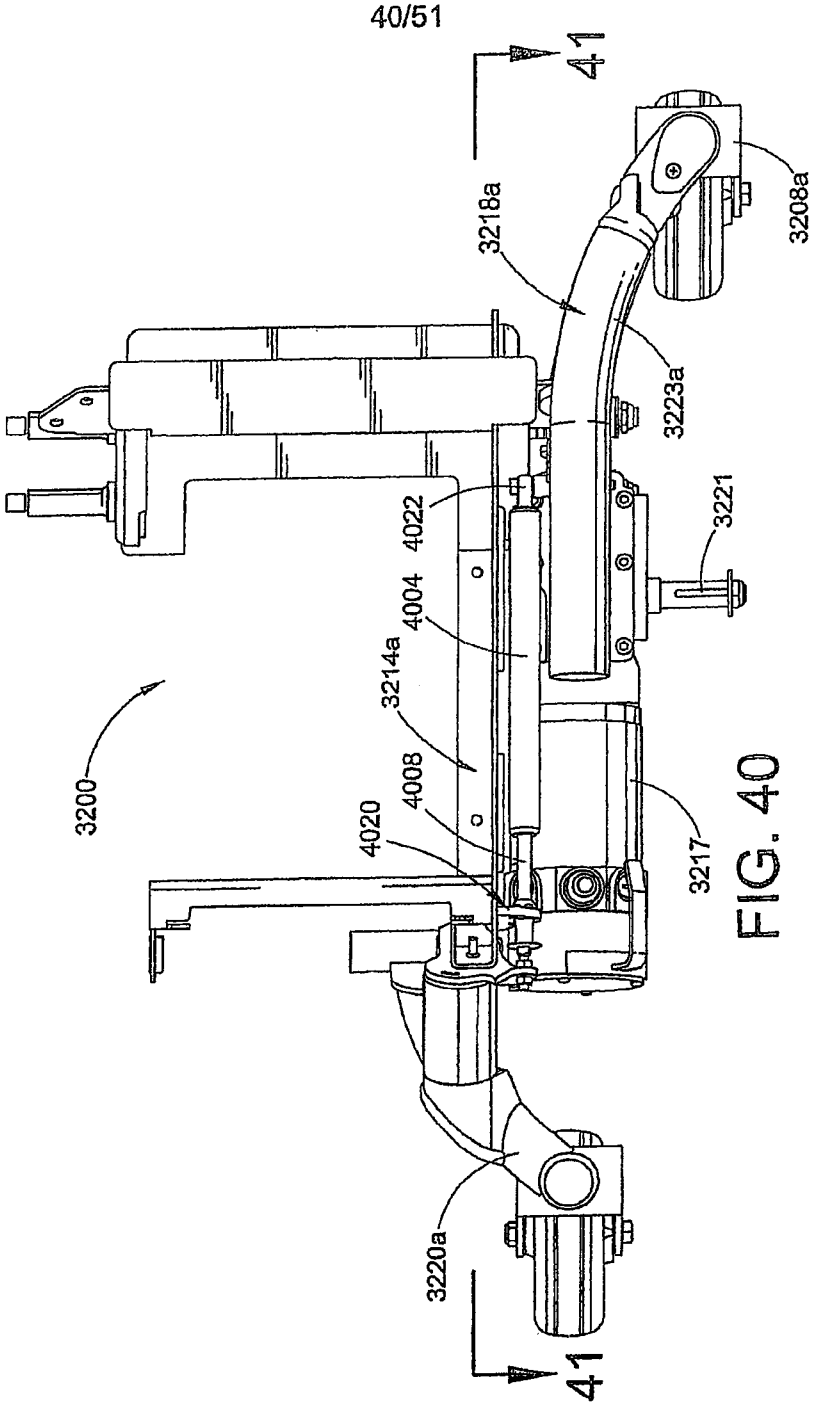
41
3218a
3208a
3223a
3221
4022
4004
3214a
3200
4008
4020
3217
3220a
41

FIG. 40

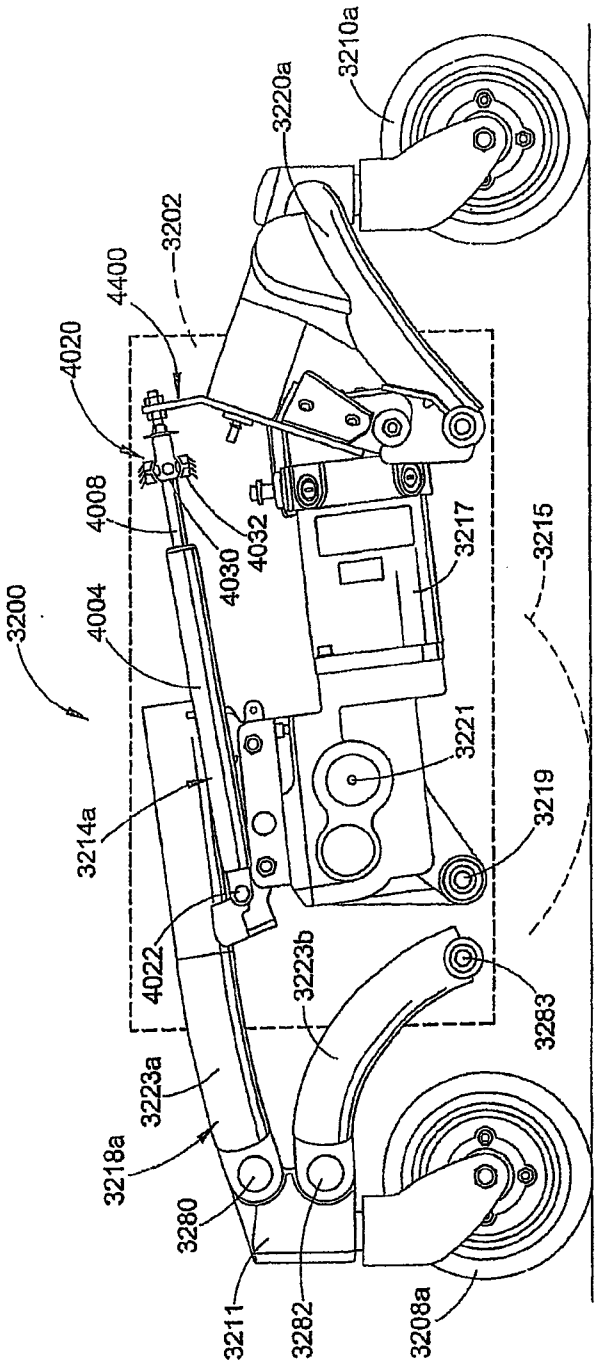
3200
4020
4400
3202
3220a
3210a
4008
4004
4030
4032
3217
3215
3214a
3221
3219
4022
3223b
3283
3223a
3218a
3280
3211
3282
3208a

FIG. 41

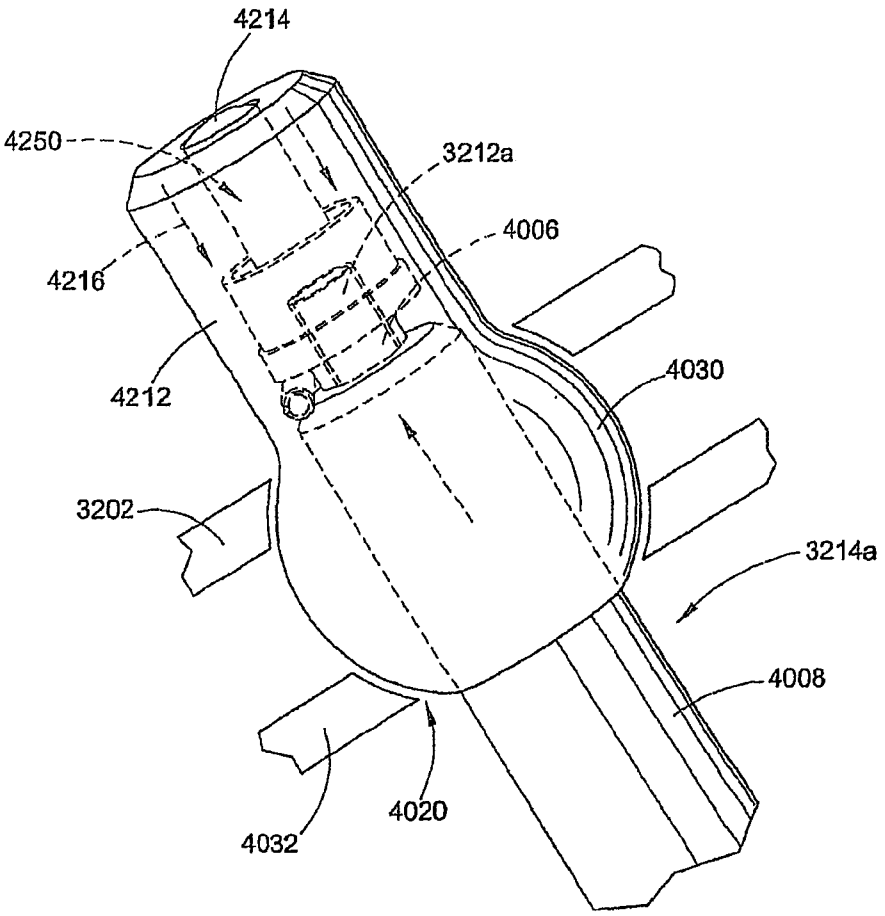
4214
4250
3212a
4006
4216
4212
4030
3202
3214a
4008
4020
4032

FIG. 42

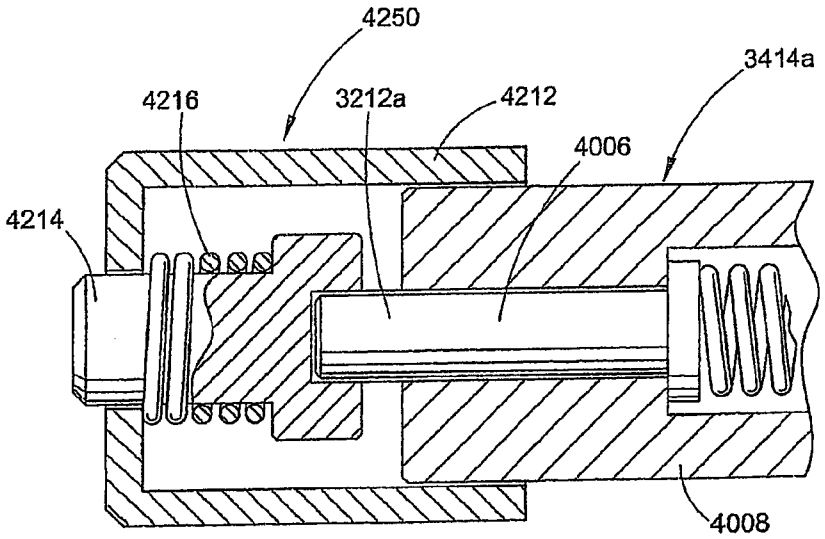

FIG. 43

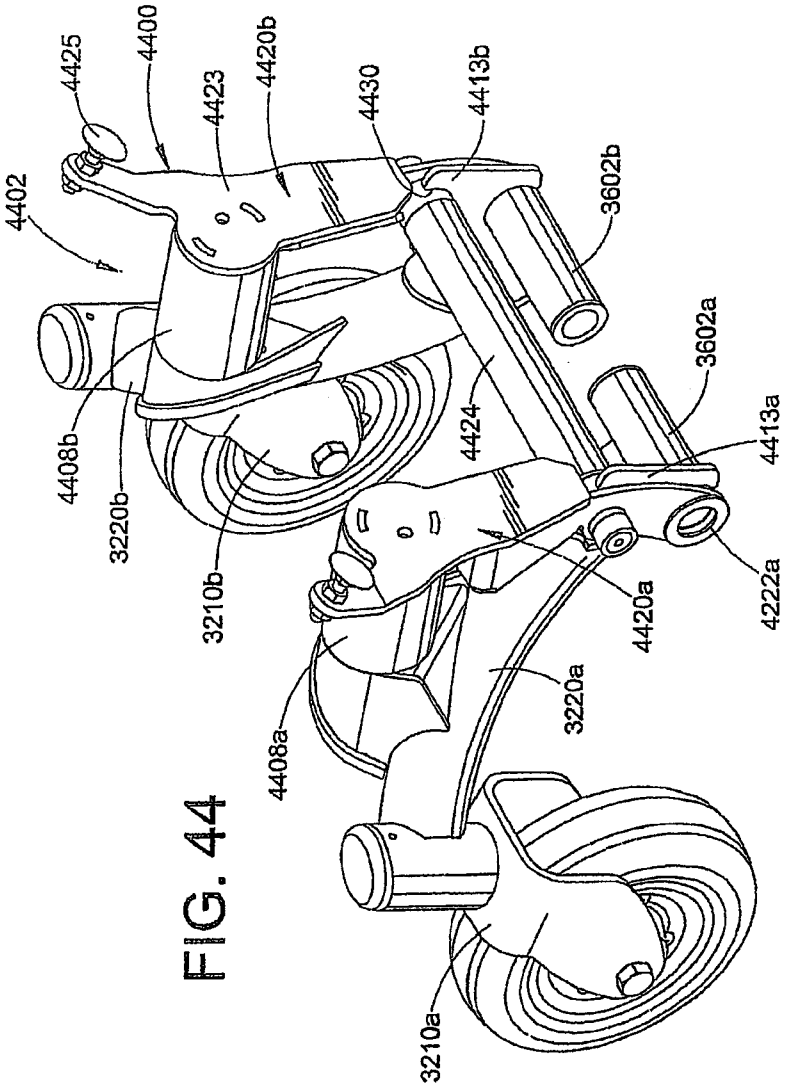
4402
4425
4400
4423
4420b
4430
4413b
3602b
4408b
3220b
3210b
4424
3602a
4413a
4222a
4420a
3220a
4408a
3210a

FIG. 44

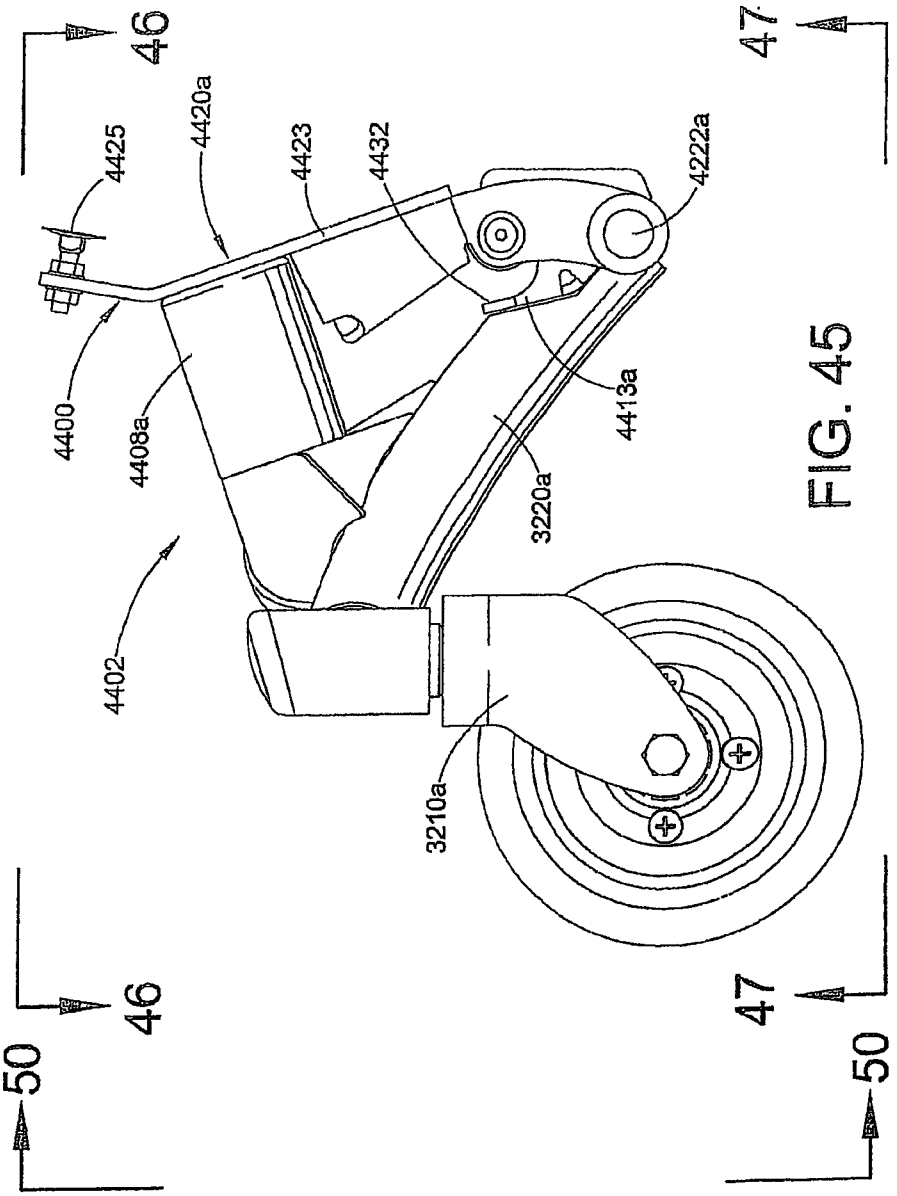
46
46
50
50
47
47
4425
4420a
4423
4432
4222a
4400
4408a
4413a
3220a
4402
3210a

FIG. 45

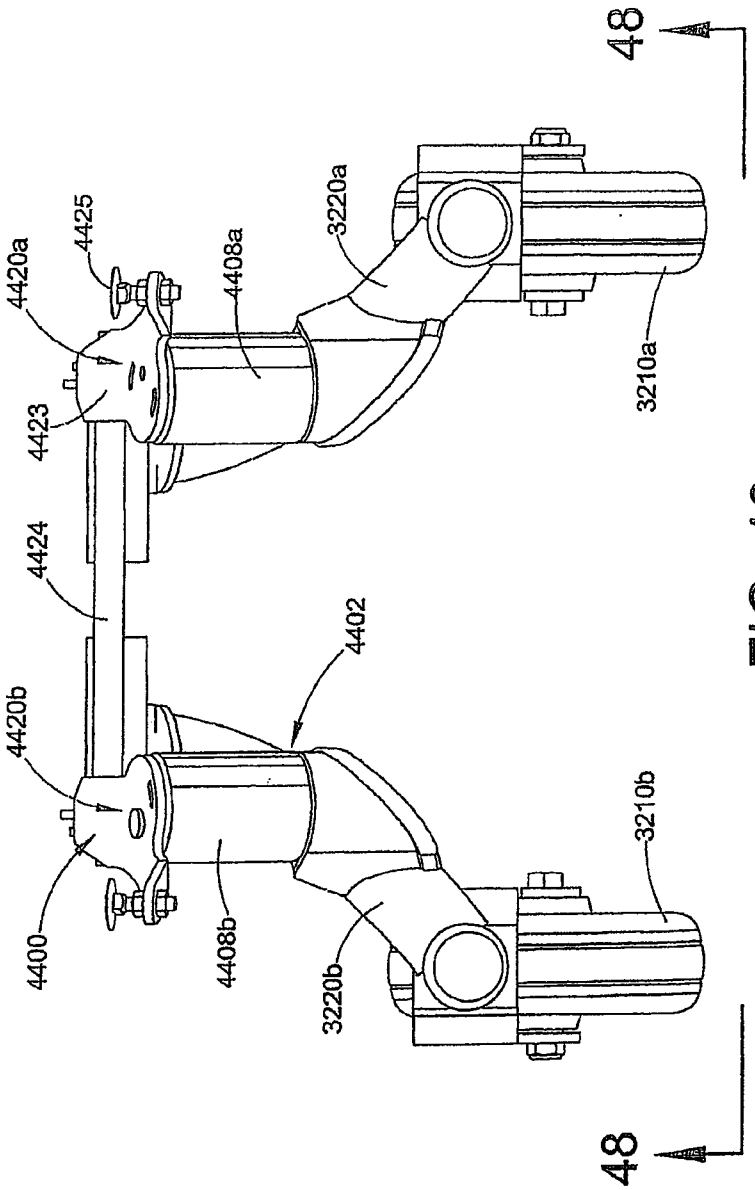
48
4420a
4425
4408a
3220a
3210a
4423
4424
4402
4420b
3210b
4400
4408b
3220b
48

FIG. 46

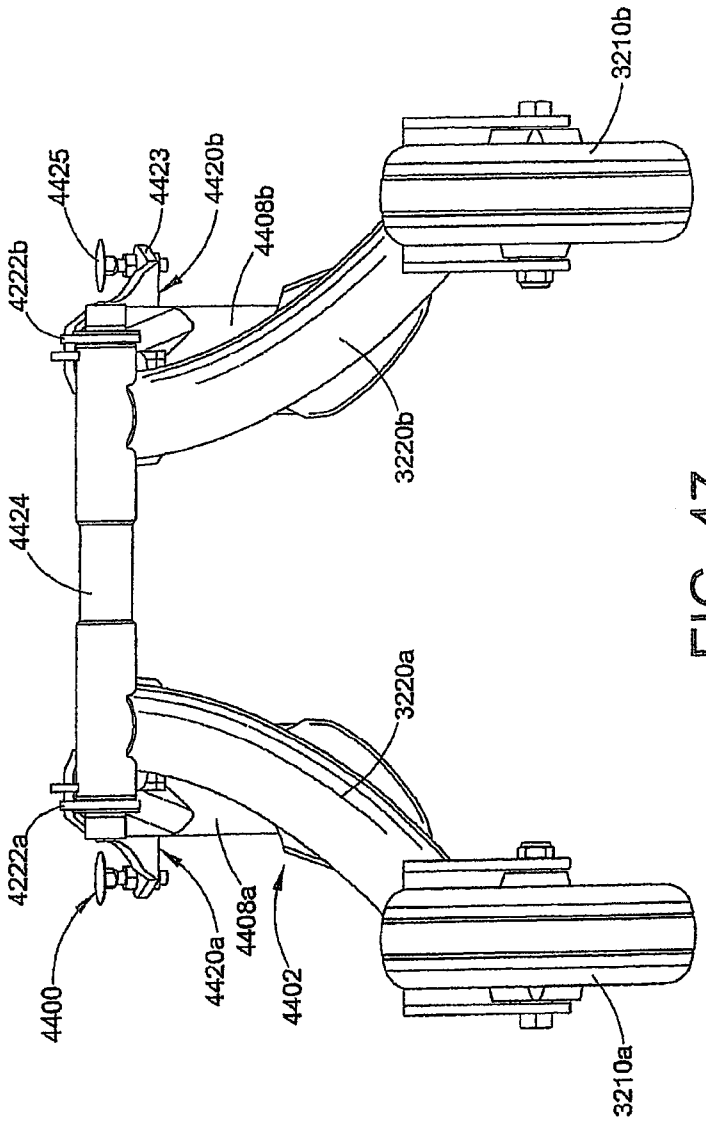
3210b
4425
4423
4420b
4408b
4222b
3220b
4424
3220a
4222a
4400
4420a
4408a
4402
3210a

FIG. 47

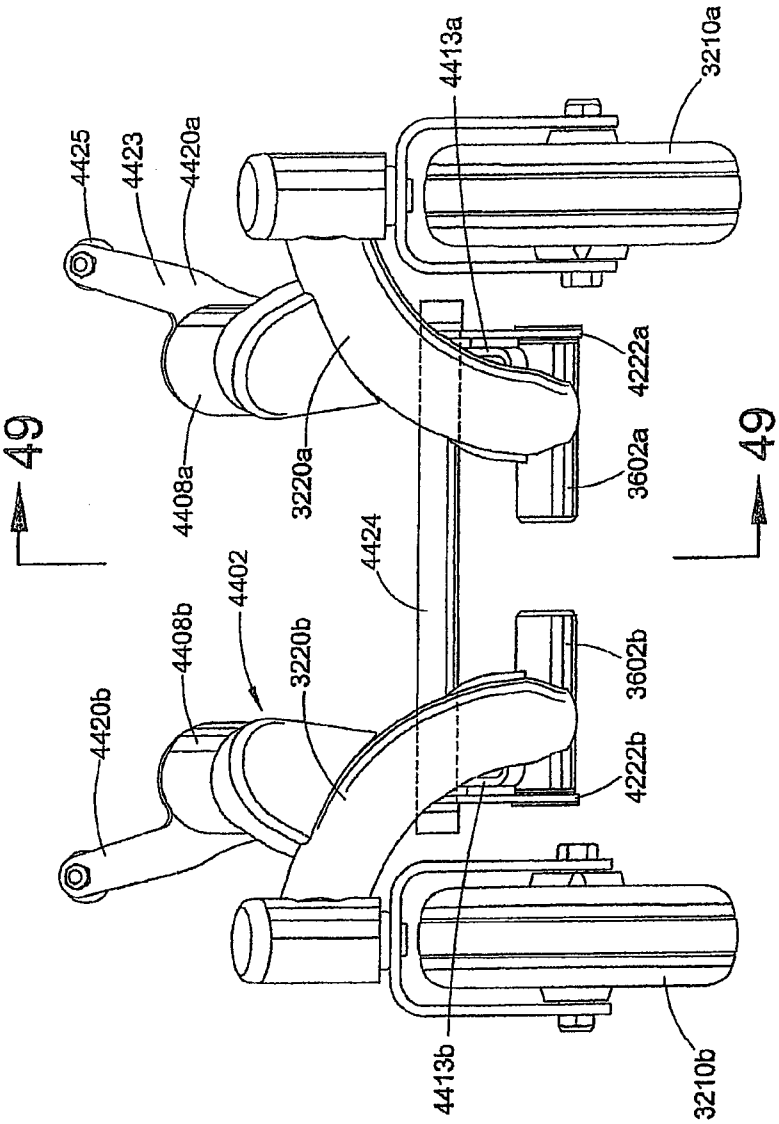
4425
4423
4420a
4413a
3210a
4222a
3602a
49
49
4408a
3220a
4424
4402
4408b
3220b
4420b
3602b
4222b
4413b
3210b

FIG. 48

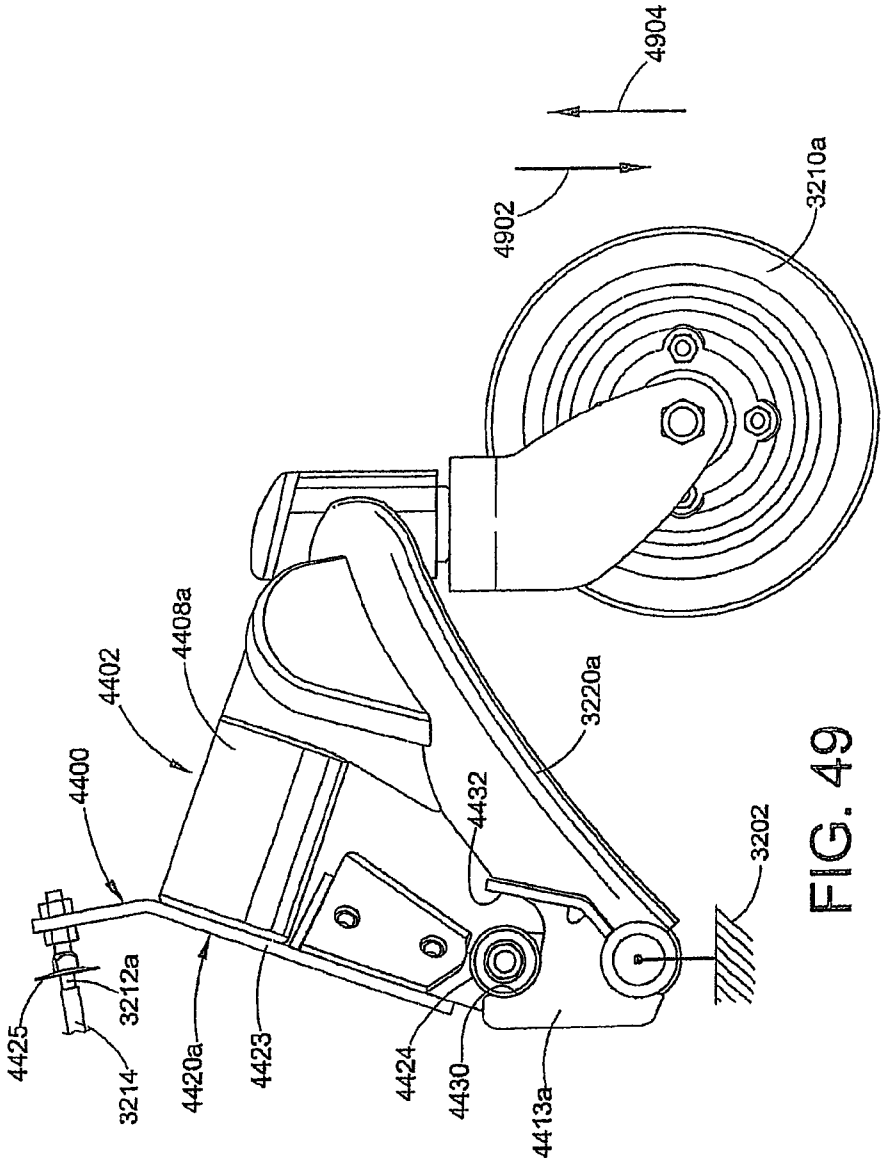
4904
4902
3210a
4408a
4402
4400
3220a
4432
3202
4425
3212a
3214
4420a
4423
4424
4430
4413a

FIG. 49

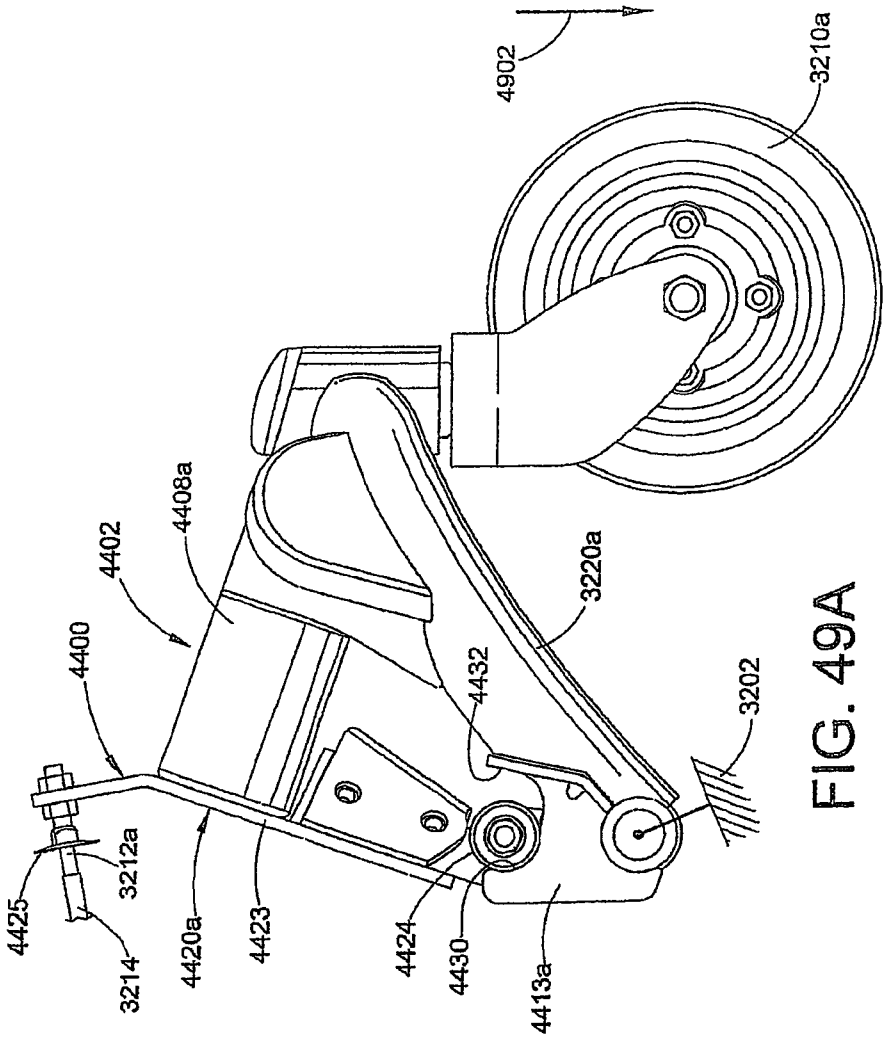
4902
3210a
4408a
4402
4400
3220a
4432
3202
4425
3212a
3214
4420a
4423
4424
4430
4413a

FIG. 49A

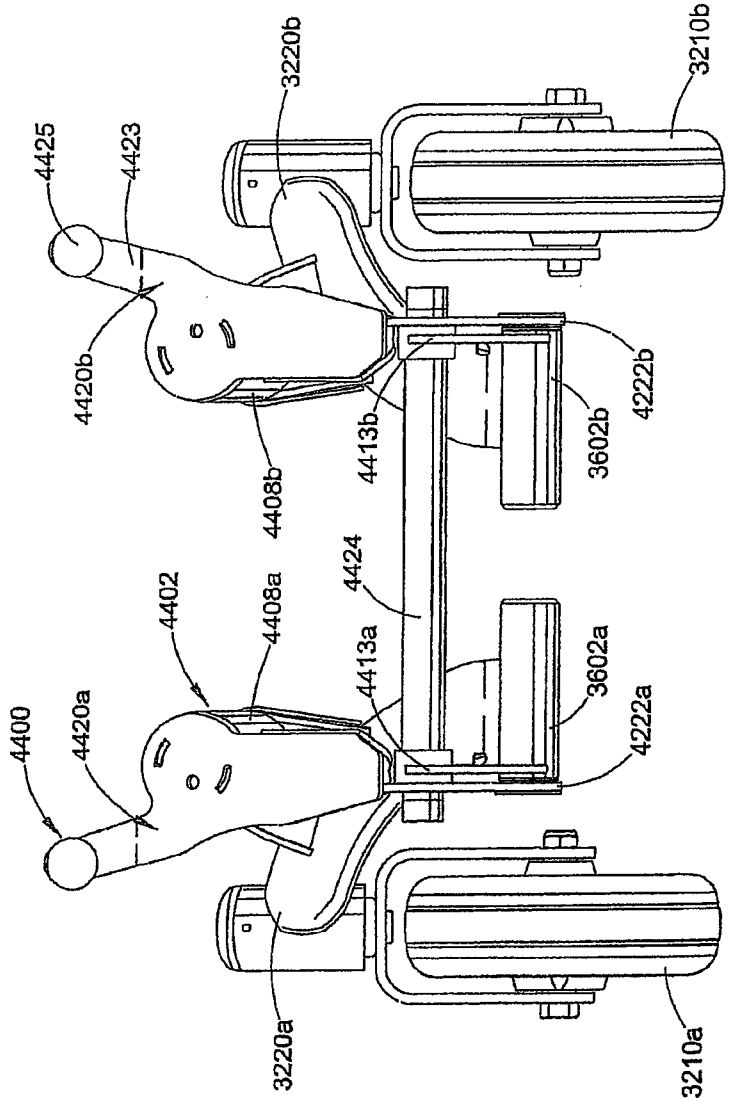
4400
4420a
4402
4408a
4413a
4424
4408b
4413b
4420b
4425
4423
3220b
3210b
4222b
3602b
3602a
4222a
3220a
3210a

FIG. 50

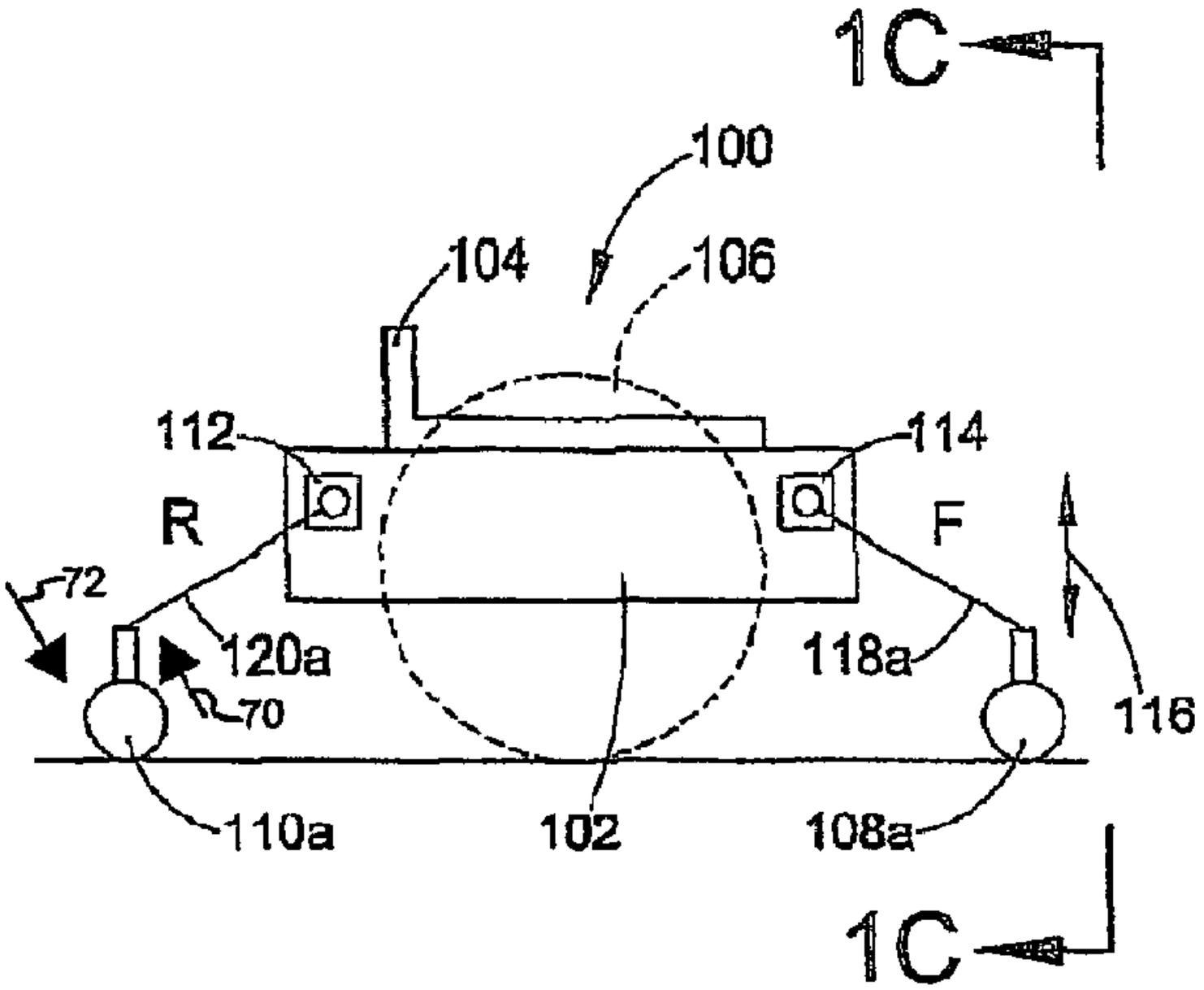
1C
100
104
106
112
114
R
F
72
120a
118a
70
116
110a
102
108a
1C