Office de la Propriété Intellectuelle du Canada
Un organisme d'Industrie Canada

Canadian Intellectual Property Office
An agency of Industry Canada

CA 2258894 C 2007/07/17

(11)(21) 2 258 894

(12) BREVET CANADIEN
CANADIAN PATENT

(13) C

(22) Date de dépôt/Filing Date: 1999/01/14

(41) Mise à la disp. pub./Open to Public Insp.: 1999/07/16

(45) Date de délivrance/Issue Date: 2007/07/17

(30) Priorité/Priority: 1998/01/16 (JP20,394-1998)

(51) Cl.Int./Int.Cl. *A61M 1/02* (2006.01),
*A61J 1/14* (2006.01)

(72) Inventeurs/Inventors:
ISHIDA, NOBORU, JP;
YOKOO, YOSHIHIRO, JP;
KUROKI, HITOSHI, JP

(73) Propriétaire/Owner:
TERUMO KABUSHIKI KAISHA, JP

(74) Agent: MACRAE & CO.

(54) Titre : DISPOSITIF POUR PRELEVEMENT SANGUIN
(54) Title: BLOOD COLLECTING APPARATUS

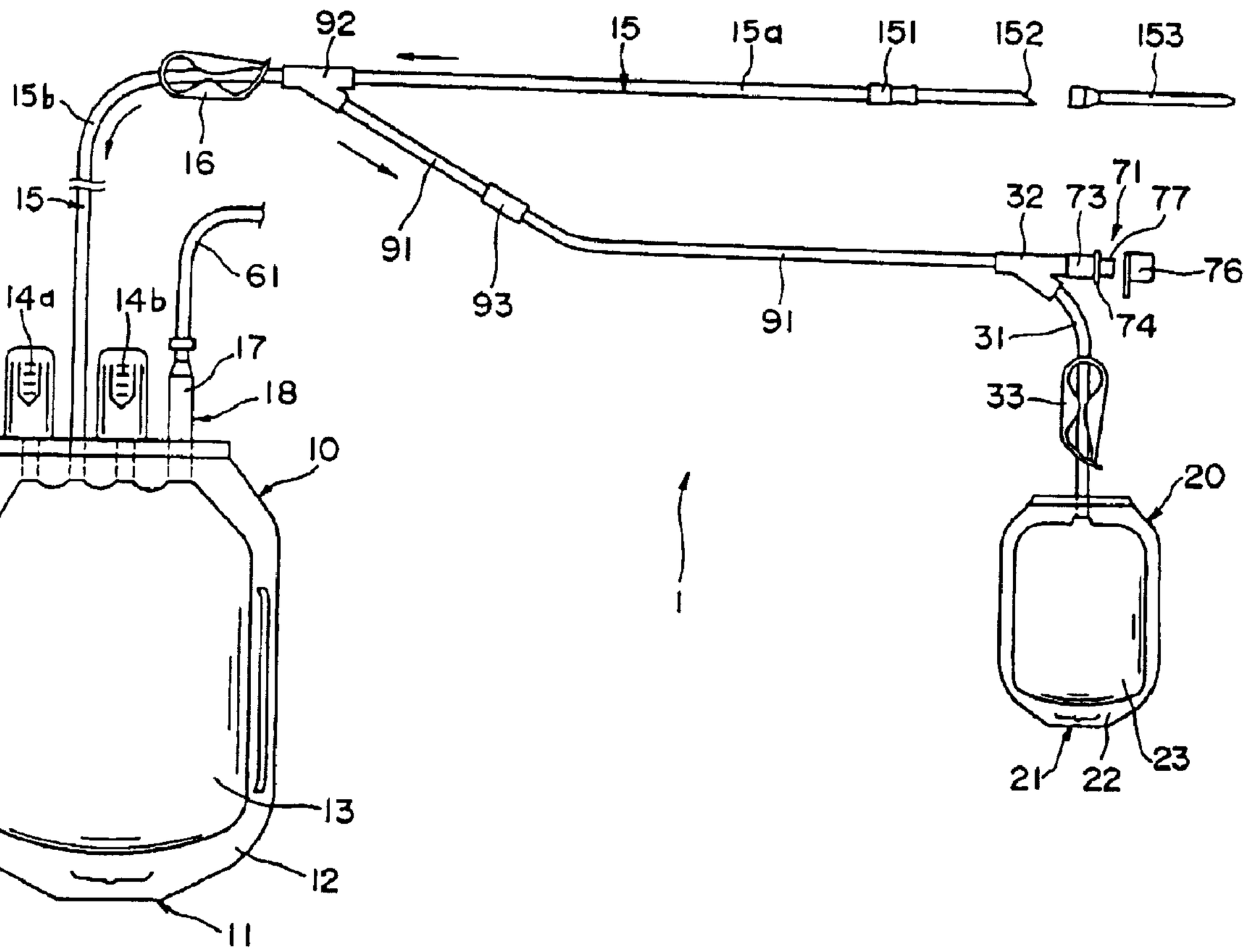


(57) Abrégé/Abstract:
A blood collecting apparatus 1 of the present invention comprises a blood collecting needle 152; the blood collecting bag 10; a first tube 15 (15a, 15b) whose one end communicates with the blood collecting bag 10 and other end communicates with the blood

CA 2258894 C 2007/07/17

(11)(21) 2 258 894

(13) C

(57) Abrégé(suite)/Abstract(continued):
collecting needle 152; the branch portion 92 provided on a portion of the first tube 15; a second tube 91 connected with the branch portion 92 at one end thereof and having a blood take-out port (sampling port) 71; and a flexible resin bag 20 including a third tube 31 communicating with the second tube 91. The flexible resin bag 20 is capable of accommodating air inside a part of the first tube 15 between the branch portion 92 and the blood collecting needle 152 and air inside the second tube 91 when the blood collecting apparatus is used.

# ABSTRACT OF THE DISCLOSURE

A blood collecting apparatus 1 of the present invention comprises a blood collecting needle 152; the blood collecting bag 10; a first tube 15 (15a, 15b) whose one end communicates with the blood collecting bag 10 and other end communicates with the blood collecting needle 152; the branch portion 92 provided on a portion of the first tube 15; a second tube 91 connected with the branch portion 92 at one end thereof and having a blood take-out port (sampling port) 71; and a flexible resin bag 20 including a third tube 31 communicating with the second tube 91. The flexible resin bag 20 is capable of accommodating air inside a part of the first tube 15 between the branch portion 92 and the blood collecting needle 152 and air inside the second tube 91 when the blood collecting apparatus is used.

# TITLE OF THE INVENTION

## Blood Collecting Apparatus

## BACKGROUND OF THE INVENTION

The present invention relates to a blood collecting apparatus.

In normal blood collecting (operation of introducing blood collected from a donor by a blood collecting needle into a blood collecting bag), a needle-piercing portion of the donor is sterilized with alcohol. But there is a possibility that bacteria present on or under the skin enters the blood collecting bag together with the blood.

The same kind of bacteria which have entered the blood collecting bag increase while the blood collecting bag is kept cold. When the blood is transfused into a patient, the patient may suffer from infectious disease or blood poisoning.

The pH of red blood cell conservation liquid (S.A.G.M. liquid, OPTISOL liquid, M.A.P. liquid, and the like) currently used is substantially neutral, unlike the conventional blood conservation liquid (anticoagulants such as ACD-A liquid and CPD liquid). Thus, in the red blood cell conservation liquid, bacteria increase to a high extent while the blood collecting bag is refrigerated.

Because the bacteria are present not only on the skin but also under the skin, only careful sterilization of the needle-piercing portion is not enough to prevent them from penetrating into blood.

It is experimentally known that bacteria penetrate into an initial flow of collected blood, together with fragments of skin. However, a blood collecting bag or a blood collecting apparatus capable of removing the initial flow of collected blood has not been developed.

It is an object of the present invention to provide a blood collecting apparatus and a blood-collecting method to be carried out by using the blood collecting apparatus capable of preventing blood from being contaminated with bacteria, improving safety,

and collecting examination blood in a preferable state.

## SUMMARY OF THE INVENTION

In order to achieve the object, there is provided a blood collecting apparatus comprising a blood collecting needle for collecting blood from a donor, a blood collecting bag for accommodating collected blood, a first tube whose one end communicates with said blood collecting bag and other end communicates with said blood collecting needle, a branch portion provided on a portion of said first tube, a second tube connected with said branch portion at one end thereof and having a blood take-out port, and a flexible resin bag and having a third tube communicating with said second tube.

In order to further achieve the object, there is provided a blood collecting apparatus comprising a blood collecting needle for collecting blood from a donor, a blood collecting bag for accommodating collected blood, a first tube whose one end communicates with said blood collecting bag and other end communicates with said blood collecting needle, a branch portion provided on a portion of said first tube, a second tube connected with said branch portion at one end thereof and having a blood take-out port, and a filter gas-permeable and blood-impermeable and communicable with an interior of said second tube.

In order to further achieve the object, there is provided a blood collecting apparatus comprising, a blood collecting needle for collecting blood from a donor, a blood collecting bag for accommodating collected blood, a first duct whose one end communicates with said blood collecting bag and other end communicates with said blood collecting needle, and introducing said collected blood into said blood collecting bag, a second duct branching from said first duct through a branch portion and having a blood take-out port, and a pressure buffering means for suppressing fluctuation of a

pressure of said second duct.

## BRIEF DESCRIPTION OF THE DRAWINGS

Fig. 1 is a plan view showing a first embodiment of the blood collecting apparatus of the present invention.

Fig. 2 is a vertical sectional view showing an example of the construction of a sealing member to be used for the blood collecting apparatus of the present invention.

Fig. 3 is a vertical sectional view showing an example of the construction of a sampling port to be used for the blood collecting apparatus of the present invention.

Fig. 4 is a vertical sectional view showing a front end of the sampling port of Fig.3, a vacuum blood collecting tube and a holder for the blood collecting tube.

Fig. 5 is a plan view showing a second embodiment of the blood collecting apparatus of the present invention.

Fig. 6 is a sectional view showing an example of a filter for use in the blood collecting apparatus of the present invention.

Fig. 7 is a plan view showing a third embodiment of the blood collecting apparatus of the present invention.

Fig. 8 is a sectional view showing an example of a filter for use in the blood collecting apparatus of the present invention.

Fig. 9 is a plan view showing a fourth embodiment of the blood collecting apparatus of the present invention.

Fig. 10 is a vertical sectional view showing an example of a check valve for use in the blood collecting apparatus of the present invention.

Fig. 11 is a sectional view taken along a line A-A of Fig. 10.

Fig. 12 is a plan view showing the fifth embodiment of the blood collecting apparatus of the present invention.

Fig. 13 is a plan view showing a sixth embodiment of the blood collecting apparatus of the present invention.

Fig. 14 is a plan view showing a seventh embodiment of the blood collecting apparatus of the present invention.

## DETAILED DESCRIPTION OF THE PREFERRED EMBODIMENTS

The preferred embodiments of the blood collecting apparatus of the present invention will be described in detail below.

Each of the blood collecting apparatus 1, 1a, 1b, 1c, 1d, 1e, and 1f of the present invention comprises a blood collecting needle 152 for collecting blood from a donor; a blood collecting bag 10 for accommodating collected blood; a first duct whose one end communicates with a blood collecting bag 10 and other end communicates with a blood collecting needle 152 and introducing collected blood into the blood collecting bag 10; a second duct branching from the first duct through a branching portion and having a take-out port of blood at an end thereof. Each of the blood collecting apparatus 1, 1a, 1b, 1c, 1d, 1e, and 1f comprises a pressure buffering means for suppressing the fluctuation of the pressure of the second duct.

More specifically, each of the blood collecting apparatus 1, 1c and 1f of the present invention comprises the blood collecting needle 152 for collecting blood from a donor; the blood collecting bag 10 for accommodating collected blood; a first tube 15 (15a, 15b) whose one end communicates with the blood collecting bag 10 and other end communicates with the blood collecting needle 152; the branch portion 92 provided on a portion of the first tube 15; a second tube 91 connected with the branch portion 92 at one end thereof and having a blood take-out port (sampling port) 71 at the other end thereof; and a flexible resin bag 20 and having a third tube 31 communicating with the second tube 91. The flexible resin bag 20 including the third tube 31 is capable of accommodating air inside a part of the first tube 15 (first tube 15a at the side of the blood collecting needle 152) between the branch portion 92 and the blood collecting needle 152 and air inside the second tube 91 when the blood collecting apparatus is used.

Fig. 1 is a plan view showing a first embodiment of the blood collecting apparatus of the present invention. As shown in Fig. 1, the blood collecting apparatus 1 has a blood collecting bag 10 for accommodating collected blood.

The blood collecting bag 10 has a body 11 formed by fusing (heat fusion, high frequency fusion or the like) or bonding to each other the periphery of a sealing portion 12 of two sheet materials made of a flexible soft resin such as polyvinyl chloride and laminated on each other, as will be described later.

A blood-accommodating portion 13 accommodating collected blood is formed at an inner portion surrounded with the sealing portion 12 of the body 11. The blood collecting bag 10 may be used as a red blood cell bag for preserving red blood cells. In this case, the blood-accommodating portion 13 accommodates and stores red blood cell rich liquid.

Two openings 14a and 14b each sealed with a peel tab are formed at an upper portion of the body 11 such that they can be opened. An out let port 18 is formed alongside of the opening 14b. The out let port 18 is connected with one end of a tube 61 through a sealing member 17 (connection member). As the sealing member 17, it is possible to use a member having a construction similar to that of a sealing member 93 that will be described later.

Although not shown in Fig. 1, one or more bags such as a blood plasma bag, a buffy coat bag, a platelet bag (medical fluid-storing bag) may be provided at the other end of the tube 61. That is, the blood collecting apparatus 1 may constitute a bag-connected device.

In the present invention, it is possible to omit the provision of the sealing member 17, the out let port 18, and the tube 61.

One end of the flexible first tube 15 communicating with the blood-accommodating portion 13 is connected with the body 11 at an upper portion thereof. A blood collecting needle 152 is installed at the other end of the first tube 15 through a hub 151. A cap 153 which is to cover the blood collecting needle 152 is installed on the hub 151. A main part of the first duct is composed of the lumen of the

first tube 15.

The first branch connector 92 (branch portion) branching bifurcately is provided at a portion of the first tube 15. For example, the first branch connector 92 (branch portion) is located at an intermediate portion of the first tube 15 or at the side of the blood collecting bag 10 of the first tube 15. One end of the flexible second tube 91 is connected with the first branch connector 92. A main part of the second duct is composed of the lumen of the second tube 91. The first tube 15 comprises a first tube 15a which is positioned at the side of the blood collecting needle 152 with respect to the first branch connector 92 and a first tube 15b which is positioned at the side of the blood collecting bag 10 with respect to the first branch connector 92.

Although the first branch connector 92 shown in Fig. 1 consists of a y-shaped tube, the first branch connector 92 of the present invention may be Y-shaped, T-shaped or inverse y-shaped.

A clamp (first duct-sealing member) 16 is provided on a portion of the first tube 15 between the first branch connector 92 and the blood collecting bag 10. That is, the clamp 16 is provided on the first tube 15b located at the side of the blood collecting bag 10 with respect to the first branch connector 92. Preferably, the clamp 16 is positioned proximately to the first branch connector 92.

A second branch connector (branch portion) 32 branching bifurcately is provided at the other end of the second tube 91. The second branch connector 32 is connected with a sampling port (connector) 71 constituting a blood take-out port. The construction of the sampling port 71 will be described in detail later.

Although the second branch connector 32 shown in Fig. 1 consists of a y-shaped tube, the second branch connector 32 of the present invention may be Y-shaped, T-shaped or inverse y-shaped.

In the blood collecting apparatus 1, the sampling port 71 is connected with the other end of the second tube 91 through the second branch connector 32. It is possible to position the second branch connector 32 at a portion of the second tube 91 between both ends thereof and directly connect the sampling port 71 with the other end of the

second tube 91. The sampling port (blood take-out port ) 71 may be provided at a portion of the second tube 91. For example, the sampling port (blood take-out port ) 71 may be provided at an intermediate portion of the second tube 91 or at the other end side of the second tube 91.

A sealing member (second duct-sealing member) 93 is provided at a portion of the second tube 91. In this case, preferably, the sealing member 93 is positioned proximately to the first branch connector 92. The construction of the sealing member 93 will be described in detail later.

The blood collecting apparatus 1 has a flexible resin bag 20 for suppressing fluctuation of pressure.

The flexible resin bag 20 has a body 21 formed by fusing (heat fusion, high frequency fusion or the like) or bonding to each other the periphery of a sealing portion 22 of two sheet materials made of a flexible soft resin such as polyvinyl chloride and laminated on each other, as will be described later.

The body 21 has an accommodating portion 23 formed in an inner part thereof surrounded with a sealing portion 22 thereof.

One end (termination) of a flexible third tube 31 communicating with the accommodating portion 23 is connected with the body 21 at an upper portion thereof. The other end of the third tube 31 is connected with the second branch connector 32. A main part of the third duct is composed of the lumen of the third tube 31.

The capacity of the bag 20 is not limited to a specified one but determined in consideration of various conditions such as the spatial volume (capacity) of the lumen of the tubes forming the circuit. It is favorable to set the capacity of the bag 20 to 1 - 100ml and more favorably to 5 - 30ml. If the capacity of the bag 20 is less than the lower limit of the above-described range, the effect of the bag 20 which will be described later may not be obtained when the spatial volume of the lumen of the tube forming the circuit is comparatively large. On the other hand, if the capacity of the bag 20 is more than the upper limit of the above-described range, the blood collecting apparatus 1 is caused to be large.

The flexible resin bag 20 including the third tube 31 is capable of accommodating air inside the first tube 15a at the side of the blood collecting needle 152 and air inside the second tube 91 when the blood collecting apparatus is used.

A clamp (third duct-sealing member) 33 is provided on the third tube 31. Preferably, the clamp 33 is positioned proximately to the second branch connector 32 to prevent reduction of the amount of an initial flow of collected blood (hereinafter referred to as initial flow blood or initial introduced blood) which can be introduced into a first vacuum blood collecting tube 85 which will be described later.

In the blood collecting apparatus 1, a pressure buffering means for preventing fluctuation of the pressure in the second duct is constituted of the second branch connector 32, the third tube 31, the clamp 33, and the bag 20.

It is preferable to set the area of the sectional surface of the duct of the second tube 91 smaller than that of the sectional surface of the first tube 15. That is, it is preferable to set the inner diameter of the second tube 91 smaller than that of the first tube 15 to allow collected blood to be left in a small amount in the second tube 91 in introducing collected blood into the blood collecting bag 10, as will be described later.

It is preferable to put an anticoagulant agent in the blood collecting bag 10 in advance. Normally, the anticoagulant agent is a liquid. An ACD-A liquid, a CPD liquid, and a CPDA-1 liquid, and a heparin sodium liquid can be used as the anticoagulant agent. The amount of the anticoagulant agent is appropriately determined according to an amount of blood to be collected.

The sheet material composing the blood collecting bags 10 and 20 and the material composing the first tube 15, the third tube 31, the tube 61, and the second tube 91 will be described below.

[1] Material of Blood Collecting Bag 10

The composition, characteristic, and the like of the material of the sheet composing the body 11 of the blood collecting bag 10 are not limited to specified ones.

In this case, as the sheet material composing the blood collecting bag 10, soft polyvinyl chloride or materials containing the soft polyvinyl chloride as their main

component can be preferably used. For example, a copolymer containing the soft polyvinyl chloride as its main component and a small amount of macromolecular material, a polymer blend, a polymer alloy, and the like can be used.

As the plasticizer for the soft polyvinyl chloride, dioctylphthalate (DEHP, di(2-ethylhexyl)phthalate) and (DnDP, di(n-decyl)phthalate) can be preferably used.

It is favorable to contain the plasticizer in the sheet material at 25 - 50wt% and more favorable at 30 - 40wt%. The above-described sheet materials can be manufactured by a method described below.

Using a kneader, materials are kneaded sufficiently. Then, a kneaded material is extruded through a T-shaped die or a circular die. Then, a resulting flat sheet-shaped material is processed into a desired shape/form by sequentially performing the steps of thermoforming, blowing, drawing, cutting, and sealing (fusing) of the edge thereof.

In order to prevent blocking from occurring between sheets (base material), it is possible to roughen (emboss) the surface of each sheet or add or apply a blocking-preventing agent, a slip agent or the like to the materials.

[2] Material of Flexible Resin Bag 20

The composition, characteristic, and the like of the sheet material composing the body 21 of the bag 20 are not limited to specified ones. For example, materials similar to the sheet material of the blood collecting bag 10 may be used to form the bag 20. In this case, the kind of sheet material to be prepared can be reduced, which is advantageous in manufacturing the bag 20.

[3] Materials of Tubes 15, 31, 61, and 91

As the material of the tubes 15, 31, 61, and 91, thermoplastic elastomers or thermoplastic flexible resin such as soft polyvinyl chloride, polyethylene, polypropylene, ethylene-vinyl acetate copolymer, styrene-butadiene-styrene copolymer, and materials containing the thermoplastic elastomers or the thermoplastic flexible resin. The soft polyvinyl chloride and a material containing the soft polyvinyl chloride as its main component are preferable.

The tubes 15, 31, 61, and 91 made of the soft polyvinyl chloride can be handled

easily because they are flexible and pliable and can be suitably sealed with a clamp or the like. Further, because the soft polyvinyl chloride is compatible with the sheet material of the bags 10 and 20, the tube made of the soft polyvinyl chloride and the sheet material of the bags 10 and 20 can be fused or bonded to each other at a high degree. Furthermore, the tube made of the soft polyvinyl chloride has a high degree of airtightness. In addition, the tube made of the soft polyvinyl chloride is durable for centrifuging operation and preferably maintains sterility. The kind of plasticizer to be used for the tubes is not specified. The content thereof is also not specified.

The sizes such as the inner and outer diameters of the second tube 91 are not specified. But if the inner diameter thereof is too large or the thickness thereof is too small (ratio of outer diameter to inner diameter is small), the second tube 91 is likely to be flatly deformed when high pressure-steam sterility is performed . This is because the second tube 91 is soft and sealed with the sealing member 93 and a cap 76 which will be described later.

If the inner diameter of the second tube 91 is comparatively large, the spatial volume (volume) of the lumen of the second tube 91 is large accordingly. Consequently, blood loss may occur because of the large spatial volume when collecting of an initial flow blood or an initial introduced blood (hereinafter referred to as initial blood collection) and subsequent (main) blood collection are performed.

As a measure to solve the problem of the volume inside the second tube 91, it is conceivable to adopt a method of using the second tube 91 having small inner and outer diameters. But there is a limitation in the reduction of the outer diameter of the second tube 91 because it is necessary to connect (join) the second tube 91 with other members. Further, the method is incapable of preventing deformation of the second tube 91 sufficiently in the high pressure-steam sterilization.

Accordingly, to solve such a problem effectively, it is favorable to set the inner diameter of the second tube 91 to 0.5 - 2.0mm and more favorably to 0.8 - 1.5mm. It is also favorable to set the outer diameter thereof to 2 - 4 times as large as the inner diameter thereof and more favorably to 2.5 - 3.5 times as large as the inner diameter

thereof.

If the inner diameter of the second tube 91 exceeds the upper limit of the above-described range, the amount of air to be exhausted from the second tube 91 increases in the initial blood collecting into the vacuum blood collecting tube 85 which will be described later. Thus, it is necessary to shorten the second tube 91 or increase the volume of the bag 20.

If the inner diameter of the second tube 91 is less than the lower limit of the above-described range, blood is prevented from smoothly flowing in the initial blood collecting into the vacuum blood collecting tube 85. That is, there is a possibility that the flow rate of the blood is insufficient. It is preferable that the flow rate of blood is in the range of 1 - 5ml/sec.

The outer diameter of the second tube 91 most suitable in the connection thereof with other members is preferably in the range of 4.0 - 4.5mm.

The construction of each of the sealing members 17 and 93 will be described below. The constructions of the sealing members 17 and 93 are similar to each other. Thus, the construction of the sealing member 93 will be described below representatively.

Fig. 2 is a longitudinal sectional view showing an example of the construction of the sealing member 93. As shown in Fig. 2, the sealing member 93 comprises a short tube 930 made of a flexible resin such as soft polyvinyl chloride and a cylindrical body 931 which is liquid-tightly inserted into the short tube 930 and whose one end is sealed with a solid columnar portion 932.

One end of the second tube 91 positioned at an upper side in Fig. 2 is liquid-tightly connected with the upper end of the short tube 930. One end of the second tube 91 positioned at a lower side in Fig. 2 is liquid-tightly connected with the lower end of the short tube 930.

A thin and frail breakable portion 933 is formed on the periphery of the cylindrical body 931. The breakable portion 933 is broken by bending the solid columnar portion 932 together with the short tube 930 with fingers to separate the solid

columnar portion 932 from the cylindrical body 931. As a result, the duct of the sealing member 93 is opened.

The cylindrical body 931 is made of hard materials such as hard polyvinyl chloride, polycarbonate, polyester or the like.

Referring to Fig. 2, the upper portion of the solid columnar portion 932 is wedge-shaped. The upper end of the solid columnar portion 932 is widthwise smaller than the outer diameter of the cylindrical body 931 and widthwise larger than the inner diameter of the second tube 91. This is because the solid columnar portion 932 does not seal the second tube 91 after the solid columnar portion 932 is broken and separated from the cylindrical body 931. As shown in Fig. 2, a groove 935 may be formed on the upper end portion 934 of the solid columnar portion 932 to accelerate the flow of blood.

The construction of the sampling port 71 will be described below. Fig. 3 is a vertical sectional view showing an example of the construction of the sampling port 71. In the description made below, the right side of the sampling port 71 in Fig. 3 is referred to as "front side " and the left side thereof is referred to as "rear side".

As shown in Fig. 3, the sampling port 71 comprises a body 73, a plug 77, and a cap 76. The rear side 732 of the body 73 is liquid-tightly connected with the second branch connector 32. The body 73 is substantially cylindrical and has a rib 74 erected from the peripheral surface thereof.

The plug 77 is fitted on a front end 731 of the body 73. The cap 76 to cover the plug 77 is installed on the body 73 at its front side. A blood take-out port is formed at a front portion of the body 73 such that the blood take-out port is proximate to the plug 77.

The body 73 and the rib 74 are made of a hard material such as hard polyvinyl chloride, polycarbonate, polyester or the like.

The material composing the plug 77 is selected from materials into which a blood collecting needle can be pierced comparatively easily. For example, rubber materials such as natural rubber, isoprene rubber, butyl rubber, silicone rubber, urethane rubber, acrylic rubber, and butadiene rubber, styrene-butadiene rubber can be preferably

used.

As the material composing the cap 76, rubber materials such as natural rubber, isoprene rubber, butyl rubber, silicone rubber, urethane rubber, acrylic rubber, and butadiene rubber, styrene-butadiene rubber can be preferably used.

As shown in Fig. 4, a holder 82 of the vacuum blood collecting tube (vessel) 85 is connected with the sampling port 71 to allow an initial flow blood or an initial introduced blood (initial flow of collected blood) to be collected by the vacuum blood collecting tube 85 through the holder 82.

The vacuum blood collecting tube 85 comprises a body 86 and a rubber plug 87 fitted on the body 86. The interior of the vacuum blood collecting tube 85 is vacuum or in a pressure-reduced state.

The holder 82 comprises a cylindrical body 83 having a bottom and a double ended needle 84 provided coaxially with the body 83.

In this case, a member (lure adapter 841) having a male screw formed thereon is fixed to the double-headed needle 84. A female screw engaging the male screw is formed at the center of the bottom portion of the body 83 (left end of body 83 in Fig. 4). The double-headed needle 84 is removably fixed to the body 83 by engaging the male and female screws to each other.

The length of the double-headed needle 84 at its left side in Fig. 4 is so set that it can be pierced sufficiently into the plug 77. The length thereof at its right side is also so set that it can be pierced sufficiently into the rubber plug 87.

Although not shown in Fig. 4, it is possible to form an elastic covering member covering the double-headed needle 84 at least one side of the lure adapter 841 to prevent blood from leaking from the double-headed needle 84.

With reference to Figs. 1 and 4, the operation of the blood collecting apparatus 1, namely, the blood collecting method that is carried out by using the blood collecting apparatus 1 will be described below.

The blood collecting method is carried out by using a blood collecting apparatus 1 comprising a blood collecting needle 152; a blood collecting bag 10 for

accommodating collected blood; a first tube 15 whose one end communicates with the blood collecting bag 10 and other end communicates with the blood collecting needle 152; a branch portion 92 provided on a portion of the first tube 15; a second tube 91 connected with the branch portion 92 at one end thereof and having a blood take-out port 71; and a flexible resin bag 20 having a third tube 31 communicating with the second tube.

The blood collecting method comprises the step of piercing a blood collecting needle into a donor when a portion of the first tube is positioned between the branch portion and the blood collecting bag is sealed; the step of removing air inside the first and second tubes by introducing an initial flow of blood (initial introduced blood) from the donor into a portion of the first tube between the blood collecting needle and the branch portion and into the second tube and by accommodating air inside the portion of the first tube positioned between the blood collecting needle and the branch portion and air inside the second tube in the flexible resin bag; the step of sampling a predetermined amount of blood from the initial flow of blood by using the blood take-out port; and the step of collecting a predetermined amount of blood by intercepting communication between the first tube and the flexible resin bag and by communicating the portion of the first tube between the blood collecting needle and the branch portion with a portion of the first tube between the branch portion and the blood collecting bag.

Initially, the step of piercing the blood collecting needle 152 into a donor is performed in the condition that a portion of the first tube (first tube 15b at the side of blood collecting bag 10) positioned between the branch portion (first branch connector 92) and the blood collecting bag 10 is sealed and the first tube 15a is communicated to the flexible resin bag 20.

More specifically, as shown in Fig. 1, the first tube 15 (first tube 15b at the side of blood collecting bag 10) is sealed with the clamp 16 to close (intercept) the duct thereof. The clamp 33 is opened to open the duct of the third tube 31.

Then, the blood collecting needle 152 is pierced into the vein (blood vessel) of the donor. When it is confirmed that the blood collecting needle 152 is in the vein, the

hub 151 is fixed with a tape. Then, to open the duct of the sealing member 93, the breakable portion 933 of the sealing member 93 is broken to separate the solid columnar body 932 from the cylindrical body 931.

After completing the needle-piercing step, the step of removing air from the tubes is performed. That is, an initial flow of blood from the donor is introduced into the portion of the first tube (first tube 15a at the side of the blood collecting needle 152) between the blood collecting needle 152 and the branch portion (the first branch connector 92) and into the second tube 91 to accommodate the air inside the portion of the first tube (first tube 15a at the side of the blood collecting needle 152) positioned between the blood collecting needle 152 and the branch portion 92 and the air inside the second tube 91 in the flexible resin bag 20.

More specifically, by carrying out the needle-piercing step, the initial flow of the collected blood is introduced into the second tube 91 through the blood collecting needle 152, a part of the first tube 15 (the first tube 15a at the side of the blood collecting needle 152) and the first branch connector 92, thus flowing toward the sampling port 71. In this case, the duct of the first tube 15 is intercepted with the clamp 16. Thus, the blood flows from the first tube 15 (the first tube 15a at the side of the blood collecting needle 152) to the second tube 91 through the first branch connector 92. The blood is introduced into the second tube 91 by utilizing the pressure of the vein and locating the sampling port 71 and the bag 20 below the position at which the blood collecting needle 152 is pierced into the donor.

In introducing the collected blood into the second tube 91, the air inside a part of the first tube 15 (the first tube 15a at the side of the blood collecting needle 152), the air inside the second tube 91, and the air inside the first branch connector 92 flow into the third tube 31 through the second branch connector 32, thus being exhausted from one end of the third tube 31 and collected by the bag 20. In other words, decrease of the volume of the lumen of a part of the first tube 15 (first tube 15a at the side of the blood collecting needle 152) and the second tube 91 caused by the introduction of the blood thereinto, namely, increase in the pressure of the lumen of the first tube 15 and the

second tube 91 can be suppressed (restrained) by the expansion of the bag 20. That is, because the pressure inside the first tube 15 and the second tube 91 can be kept substantially constant, it is possible to prevent an excess load from being applied to blood cells. Thus, it is possible to prevent the blood from hemolyzing. Further, it never happens that the blood flows into the first branch connector 92 at the side of the clamp 16.

After the step of removing the air from the tubes is performed, the step of sampling blood from the initial flow of blood is performed. That is, the step of sampling a predetermined amount of blood from the blood take-out port (sampling port 71) is performed. In the step of sampling blood, it may be sampled from a part of the initial flow of blood or blood including all of the initial flow of blood.

More specifically, when the blood has reached proximately to the second branch connector 32, the third tube 31 is sealed with the clamp 33 to close (intercept) the duct thereof thereby to stop the introduction of the blood.

Then, as shown in Figs. 3 and 4, the cap 76 is removed from the body 73 of the sampling port 71. Then, the double-headed needle 84 of the holder 82 is pierced into the plug 77 of the sampling port 71 and penetrated therethrough to install the holder 82 on the sampling port 71.

Then, to sample or collect blood from the initial flow of blood, the vacuum blood collecting tube 85 is inserted into the innermost portion of the holder 82 and pressed thereinto, and the double-headed needle 84 of the holder 82 is pierced through the rubber plug 87. As a result, the blood is sucked into the vacuum blood collecting tube 85 and collected thereby. In this case, the interior of the first tube 15 (the first tube 15a at the side of the blood collecting needle 152) and that of the second tube 91 both positioned between the blood collecting needle 152 and the sampling port 71 are mostly filled with the blood. Thus, when the double-headed needle 84 of the holder 82 is pierced through the rubber plug 87 of the vacuum blood collecting tube 85 to suck the blood into the vacuum blood collecting tube 85, an excess load can be prevented from being applied to blood cells. Thus, it is possible to prevent the blood from hemolyzing, and further,

it never happens that the blood flows into the first branch connector 92 at the side of the clamp 16.

When the sampling of the initial flow of blood into the first vacuum blood collecting tube 85 is completed, the vacuum blood collecting tube 85 is extracted from the holder 82. Then, as necessary, the next vacuum blood collecting tube 85 is inserted through the holder 82 and pressed into the innermost portion of the holder 82. Then, the double-headed needle 84 of the holder 82 is pierced into the rubber plug 87 and penetrated therethrough. As a result, the blood is sucked into the vacuum blood collecting tube 85 and collected thereby. This operation is repeated to collect the initial flow of blood into a necessary number of the vacuum blood collecting tubes 85.

After the blood collecting into the vacuum blood collecting tube 85, i.e., after the collecting of the initial flow of blood into the vacuum blood collecting tubes 85 terminates, the holder 82 is removed from the sampling port 71, and then, the cap 76 is installed on the body 73 of the sampling port 71.

Because the plug 77 is fitted on the body 73 of the sampling port 71, the plug 77 prevents leaking of the blood.

After the step of sampling blood from the initial flow of blood terminates, the communication between the first tube 15 and the flexible resin bag 10 is intercepted, the main blood collecting step is performed. That is, a predetermined amount of blood is collected by communicating the first tube 15a with the portion of the first tube (the first tube 15b at the side of the blood collecting bag 10) positioned between the first branch portion 92 and the blood collecting bag 10.

More specifically, the step of collecting the blood into the blood collecting bag 10 is started. The blood collection is performed by using a blood collecting device of decompression type or by locating the blood collecting bag 10 at a position below the position at which the blood collecting needle 152 is pierced into the donor, namely, by utilizing the difference between the levels of the two positions.

In this case, the clamp 16 is opened to open the duct of the first tube 15. Consequently, the blood of the donor flows through the first tube 15, thus being

introduced into the blood-accommodating portion 13 of the blood collecting bag 10.

After a predetermined amount of blood is collected, the blood collecting needle 152 is removed from the blood vessel of the donor. Then, the cap 153 is installed on the hub 151. If necessary, the second tube 91 and the first tube 15 are fused, respectively with tube sealer or the like. Then, sealed portions of the first and second tubes 15 and 91 are cut off to remove the portion thereof located at the side of the sampling port 71. In this manner, it is possible to obtain the blood collecting bag 10 accommodating the blood not containing the initial flow of blood.

In the case of the above-described bag-connected device, the blood accommodated in the blood collecting bag 10 is centrifuged to separate it into a plurality of blood components such as red blood cells, buffy coat, and blood plasma. Then, the obtained blood components are delivered to a predetermined blood component bag connected with the blood collecting bag 10, according to the normal procedure.

The initial flow of blood collected in the vacuum blood collecting tube 85 is discarded or can be used for biochemical examinations of blood serum and examinations of the antibody for virus (for example, AIDS, hepatitis and the like) of infectious disease.

As described above, according to the blood collecting apparatus 1, it is possible to collect not containing an initial part of the initial flow of blood having a probability of microbism easily and reliably. Thus, the blood collecting apparatus 1 prevents inclusion of bacteria into collected blood or respective components separated from the collected blood, thus having a high degree of safety.

If the blood collecting apparatus 1 does not have the second branch connector 32, the third tube 31, the clamp 33, and the bag 20, there is a possibility that some of the initial flow of blood flows into the first branch connector 92 at the side of the clamp 16 and is left therein. In this case, the blood remaining there may enter into the vacuum blood collecting tube 85 when the main blood collecting is carried out.

The main reason for the penetration of the blood into the first branch connector 92 at the side of the clamp 16 is as follows: Let it be supposed that the blood collecting

apparatus 1 does not have the bag 20. In this case, in the collecting of the initial flow of blood into the vacuum blood collecting tube 85 by introducing it into the second tube 91, the air inside the first tube 15a and the second tube 91 has nowhere to escape and thus cannot be exhausted to the outside. Thus, the interior of the portion of the first tube 15 and the second tube 91 located between the blood collecting needle 152 and the sampling port 71 cannot be filled with the blood, which causes the interface between the air and the blood is stopped at a portion of the first tube 15 or the second tube 91. When the vacuum blood collecting tube 85 is installed on the holder 82 in this state, the air inside the first tube 15 and the second tube 91 is sucked into the vacuum blood collecting tube 85 immediately after the vacuum blood collecting tube 85 and the sampling port 71 communicate with each other. As a result, the duct of the first tube 15 and that of the second tube 91 become decompressed rapidly. To restore the decompressed state inside the circuit to a normal pressure, the inside of the circuit is filled with the blood. At this time, the blood also flows into the first branch connector 92 at the side of the clamp 16.

Because the blood collecting apparatus 1 has the second branch connector 32, the third tube 31, the clamp 33, and the bag 20, the blood is prevented from being introduced into the first branch connector 92 at the side of the clamp 16, as described above. Thus, it is possible to eliminate the initial flow of blood reliably.

If the blood collecting apparatus 1 does not have the second branch connector 32, the third tube 31, the clamp 33, and the bag 20, the blood introduced into the vacuum blood collecting tube 85 may be hemolyzed. The hemolysis may cause sodium and potassium contained in blood serum to be measured at a low accuracy.

The cause of the occurrence of the hemolysis is as follows: As described above, let it be supposed that the blood collecting apparatus 1 does not have the bag 20. In this case, in the collecting of the initial flow blood into the vacuum blood collecting tube 85 by introducing it into the second tube 91, the interior of the portion of the first tube 15 and the second tube 91 located between the blood collecting needle 152 and the sampling port 71 cannot be filled with the blood. When the vacuum blood collecting

tube 85 is installed on the holder 82 in this state, the air inside the first tube 15 and the air inside the second tube 91 are sucked into the vacuum blood collecting tube 85 immediately after the vacuum blood collecting tube 85 and the sampling port 71 communicate with each other. As a result, the duct of the first tube 15 and that of the second tube 91 become decompressed rapidly. At this time, the first tube 15 and the second tube 91 are crushed, depending on the position of the blood collecting needle 152, the degree of softness of blood vessel, and the like. As a result, the sectional area of the duct of the first tube 15 and that of the second tube 91 are reduced and negative pressure is comparatively large (sucking-caused moving speed of blood is comparatively large). Consequently, cells and in particular red blood cells of the collected initial flow of blood are damaged.

Because the blood collecting apparatus 1 has the second branch connector 32, the third tube 31, the clamp 33, and the bag 20, the blood is prevented from being hemolyzed, as described above.

It is normal to collect the initial flow of blood by sequentially providing the holder 82 with a plurality of the vacuum blood collecting tubes 85. If the blood collecting apparatus 1 does not have the second branch connector 32, the third tube 31, the clamp 33, and the bag 20, the first vacuum blood collecting tubes 85 has a smaller amount of the initial flow of blood than a predetermined collectable amount (maximum amount of initial flow of blood to be collected by sucking in decompressed state). The shortage of the amount of the initial flow of blood affects the number of items to be examined, examination accuracy, and workability in examination adversely.

The main reason for the shortage of the amount of the initial flow of blood is as follows: Let it be supposed that the blood collecting apparatus 1 does not have the bag 20. In this case, in the collecting of the initial flow of blood into the vacuum blood collecting tube 85 by introducing it into the second tube 91, the air inside the first tube 15a and the second tube 91 cannot be exhausted to the outside. Thus, the interior of the portion of the first tube 15 and the second tube 91 located between the blood collecting needle 152 and the sampling port 71 cannot be filled with the blood. When the vacuum

blood collecting tube 85 is installed on the holder 82 in this state, the air inside the first tube 15 and the air inside the second tube 91 are sucked into the vacuum blood collecting tube 85 and collected thereby.

The blood collecting apparatus 1 has the second branch connector 32, the third tube 31, the clamp 33, and the bag 20. Thus, as described previously, the initial flow of blood can be introduced into the first vacuum blood collecting tube 85, with the interior of the portion of the first tube 15 and the second tube 91 located between the blood collecting needle 152 and the sampling port 71 being filled with blood. Further, when the vacuum blood collecting tube 85 is installed on the holder 82, the third tube 31 is sealed with the clamp 33 to intercept the duct thereof. Therefore, it is possible to prevent the air inside the bag 20 and the air inside the portion of the third tube 31 located between the clamp 33 and the bag 20 from being introduced into the vacuum blood collecting tube 85 and thus allow the amount of the initial flow of blood which is introduced into the first vacuum blood collecting tubes 85 to be substantially equal to the predetermined collectable blood amount.

Further, because the blood collecting apparatus 1 has the sealing member 93 provided on the second tune 91, it is possible to select the time at which a collected initial flow of blood starts to flow toward the second tube 91. Thus, according to an instrument to be connected with, installed on or inserted into the sampling port 71, the collected initial flow of blood can flow through the second tube 91 at an appropriate time.

Further, the blood collecting apparatus 1 has the sealing member 93 serving as the second duct-sealing member. The sealing member 93 has a higher degree of operability than a clamp and a forceps.

Further, the blood collecting apparatus 1 has the clamp 16 serving as the first duct-sealing member. The clamp 16 has a higher degree of operability than other sealing members.

As described previously, the inner diameter of the second tube 91 is set comparatively small (0.5 - 2.0mm), and the thickness thereof is set comparatively large

(the outer diameter thereof to 2 - 4 times as large as the inner diameter thereof) to prevent the second tube 91 from being deformed (crushed) at the time of high pressure-steam sterility.

The second embodiment of the blood collecting apparatus of the present invention will be described below.

The blood collecting apparatus 1a of the second embodiment comprises a blood collecting needle 152 for collecting blood from a donor; a blood collecting bag 10 for accommodating collected blood; a first tube 15 (15a, 15b) whose one end communicates with the blood collecting bag 10 and other end communicates with the blood collecting needle 152; a branch portion 92 provided on a portion of the first tube 15; a second tube 91 connected with the branch portion 92 at one end thereof and having a blood take-out port at the other end thereof; and a filter 41 gas-permeable and blood-impermeable and communicable with an interior of the second tube 91.

Fig. 5 is a plan view showing the second embodiment of the blood collecting apparatus of the present invention. Description of constructions of the blood collecting apparatus of the second embodiment the same as those of the blood collecting apparatus of the first embodiment is omitted herein. Thus, only the constructions of the blood collecting apparatus of the second embodiment different from those of the blood collecting apparatus of the first embodiment will be described below.

As shown in Fig. 5, in a blood collecting apparatus 1a, a filter 41 is provided at one end of the third tube 31, instead of the flexible resin bag 20 of the blood collecting apparatus 1. The filter 41 gas-permeable and blood-impermeable and communicable with the interior of the second tube 91 is capable of exhausting air inside the first tube 15a at the side of the blood collecting needle 152 and air inside the second tube 91 when the blood collecting apparatus 1a is used. Other constructions of the blood collecting apparatus 1a are similar to those of the blood collecting apparatus 1.

Fig. 6 is a sectional view showing an example of the construction of the filter 41 of the blood collecting apparatus 1a.

As shown in Fig. 6, the filter 41 comprises a tubular body 42 and a cylindrical

filter member 43 gas-permeable (ventilative) and blood-impermeable. An end of the third tube 31 is liquid-tightly connected with the lower side of the tubular body 42 in Fig. 6. The filter member 43 is fitted into an upper portion of the tubular body 42 in Fig. 6. The tubular body 42 is made of a hard material such as polycarbonate or the like. The filter member 43 can be made of a sintered material containing polyethylene, polypropylene or polyamide as its main component.

The operation (blood collecting method using the blood collecting apparatus) of the blood collecting apparatus 1a is similar to that of the blood collecting apparatus 1 except that in the blood collecting apparatus 1a, air is exhausted to the outside through the body 43 of the filter 41. The effect of the blood collecting apparatus 1a is also similar to that of the blood collecting apparatus 1.

With reference to Fig. 5, the operation of the blood collecting apparatus 1a, namely, the blood collecting method to be carried out by using the blood collecting apparatus 1a will be described below.

The second blood collecting method is carried out by using a blood collecting apparatus 1a comprising a blood collecting needle 152 for collecting blood from a donor; a blood collecting bag 10 for accommodating collected blood; a first tube 15 whose one end communicates with the blood collecting bag 10 and other end communicates with the blood collecting needle 152; a branch portion 92 provided on a portion of the first tube 15; a second tube 91 connected with the branch portion 92 at one end thereof and having a blood take-out port 71; and a filter 41 gas-permeable and blood-impermeable and communicable with an interior of the second tube.

The second blood collecting method comprises the steps of piercing a blood collecting needle into a donor when a portion of the first tube positioned between the branch portion and the blood collecting bag is sealed; exhausting air inside the first and second tubes from the filter by introducing an initial flow of blood from the donor into a portion of the first tube between the blood collecting needle and the branch portion and into the second; sampling blood from the initial flow of blood by using the blood take-out port; and collecting a predetermined amount of blood by intercepting

communication between the first tube and the filter and by communicating the portion of the first tube between the blood collecting needle and the branch portion with a portion of the first tube between the branch portion and the blood collecting bag.

The blood collecting needle-piercing step of the second embodiment is the same as that of the first embodiment. More specifically, as shown in Fig. 5, the first tube 15 (the first tube 15b at the side of the blood collecting bag 10) is sealed with the clamp 16 to close (intercept) the duct thereof. The clamp 33 is opened to open the duct of the third tube 31.

Then, the blood collecting needle 152 is pierced into the vein (blood vessel) of a donor. When it is confirmed that the blood collecting needle 152 is in the vein, the hub 151 is fixed with a tape. Then, to open the duct of the sealing member 93, the breakable portion 933 of the sealing member 93 is broken to separate the solid columnar body 932 from the cylindrical body 931.

After completing the needle-piercing step, the step of removing the air from the tubes is performed. That is, the blood (initial blood flow) of the donor is introduced into the portion of the first tube 15a and into the second tube 91 to exhaust air inside the first tube 15a and air inside the second tube 91 from the filter 41.

More specifically, the blood of the donor is introduced into the first tube (the first tube 15a at the side of the blood collecting needle) between the blood collecting needle 152 and the branch portion (first branch connector 92) and into the second tube 91 to exhaust the air inside the first tube (the first tube 15a at the side of the blood collecting needle 152) positioned between the blood collecting needle 152 and the branch portion 92 and the air inside the second tube 91 to the outside from the filter 41.

More specifically, by carrying out the needle-piercing step, the initial blood flow is introduced into the second tube 91 through the blood collecting needle 152, a part of the first tube 15 (the first tube 15a at the side of the blood collecting needle 152) and the first branch connector 92, thus flowing toward the sampling port 71. In this case, the duct of the first tube 15 is intercepted with the clamp 16. Thus, the blood flows from the first tube 15 (the first tube 15a at the side of the blood collecting needle 152) to the

second tube 91 through the first branch connector 92. The blood is introduced into the second tube 91 by utilizing the pressure of the vein and locating the sampling port 71 below the position at which the blood collecting needle 152 is pierced into the donor.

In introducing the initial blood flow into the second tube 91, the air inside a part of the first tube 15 (the first tube 15a at the side of the blood collecting needle), the second tube 91, and the first branch connector 92 flow into the third tube 31 through the second branch connector 32, thus being exhausted from the filter 41 positioned at the termination of the third tube. That is, because the air inside a part of the first tube 15 (the first tube 15a at the side of the blood collecting needle) and the air inside the second tube 91 are exhausted by the introduction of the blood thereinto, the pressure of the lumen of the first tube 15 and the second tube 91 do not increase. That is, because the pressure inside the first tube 15 and the second tube 91 can be kept substantially constant, it is possible to prevent an excess load from being applied to blood cells. Thus, it is possible to prevent the blood from hemolyzing. Further, it does not happen that the blood flows into the first branch connector 92 at the side of the clamp 16.

After the step of removing the air from the tubes is performed, the step of sampling blood from the initial blood flow is performed. That is, the step of collecting a predetermined amount of blood from the blood take-out port (sampling port 71) is performed. In the step of sampling blood, it may be sampled from a part of the initial blood flow or blood including all of the initial blood flow.

More specifically, when the blood has reached proximately to the second branch connector 32, the third tube 31 is sealed with the clamp 33 to close (intercept) the duct thereof thereby to stop the introduction of the blood.

Then, the cap 76 is removed from the body 73 of the sampling port 71. Then, the double-headed needle 84 of the holder 82 is pierced into the plug 77 of the sampling port 71 and penetrated therethrough to install the holder 82 on the sampling port 71.

Then, to collect an initial blood flow, the vacuum blood collecting tube 85 is inserted into the innermost portion of the holder 82 and pressed thereinto, and the double-headed needle 84 of the holder 82 is pierced through the rubber plug 87. As a

result, the blood is sucked into the vacuum blood collecting tube 85 and collected thereby. In this case, the interior of the first tube 15 (the first tube 15a at the side of the blood collecting needle 152) and that of the second tube 91 both positioned between the blood collecting needle 152 and the sampling port 71 are mostly filled with the blood. Thus, when the double-headed needle 84 of the holder 82 is pierced through the rubber plug 87 of the vacuum blood collecting tube 85 to suck the blood into the vacuum blood collecting tube 85, an excess load can be prevented from being applied to blood cells. Thus, it is possible to prevent the blood from hemolyzing, and further, it never happens that the blood flows into the first branch connector 92 at the side of the clamp 16.

When the collecting of the initial blood flow into the first vacuum blood collecting tube 85 is completed, the vacuum blood collecting tube 85 is extracted from the holder 82. Then, as necessary, the next vacuum blood collecting tube 85 is inserted through the holder 82 and pressed into the innermost portion of the holder 82. Then, the double-headed needle 84 of the holder 82 is pierced into the rubber plug 87 and penetrated therethrough. As a result, the blood is sucked into the vacuum blood collecting tube 85 and collected thereby. This operation is repeated to collect the initial blood flow introduced into a necessary number of the vacuum blood collecting tubes 85.

After the blood sampling into the vacuum blood collecting tube 85, i.e., after the collecting of the initial blood flow into the vacuum blood collecting tubes 85 terminates, the holder 82 is removed from the sampling port 71, and then, the cap 76 is installed on the body 73 of the sampling port 71.

Because the plug 77 is fitted on the body 73 of the sampling port 71, the plug 77 prevents leaking of the blood.

After the step of sampling blood from the initial blood flow terminates, the communication between the first tube 15 and the blood flexible resin bag 20 is intercepted and the blood collecting step is performed. That is, a predetermined amount of blood is collected by communicating the first tube 15a with the portion of the first tube (the first tube 15b at the side of the blood collecting bag 10) positioned between the branch portion and the blood collecting bag 10.

More specifically, a main blood collecting into the blood collecting bag 10 is started. The blood collecting is performed by using a blood collecting device of decompression type or by locating the blood collecting bag 10 at a position below the position at which the blood collecting needle 152 is pierced into the donor, namely, by utilizing the difference between the levels of the two positions.

In this case, the clamp 16 is opened to open the duct of the first tube 15. Consequently, the blood of the donor flows through the first tube 15, thus being introduced into the blood-accommodating portion 13 of the blood collecting bag 10.

After a predetermined amount of blood is collected, the blood collecting needle 152 is removed from the blood vessel of the donor. Then, the cap 153 is installed on the hub 151. If necessary, the second tube 91 and the first tube 15 are fused, respectively with tube sealer or the like. Then, sealed portions of the first and second tubes 15 and 91 are cut off to remove the portion thereof located at the side of the sampling port 71. In this manner, it is possible to obtain the blood collecting bag 10 accommodating the blood not containing the initial blood flow.

The third embodiment of the blood collecting apparatus of the present invention will be described below.

Fig. 7 is a plan view showing the third embodiment of the blood collecting apparatus of the present invention. Description of construction of the blood collecting apparatus of the third embodiment the same as those of the blood collecting apparatus of the first embodiment is omitted herein. Thus, only the construction of the blood collecting apparatus of the third embodiment different from those of the blood collecting apparatus of the first embodiment will be described below.

As shown in Fig. 7, the blood collecting apparatus 1b has a filter provided on the branch connector 32 and a sealable air vent 51 provided thereon. The blood collecting apparatus 1b does not have the third tube 31, the clamp 33, and the flexible resin bag 20 unlike the blood collecting apparatus 1 of the first embodiment. The other constructions of the blood collecting apparatus 1b of the third embodiment are similar to those of the blood collecting apparatus 1 of the first embodiment.

Fig. 8 is a sectional view showing an example of the sealable air vent 51 for use in the blood collecting apparatus 1b of the present invention.

As shown in Fig. 8, the air vent (filter) 51 comprises a vent adapter 52, an adapter cap 53, a vent filter (filter body) 54 gas-permeable (ventilative) and blood-unpermeable, and a vent cap 55.

The vent adapter 52 is cylindrical and has a projection 521 formed on a rotational shaft of the cylinder. The projection 521 is pressed into the second branch connector 32.

The disk-shaped vent filter 54 is provided on the upper surface of the vent adapter 52 at the side (upper side in Fig. 8) not provided with the projection 521 such that the vent filter 54 seals the vent adapter 52. The adapter cap 53 is installed on the periphery of the vent filter 54.

The adapter cap 53 is disk-shaped and has an air-permeable hole 531 at its center to allow air to pass between the inner space of the second branch connector 32 and the outside through the vent filter 54.

A projection 551 which engages the hole 531 when the vent cap 55 is installed on the vent adapter 52 is formed at the center of the vent cap 55. When the projection 551 engages the hole 531, a third duct (duct communicating with the inside of the second tube and the outside through the air vent 51) is intercepted.

That is, when the vent cap 55 is installed on the vent adapter 52 (the vent cap 55 is closed), the third duct is intercepted. When the vent cap 55 is removed from the vent adapter 52 (the vent cap 55 is opened), the third duct is opened. The third duct is constituted of a hollow portion (duct) between the branch point of the second branch connector 32 and a position immediately prior to the vent cap 55 of the air vent 51. The vent cap 55 constitutes a third duct-sealing member. The air vent (filter) 51 constitutes a main portion of the pressure buffering means.

As the vent filter 54, it is possible to use various kinds of membrane filters such as a membrane filter consisting of a polyester resin coated with polyvinyl chloride, a membrane filter consisting of polytetrafluoroethylene laminated on or coating nonwoven cloth of polyethylene, a membrane filter consisting of an acetate film coated with

silicone resin, and the like.

The operation (blood collecting method using the blood collecting apparatus) of the blood collecting apparatus 1b is similar to that of the blood collecting apparatus 1a except that in the blood collecting apparatus 1b, the vent cap 55 of the air vent (filter) 51 is opened and closed in the blood collecting apparatus 1b whereas in the blood collecting apparatus 1a, the clamp 33 of the blood collecting apparatus 1a is opened and closed and that in the blood collecting apparatus 1b, air is exhausted to the outside through the vent filter 54 of the air vent.

The effect of the blood collecting apparatus 1b is also similar to that of the blood collecting apparatus 1.

The blood collecting apparatus of the present invention and the blood collecting methods thereof using each blood collecting apparatus have been described with reference to the drawings. The present invention is not limited to the embodiments, but the construction of each part of the blood collecting apparatus of each embodiment can be replaced with a part having a desired construction provided that it has the same function as that of each part of the blood collecting apparatus of each embodiment.

For example, as shown in Fig. 9 showing a blood collecting apparatus 1f of the fourth embodiment, the second duct may be provided with a check valve 94 (reverse flow prevention member).

Fig. 10 is a vertical sectional view showing an example of the construction of the check valve 94. Fig. 11 is a sectional view taken along a line A-A of Fig. 10. In the description made below, the right side in Figs. 10 and 11 is referred to as "front side " and the left side therein is referred to as "rear side".

As shown in Figs. 10 and 11, the check valve 94 comprises a short tube 940 composed of a flexible resin such as soft polyvinyl chloride and a body 941 made of an elastic material. The body 941 is liquid-tightly inserted into the short tube 940 and fixed thereto.

The front end of the short tube 940 is liquid-tightly connected with the sampling port 71. The rear end of the short tube 940 is liquid-tightly connected with the second

branch connector 32.

The body 941 has a hollow portion 942 communicating with the second branch connector 32 and forming a part of the blood duct of the check valve 94. A tapered surface 943 is formed on the front end of the hollow portion 942. That is, the vertical length (L) of the front side of the hollow portion 942 decreases gradually from the rear side toward the front side.

A pair of plate-shaped opening/closing members 944 and 944 is formed at the front end of the body 941. The opening/closing members 944 and 944 are in close contact with each other owing to their elastic and restoring forces, thus closing the duct of the check valve 94. When blood flows from the front side to the rear side, the pressure of the blood is applied to the peripheral surface of the opening/closing members 944 and 944, thus acting to bring them into contact each other closely. Thus, the blood does not flow from the front side to the rear side.

When blood flows from the rear side to the front side, a predetermined pressure of the blood is applied to the front end of the tapered surface 943, thus acting to move the opening/closing members 944 and 944 away from each other. As a result, the duct of the check valve 94 is opened, thus flowing the blood from the rear side to the front side

As the material composing the body 941, rubber materials such as natural rubber, isoprene rubber, butyl rubber, silicone rubber, urethane rubber, acrylic rubber, and butadiene rubber, styrene-butadiene rubber can be preferably used.

The check valve 94 prevents a reverse flow of blood. That is, the blood does not flow from the sampling port 71 toward the first branch connector 92, but from the first branch connector 92 toward the sampling port 71.

In the present invention, the position of the check valve 94 is not limited to a specified position as long as it is positioned on the second duct. As described above, it is favorable that the check valve 94 is positioned at the side of the sampling port 71 with respect to the second branch connector 32. It is more favorable that the check valve 94 is positioned between the second branch connector 32 and the sampling port 71.

When the check valve 94 is installed at the above-described position, the check valve 94 does not constitute a pressure drag when blood is flowed to a position proximate to the second branch connector 32. Thus, the check valve 94 allows the introduction of the blood to the bag 20 to be accomplished smoothly.

As shown in Figs. 12, 13, and 14, the first duct-sealing member may be composed of a sealing member 95 which can be broken to open the first duct. That is, the clamp 16 shown in Figs. 1, 5, and 7 may be replaced with the sealing member 95. As the sealing member 95 of the blood collecting apparatus 1c, 1d, and 1e, a member similar to the above-described sealing member 93 can be used.

In the present invention, the second tube 91 may be closed with a tube-closing member such as a clamp to intercept the duct (second duct). In this case, it is preferable that the tube-closing member is positioned between the first branch connector 92 and the sealing member 93.

It is possible that the second tube 91 is not provided with the sealing member 93 when the second tube 91 is provided with the tube-closing member.

In the present invention, in the construction shown in Figs. 1 and 5, it is possible to connect the sampling port 71 and the third tube 31 to the end of each branch of the second branch connector 32 reversely. That is, the third tube 31 may be connected with the end of the upper branch of the second branch connector 32 in Figs. 1 and 5 and the sampling port 71 may be connected with the end of the lower branch thereof in Figs. 1 and 5.

In the present invention, in the construction shown in Fig. 7, it is possible to connect the sampling port 71 and the air vent 51 to the end of each branch of the second branch connector 32 reversely. That is, the air vent 51 may be connected with the end of the upper branch of the second branch connector 32 in Fig. 7 and the sampling port 71 may be connected with the end of the lower branch thereof in Fig. 7.

In the present invention, the branch portions may be composed of a multi-plug such as a three-way plug instead of the branch connectors as shown in the drawings.

As described above, according to the blood collecting apparatus of the present

invention and the blood collecting method thereof, air inside the first tube 15 (first tube 15a at the side of the blood collecting needle 152) between the branch portion 92 and the blood collecting needle 152 and air inside the second tube 91 can be accommodated in the flexible resin or exhausted to the outside. Thus, an initial blood flow is prevented from being left in the branch portion between the first tube and the second tube at the side of the blood collecting bag. That is, it is possible to collect blood not containing a initial part of the initial blood flow having a probability of microbism easily and reliably from blood collected from a donor. Thus, it is possible to prevent inclusion of bacteria into the collected blood or respective components separated from the collected blood, thus having a high degree of safety.

As described above, because the blood collecting apparatus of the present invention has the pressure buffering means for restraining fluctuation of the pressure in the second duct, the initial blood flow is prevented from being left in the branch portion between the first tube and the second tube at the side of the blood collecting bag. That is, it is possible to remove the initial blood flow having a probability of microbism easily and reliably from blood collected from a donor. Therefore, it is possible to prevent inclusion of bacteria into the collected blood or respective components separated from the collected blood, thus having a high degree of safety.

When the initial blood flow is collected (when examining blood is collected), the pressure buffering means prevents (prevents cells in blood from being damaged, for example, hemolysis) an excess load from being applied to the blood, thus allowing the initial flow blood to be collected in a preferable state and preventing a collecting amount of the initial blood flow from being reduced.

## EXAMPLES

The examples of the blood collecting apparatus of the present invention will be described below.

Example 1

The blood collecting apparatus 1 shown in Fig. 1 was prepared. Two soft

polyvinyl sheets were used as the material of the flexible resin bag 20. They were laminated on each other and the peripheral edges thereof were fused to each other. The bag 20 had a capacity of 20ml. Using the blood collecting apparatus 1 and the method previously described, air inside the first tube 15a positioned at the side of the blood collecting needle and air inside the second tube 91 were introduced into the bag 20 by introducing an initial flow blood. Then, an initial part of the initial flow blood was collected in the vacuum blood collecting tube 85. Then, 200ml of blood was collected in the blood collecting bags 10. The blood sampling capacity of each vacuum blood collecting tube 85 was 10ml.

Example 2

The blood collecting apparatus 1a shown in Fig. 5 was prepared. The body 43 of the filter 41 provided on the third tube 31 was made of a sintered material containing polypropylene as its main component. Using the blood collecting apparatus 1a and the method previously described, air inside the first tube 15a positioned at the side of the blood collecting needle and air inside the second tube 91 were discharged from the filter by introducing an initial flow of blood. Then, an initial part of the initial flow blood was collected in the vacuum blood collecting tube 85. Then, 200ml of blood was collected by the blood collecting bag 10. The blood sampling capacity of each vacuum blood collecting tube 85 was 10ml.

Example 3

The blood collecting apparatus 1b shown in Fig. 7 was prepared. As the vent filter 54 of the air vent (filter) 51 provided at the second branch portion 32, a membrane filter made of polytetrafluoroethylene was used. Using the blood collecting apparatus 1b and the method previously described, air inside the first tube 15a positioned at the side of the blood collecting needle and air inside the second tube 91 were discharged through the vent filter 54 by introducing an initial flow of blood. Then, an initial part of the initial flow of blood was collected in the vacuum blood collecting tube 85. Then, 200ml of blood was collected by the blood collecting bag 10. The blood sampling capacity of each vacuum blood collecting tube 85 was 10ml.

Comparison Example 1

Except that a blood collecting apparatus did not have the second branch connector 32, the third tube 31, the clamp 33, and the flexible resin bag 20, the blood collecting apparatus had a construction similar to that of the embodiment 1. Using the blood collecting apparatus and a method similar to that of the embodiment 1 except the operation of clamp 33, an initial part of an initial flow of blood was collected in the vacuum blood collecting tube 85. Then, 200ml of blood was collected by the blood collecting bag 10. The blood sampling capacity of each vacuum blood collecting tube 85 was 10ml.

Comparison Example 2

Except that a blood collecting apparatus did not have the second branch connector 92, the second tube 91, the sealing member 93, the branch connector 32, the third tube 31, the clamp 33, and the flexible resin bag 20, the blood collecting apparatus had a construction similar to that of the embodiment 1. Using the blood collecting apparatus and a conventional method, 200ml of blood was collected by the blood collecting bag 10.

[Test]

In any of the first - third embodiments and comparison examples 1 and 2, a bacterium fluid of Yersinia enterocolitica (buffer and suspension of phosphoric acid, concentration: 100cfu/ml) was applied to a donor at a predetermined piercing portion thereof with swabs once a day for a week before blood was collected from them. The piercing portions of the donors were not washed for a week before blood was collected therefrom.

The following bacteria culture tests were conducted by using the blood collected in the blood collecting bags used in the first - third embodiments and comparison examples 1 and 2.

(Bacterium-culturing Test)

200ml of blood accommodated in the blood collecting bag 10 was mixed with a blood conservation liquid accommodated therein. Then, an operation adapter was

pierced into an opening 14 of the blood collecting bag 10. Using a syringe and a needle installed thereon, about 50ml of blood was aseptically collected from a rubber plug of the operation adapter. The blood was injected into glass containers accommodating a culture medium described below to culture it.

After culturing 25 blood samples (25 donors) in a condition described below, the number of the blood samples having bacteria was examined. The culture medium and the culture condition were as follows:

Culture medium: Brain Heart Infusion w/PAB and CO2, Under Vacuum (manufactured by Difco Corp.)

Culture amount: 50ml

Culture temperature: 25 - 30 C

Observation time period (culture time period): 10 days

The result of the bacterium culture test is shown in table 1 below.

Table 1

| | Number of blood samples (Number of donors) | Number of Bacterium-Detected Blood Samples |
|---|---|---|
| Example 1 | 25 | 0 |
| Example 2 | 25 | 0 |
| Example 3 | 25 | 0 |
| Comparison example 1 | 25 | 5 |
| Comparison example 2 | 25 | 5 |

In the first - third embodiments, in the introduction of an initial blood flow into each vacuum blood collecting tube, the tube in the range from the blood collecting needle to the sampling port was substantially filled with blood. Because the initial blood

flow was collected into each vacuum blood collecting tube installed on the holder, it did not occur that the blood flowed to the first branch connector 92 at the side of the clamp 16. Thus, blood collected from the donor did not contain the initial flow blood. Therefore, as indicated in table 1, the number of bacterium-detected blood samples was zero.

On the other hand, because in comparison example 2, collected blood contained the initial blood flow, many collected blood samples contained bacteria.

In comparison example 1, because air inside the tube could not be exhausted to the outside when an initial blood flow was introduced into a vacuum blood collecting tube, the tube in the range from the blood collecting needle to the sampling port could not be filled with the blood. Thus, immediately after the vacuum blood collecting tube was installed on the holder, the inside of the circuit was filled with blood to restore a decompressed state to a normal pressure state. At that time, in some cases, the initial flow of blood flowed into the first branch connector 92 at the side of the clamp 16, thus mixing with collected blood. Therefore, it was impossible to make the number of bacterium-detected blood samples zero.

[Hemolysis Test]

Table 2 indicates the degree of hemolysis (number of detected hemolysis) of each collected blood introduced into each vacuum blood collecting tube 85 and average values of the amounts of the initial flow blood introduced into the vacuum blood collecting tubes 85.

The degree of hemolysis of the initial flow of each collected blood was examined as follows: After blood coagulated, blood serum was centrifuged at 3000rpm for 10 minutes to visually observe the tone of each blood serum. According to the tone of red, the degree of hemolysis of the initial flow of each collected blood was determined by using the following three levels, namely, not hemolyzed (level 0), slightly hemolyzed (level 1), and hemolyzed (level 2).

* Not hemolyzed (level 0): Tone of red was not observed.

* Slightly hemolyzed (level 1): Tone of red was observed in a slight degree.

* Hemolyzed (level 2): Tone of red was observed.

"Slightly hemolyzed" (level 1) was also regarded as "hemolyzed" cases. The number of detected "hemolyzed" cases was determined.

Table 2

| | Number of Blood Samples (Donors) | Number of Hemolysis (Visual) | Sampling Blood Volume Average (GraduatedCylinder) |
|---|---|---|---|
| Example 1 | 25 | 0 | 9.8 ml |
| Example 2 | 25 | 0 | 9.8 ml |
| Example 3 | 25 | 0 | 9.8 ml |
| Comparison Example 1 | 25 | 2 | 6.5 ml |

In the first - third embodiments, in the introduction of an initial blood flow into each vacuum blood collecting tube, the tube in the range from the blood collecting needle to the sampling port was substantially filled with blood. Because the initial blood flow was collected into each vacuum blood collecting tube installed on the holder, an excess load was not applied to blood. Thus, the blood did not hemolyze as indicated in table 2 below. That is, in the first - third embodiments, slight degree of hemolysis (level 1) and hemolysis (level 2) were not observed.

In the first - third embodiments, in the introduction of the initial blood flow into each vacuum blood collecting tube, each vacuum blood collecting tube was installed on the holder, with the tube in the range from the blood collecting needle to the sampling port being substantially filled with blood. Thus, as indicated in table 2 below, the amount of the initial blood flow was not reduced.

On the other hand, in comparison example 1, hemolysis was observed. That is, slight hemolysis (level 1) was observed in two glass containers. In the comparison example 1, the inside of the tube in the range from the blood collecting needle to the

sampling port could not be filled with blood. Thus, immediately after the vacuum blood collecting tube was installed on the holder, air inside the tube was sucked thereinto. Consequently, the interior of the tube was decompressed and thus the tube was crushed. Thus, it is assumed that when blood flowed through the tube, red blood cells were damaged.

In comparison example 1, the initial blood flow was introduced into the vacuum blood collecting tube, without the inside of the tube in the range from the blood collecting needle to the sampling port being filled with blood. Thus, air inside the tube was sucked into the vacuum blood collecting tube and collected therein. Consequently, the amount of the initial flow of collected blood was reduced by 3.5ml corresponding to the spatial volume of the length (35cm) of the tube.

WHAT IS CLAIMED IS:

1. A blood collecting apparatus comprising:

a blood collecting needle for collecting blood from a donor;

a blood collecting bag for accommodating collected blood;

a first tube whose one end communicates with said blood collecting bag and other end communicates with said blood collecting needle;

a branch portion provided on a portion of said first tube;

a second tube connected with said branch portion at one end thereof and having a blood take-out port;

a flexible resin bag having a third tube communicating with said second tube and being capable of accommodating air inside a part of the first tube between said branch portion and said blood collecting needle and air inside said second tube, and

a duct-sealing member that is positioned between said branch portion and said blood collecting bag and capable of intercepting a duct inside said first tube and consists of a breakable sealing member which opens said duct of said first tube when said breakable sealing member is broken.

2. A blood collecting apparatus according to claim 1, wherein a capacity of said flexible resin bag is in the range of 1 - 100ml.

3. A blood collecting apparatus according to claim 1 or 2, further comprising a duct-sealing member capable of intercepting a duct inside said second tube.

4. A blood collecting apparatus according to claim 3, wherein said duct-sealing member consists of a breakable sealing member which opens said duct of said second tube when said breakable sealing member is broken or a clamp member which can be opened and closed.

5. A blood collecting apparatus according to any one of claims 1 through 3, further comprising a second branch portion provided on a portion of said second tube, wherein said third tube is connected with said second branch portion at one end thereof and connected with said flexible resin bag at other end thereof; and a duct-sealing member capable of intercepting a duct inside said third tube is provided on said third tube.

6. A blood collecting apparatus according to claim 5, wherein said duct-sealing member capable of intercepting said duct inside said third tube consists of a clamp member which can be opened and closed.

7. A blood collecting apparatus according to any one of claims 1 through 6, further comprising a reverse flow prevention member allowing a flow from said branch portion provided on said first tube to said blood take-out port and preventing a flow reverse to said flow from said branch portion to said blood take-out port.

8. A blood collecting apparatus according to any one of claims 1 through 7, wherein an area of a sectional surface of a duct inside said second tube is smaller than an area of a sectional surface of said duct inside said first tube.

9. A blood collecting apparatus according to any one of claims 1 through 8, wherein a needle of a blood collecting tool for a vacuum blood collecting tube can be pierced into said blood take-out port.

10. A blood collecting apparatus comprising:

a blood collecting needle for collecting blood from a donor;

a blood collecting bag for accommodating collected blood;

a first tube whose one end communicates with said blood collecting bag and other end communicates with said blood collecting needle;

a branch portion provided on a portion of said first tube;

a second tube connected with said branch portion at one end thereof and having a blood take-out port;

a filter gas-permeable and blood-impermeable and communicable with an interior of said second tube and being capable of exhausting air inside said first tube at the side of said blood collecting needle and air inside the second tube, and

a duct-sealing member that is positioned between said branch portion and said blood collecting bag and capable of intercepting a duct inside said first tube and consists of a breakable sealing member which opens said duct of said first tube when said breakable sealing member is broken.

11. A blood collecting apparatus according to claim 10, further comprising a duct-sealing member capable of intercepting a duct inside said second tube.

12. A blood collecting apparatus according to claim 11, wherein said duct-sealing member consists of a breakable sealing member which opens said duct of said second tubes when said breakable sealing member is broken or a clamp member which can be opened and closed.

13. A blood collecting apparatus according to any one of claims 10 through 12, further comprising a second branch portion provided on a portion of said second tube; and a third tube connected with said second branch portion at one end thereof, wherein said filter is provided on said third tube; and said third tube is provided with a duct-sealing member positioned in a region between said second branch portion and said filter and capable of intercepting a duct inside said third tube.

14. A blood collecting apparatus according to any one of claims 10 through 13, wherein said duct-sealing capable of intercepting said duct inside said third tube consists of a clamp member which can be opened and closed.

15. A blood collecting apparatus according to any one of claims 10 through 12, further comprising a second branch portion provided on a portion of said second tube, wherein said filter is installed on said second branch portion and has a cap for opening and closing said filter.

16. A blood collecting apparatus according to any one of claims 10 through 15, further comprising a reverse flow prevention member allowing a flow from said branch portion provided on said first tube to said blood take-out port and preventing a flow reverse to said flow from said branch portion to said blood take-out port.

17. A blood collecting apparatus according to any one of claims 10 through 16, wherein an area of a sectional surface of said duct inside said second tube is smaller than an area of a sectional surface of said duct inside said first tube.

18. A blood collecting apparatus according to any one of claims 10 through 17, wherein a needle of a blood collecting tool for a vacuum blood collecting tube can be pierced into said blood take-out port.

19. In a blood collecting apparatus comprising:

a blood collecting needle for collecting blood from a donor;

a blood collecting bag for accommodating collected blood;

a first duct whose one end communicates with said blood collecting bag and other end communicates with said blood collecting needle, and introducing said collected blood into said blood collecting bag;

a second duct branching from said first duct through a branch portion and having a blood take-out port; a pressure buffering means for suppressing fluctuation of a pressure of said second duct;

a first duct-sealing member capable of intercepting a portion of said first duct and consisting of a breakable sealing member which opens said first duct when said breakable sealing member is broken, and

said pressure buffering means is capable of accommodating or exhausting air inside a part of said first tube between said branch portion and said blood collecting needle and air inside said second tube.

20. A blood collecting apparatus according to claim 19, wherein said pressure buffering means has a flexible resin bag.

21. A blood collecting apparatus according to claim 20, wherein a capacity of said flexible resin bag is in the range of 1 - 100ml.

22. A blood collecting apparatus according to claim 20 or 21, wherein said pressure buffering means has a third duct branching from said second duct through a branch portion; and said bag member is provided at an end of said third duct.

23. A blood collecting apparatus according to claim 19, wherein said pressure buffering means has a filter gas-permeable and blood-impermeable.

24. A blood collecting apparatus according to claim 23, wherein said pressure buffering means has a third duct branching from said second duct through a branch portion; and said filter is provided to said third duct.

25. A blood collecting apparatus according to claim 22 or 24, further comprising a third duct-sealing member capable of intercepting said third duct.

26. A blood collecting apparatus according to any one of claims 19 through 25, further comprising a reverse flow prevention member allowing a flow from a branch portion from which said first duct and said second duct branch each other to said blood take-out port and preventing a flow reverse to said flow from said branch portion to said blood take-out port.

27. A blood collecting apparatus according to any one of claims 19 through 26, further comprising a second duct-sealing member capable of intercepting said second duct.

28. A blood collecting apparatus according to claim 27, wherein said second duct-sealing member has a breakable sealing member which opens said second duct when said breakable sealing member is broken.

29. A blood collecting apparatus according to any one of claims 19 through 28, wherein an area of a sectional surface of said second duct is smaller than an area of a sectional surface of said first duct.

FIG. 1

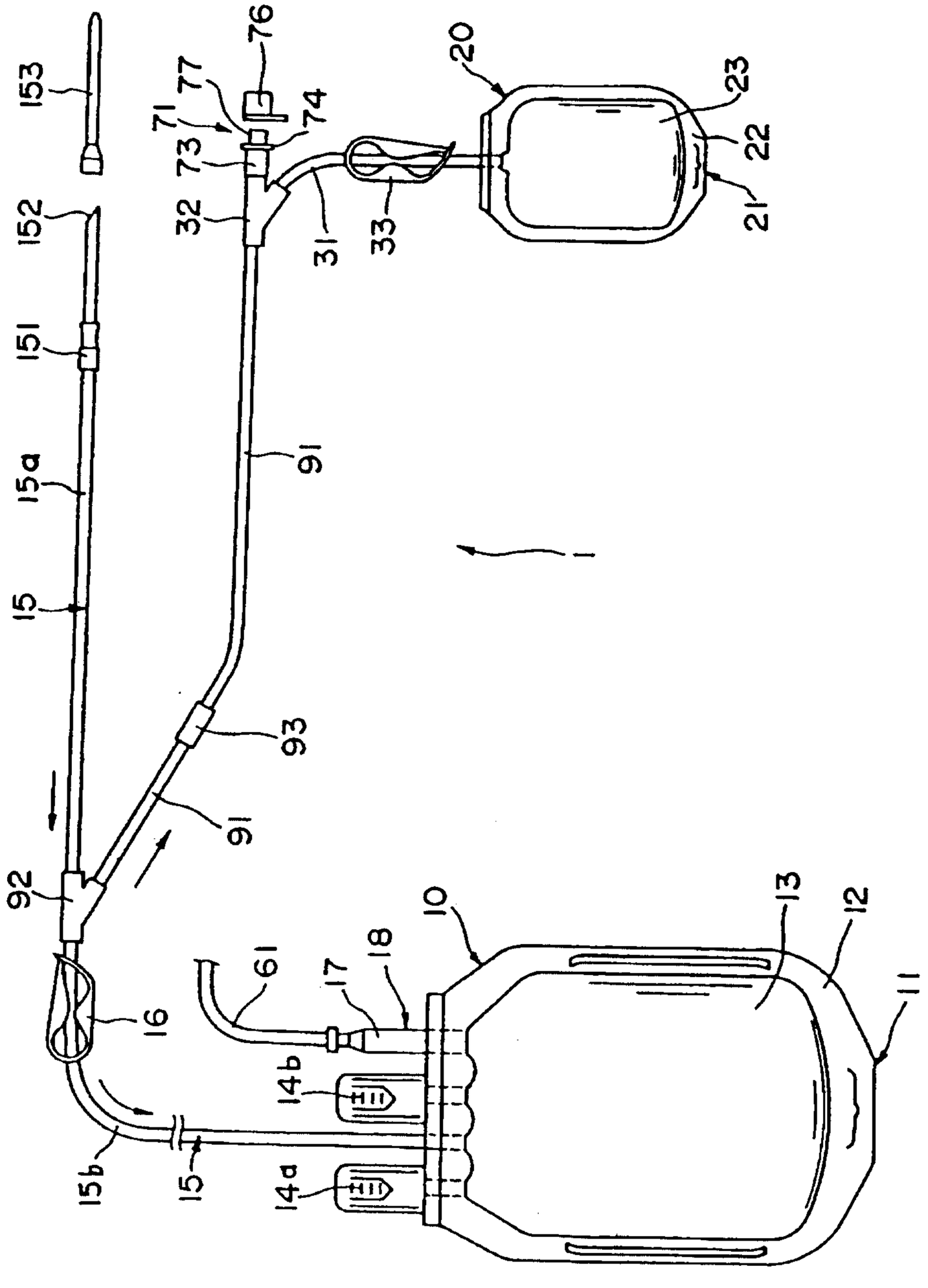
153
152
151
15a
15
92
91
93
91
32
71
77
76
74
73
31
33
20
23
22
21
16
61
17
18
10
13
12
11
14b
14a
15b
15

FIG. 2

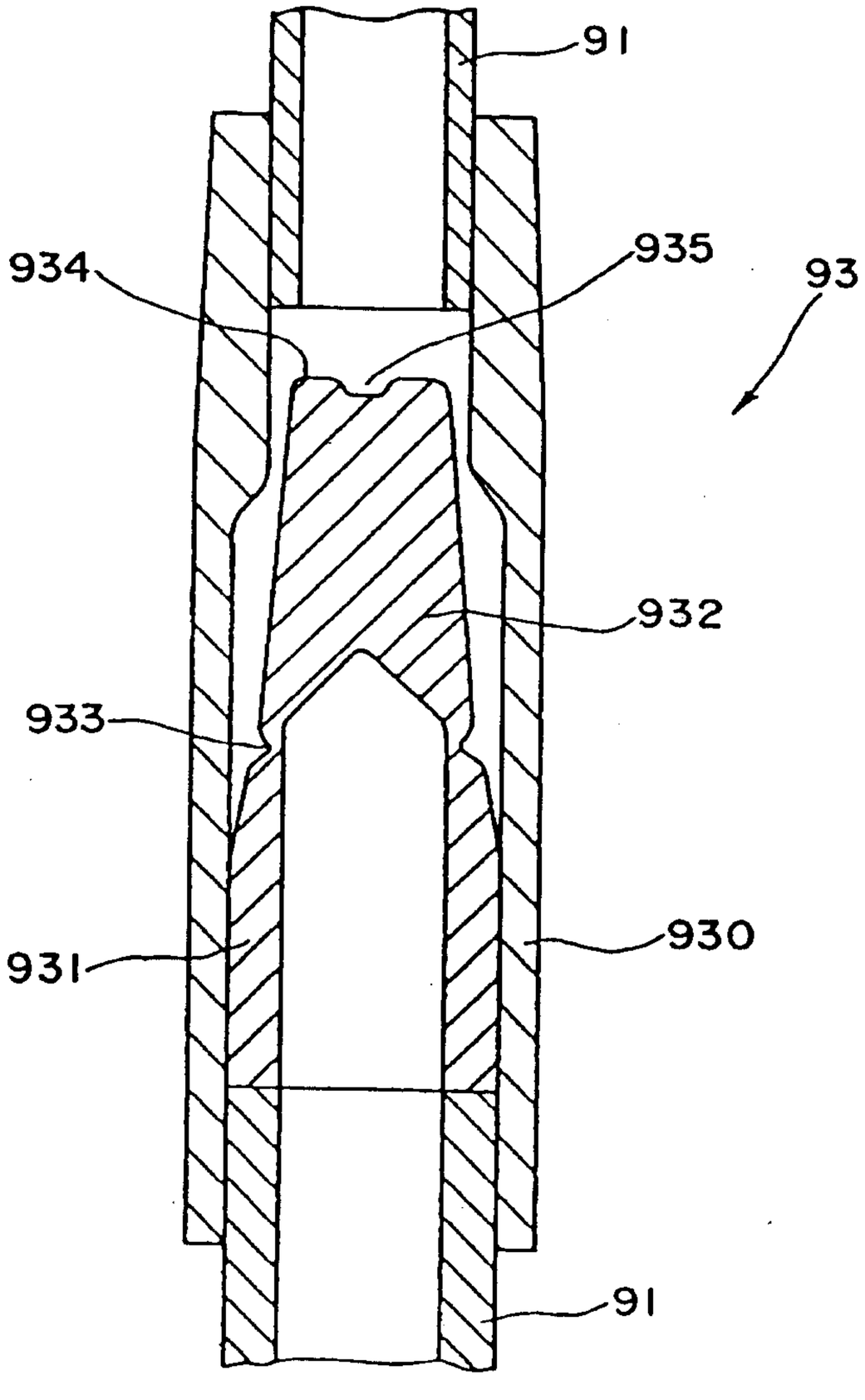

FIG. 3

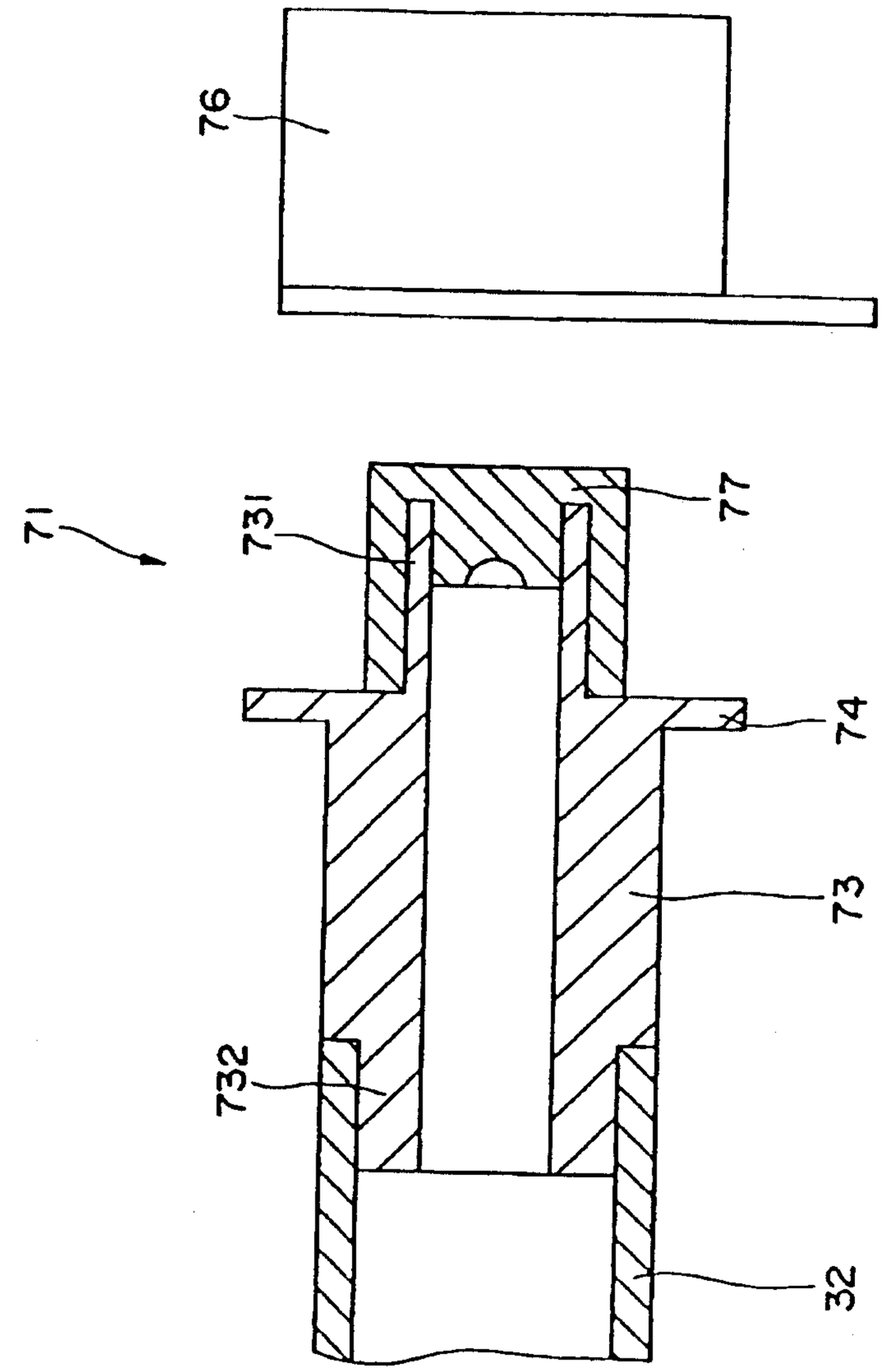

FIG. 4

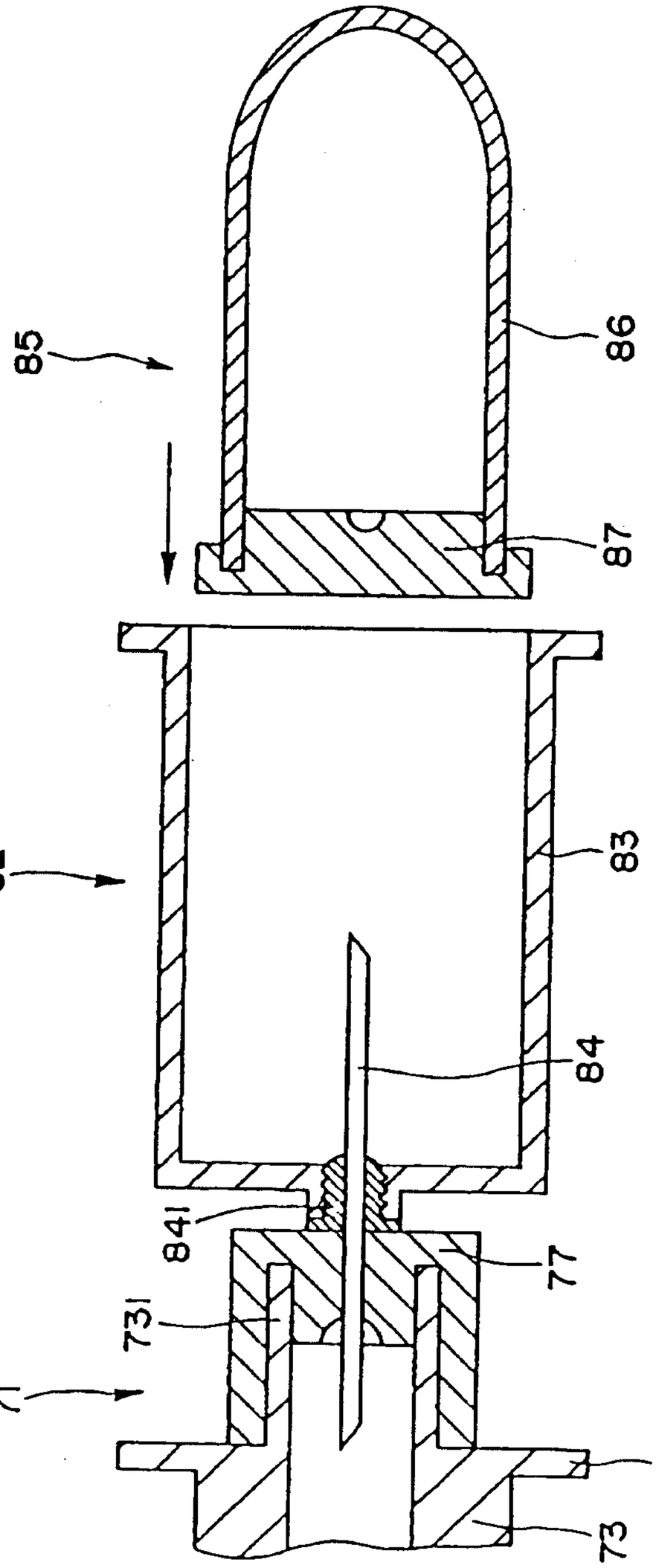

FIG. 5

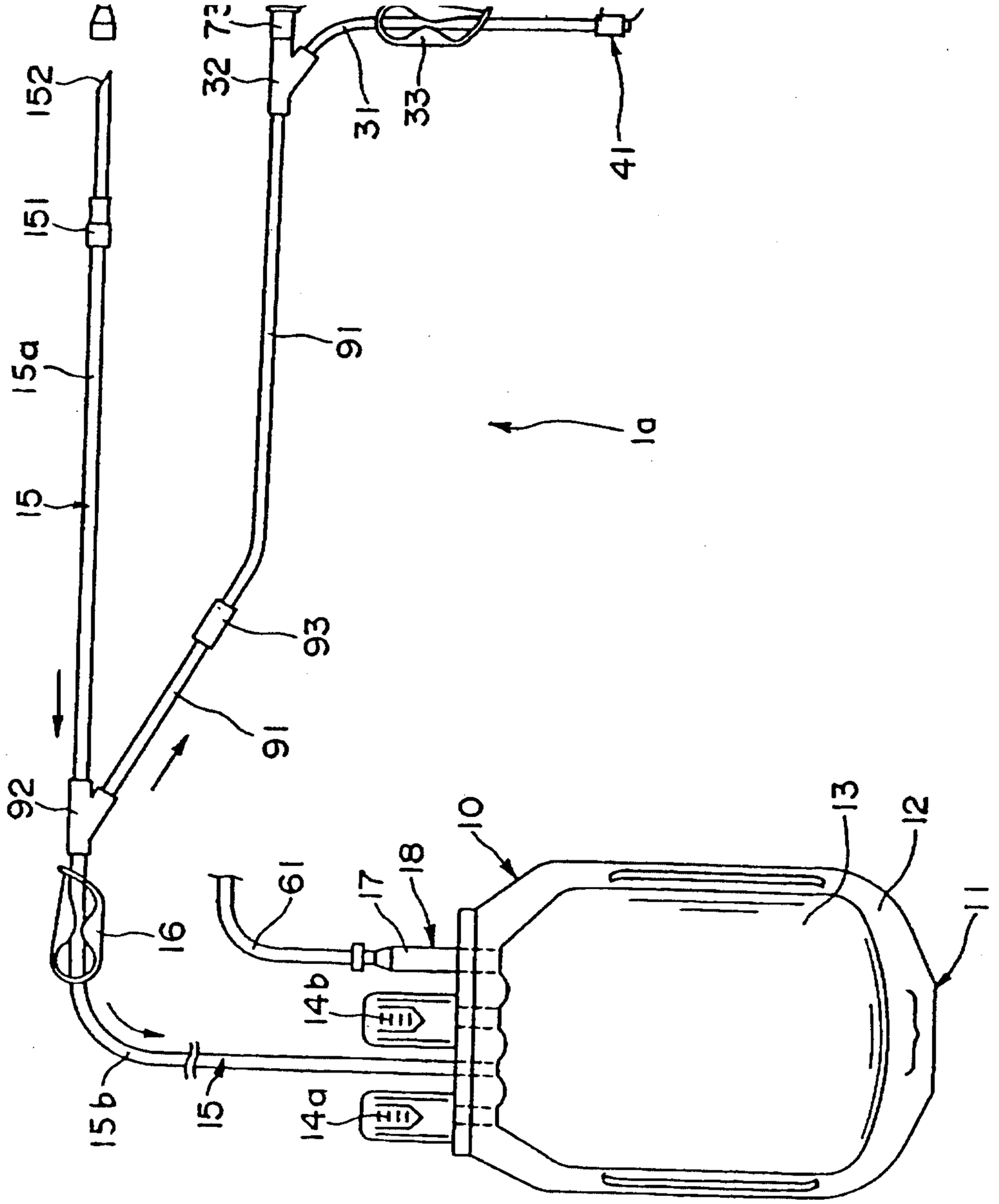
152
151
15a
15
92
16
15b
15
14a
14b
61
17
18
10
13
12
11
91
93
91
72
32
31
33
41
1a

FIG. 6

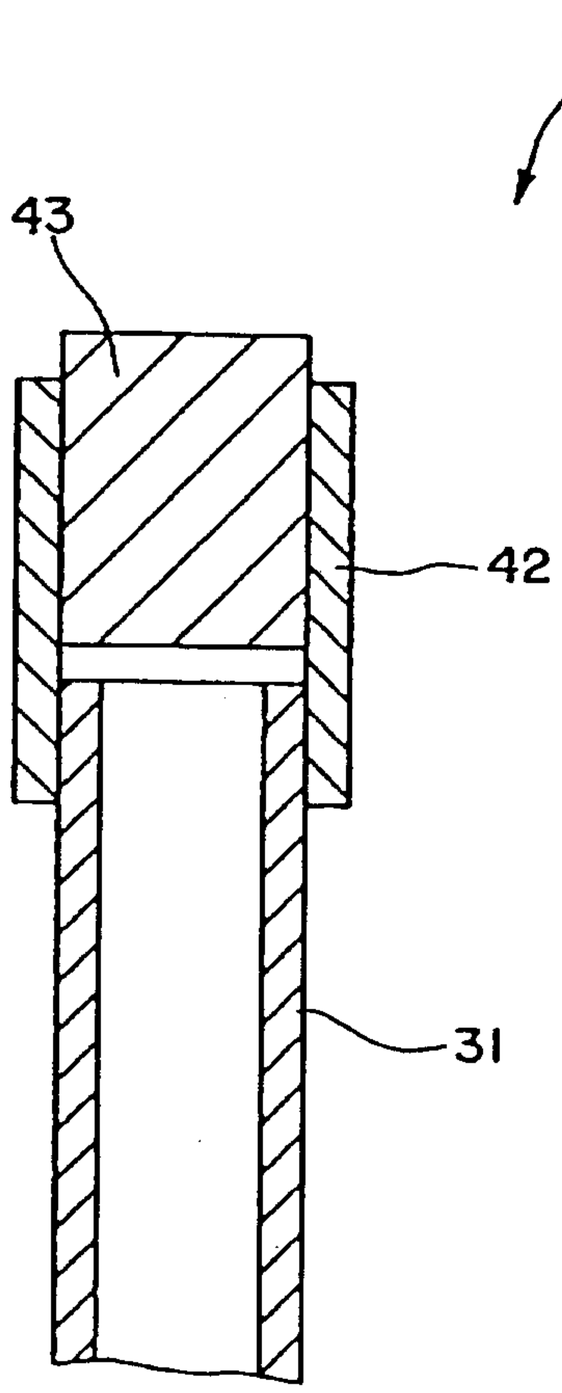

FIG. 7

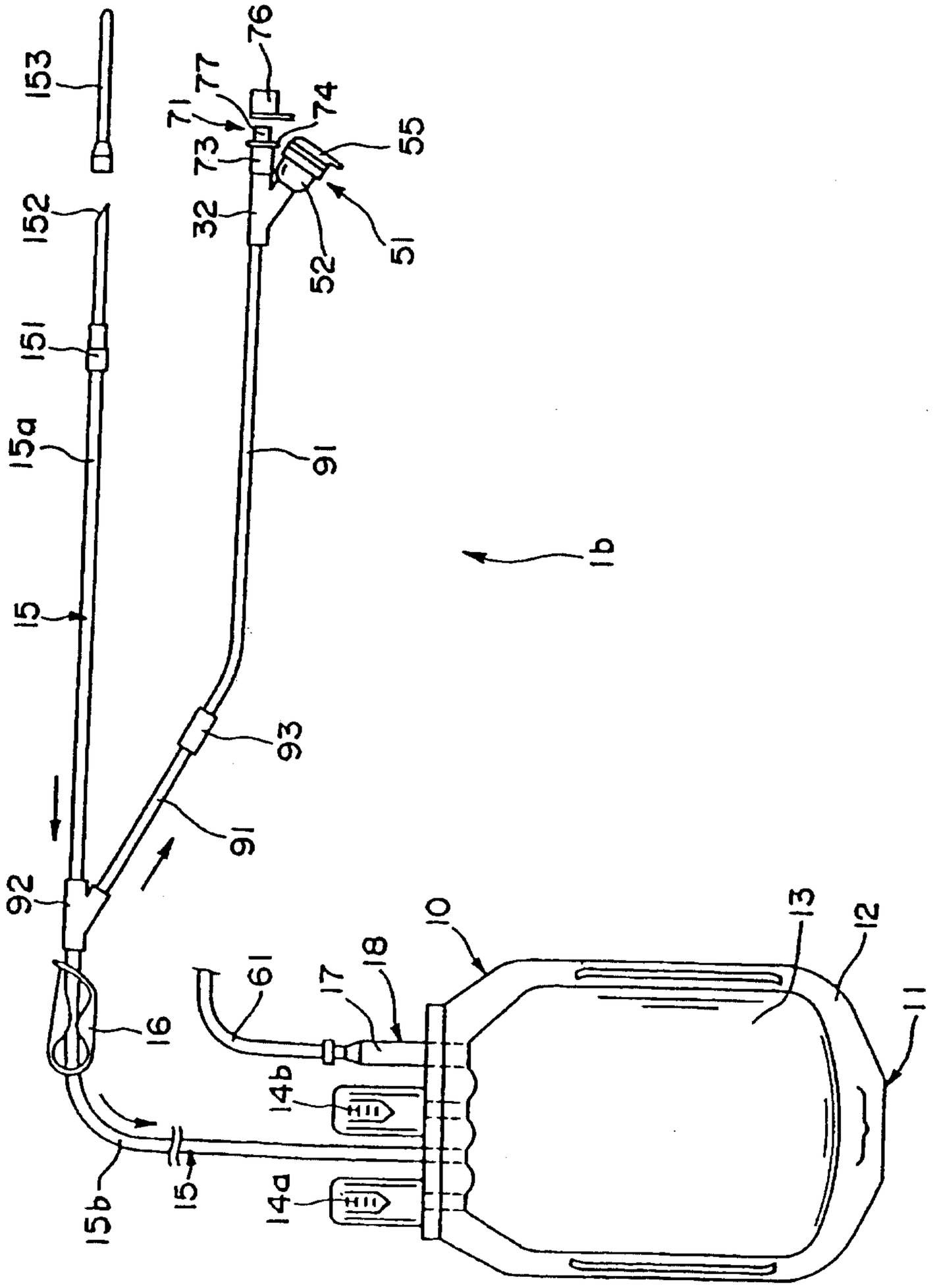
153
152
151
15a
15
92
93
91
71
77
76
74
73
55
32
52
51
91
1b
10
13
12
11
61
17
18
16
14b
14a
15b
15

FIG. 8

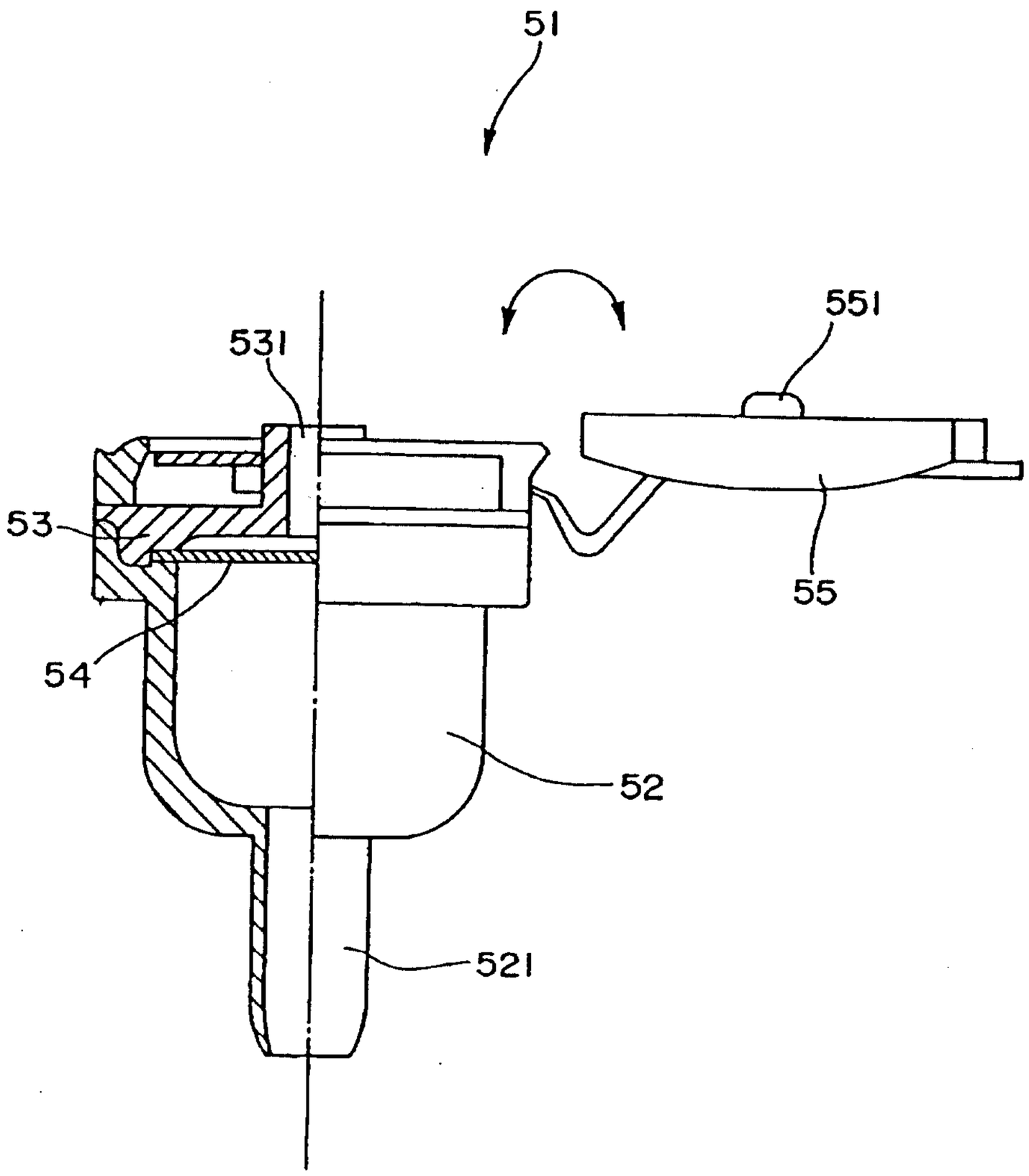

FIG. 9

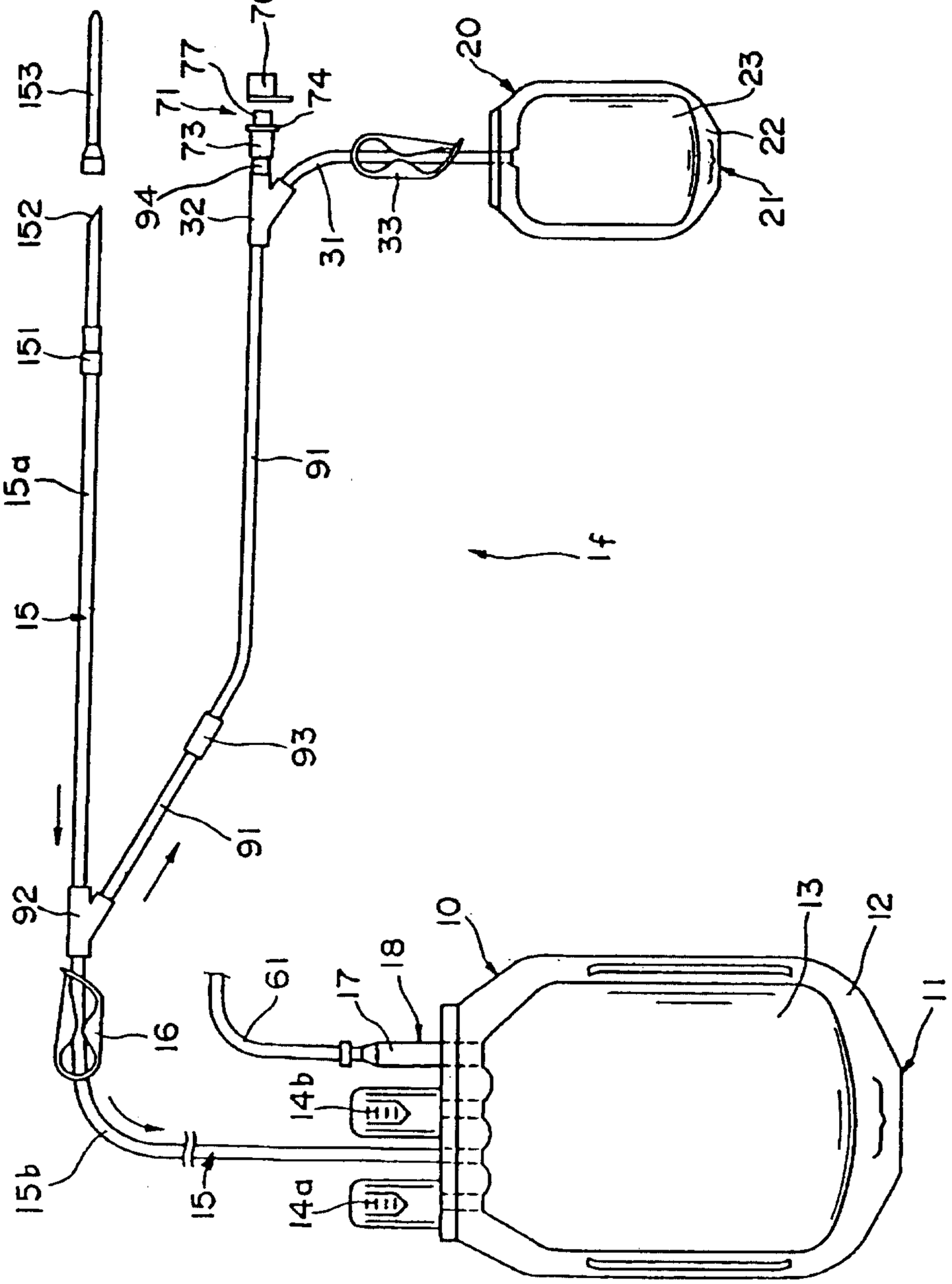
153
152
151
15a
15
92
93
91
94
32
73
71
77
74
7
20
23
22
21
31
33
91
1f
16
61
17
18
10
13
12
11
14b
14a
15b
15

FIG. 10

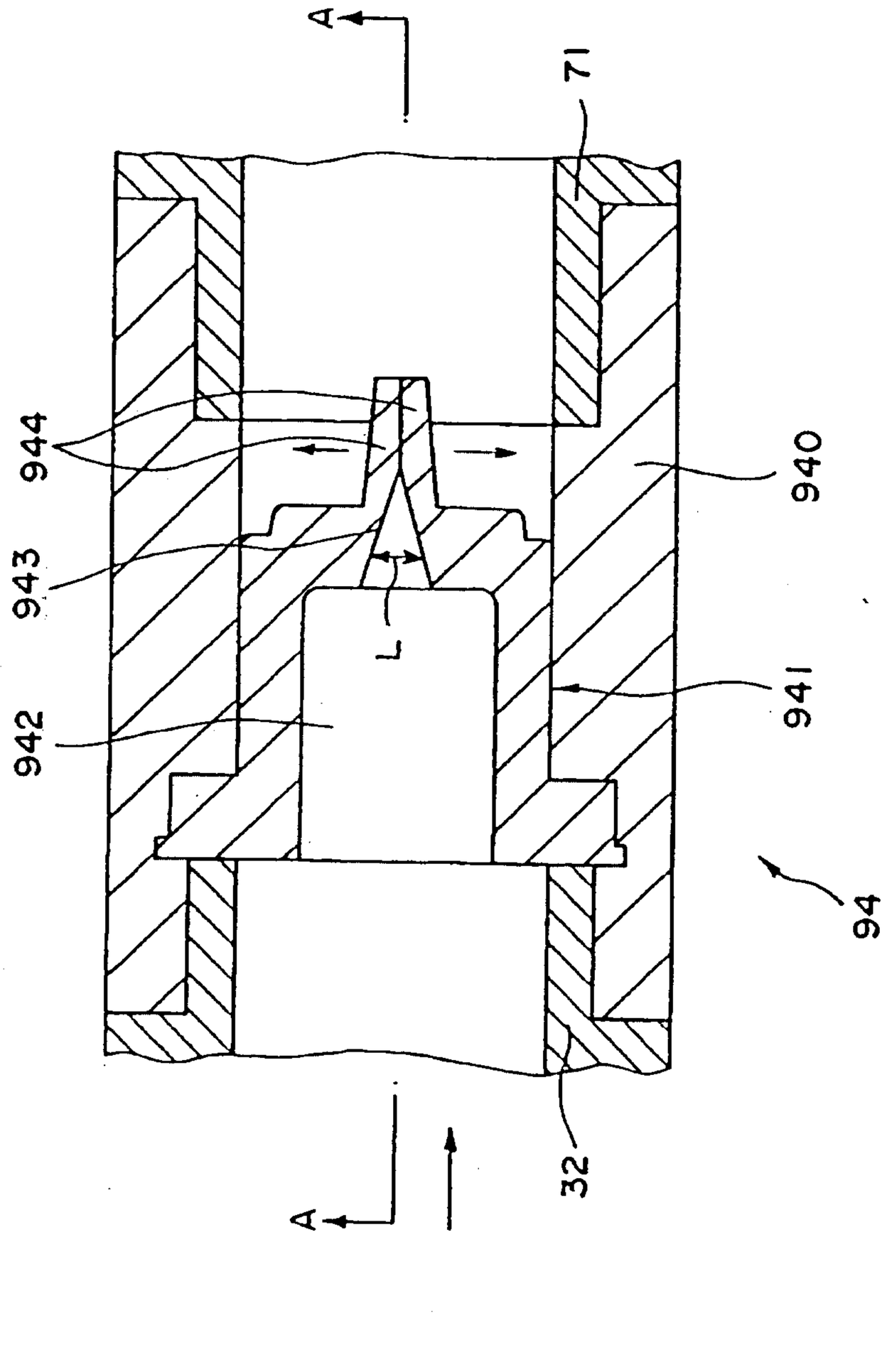

FIG. 11

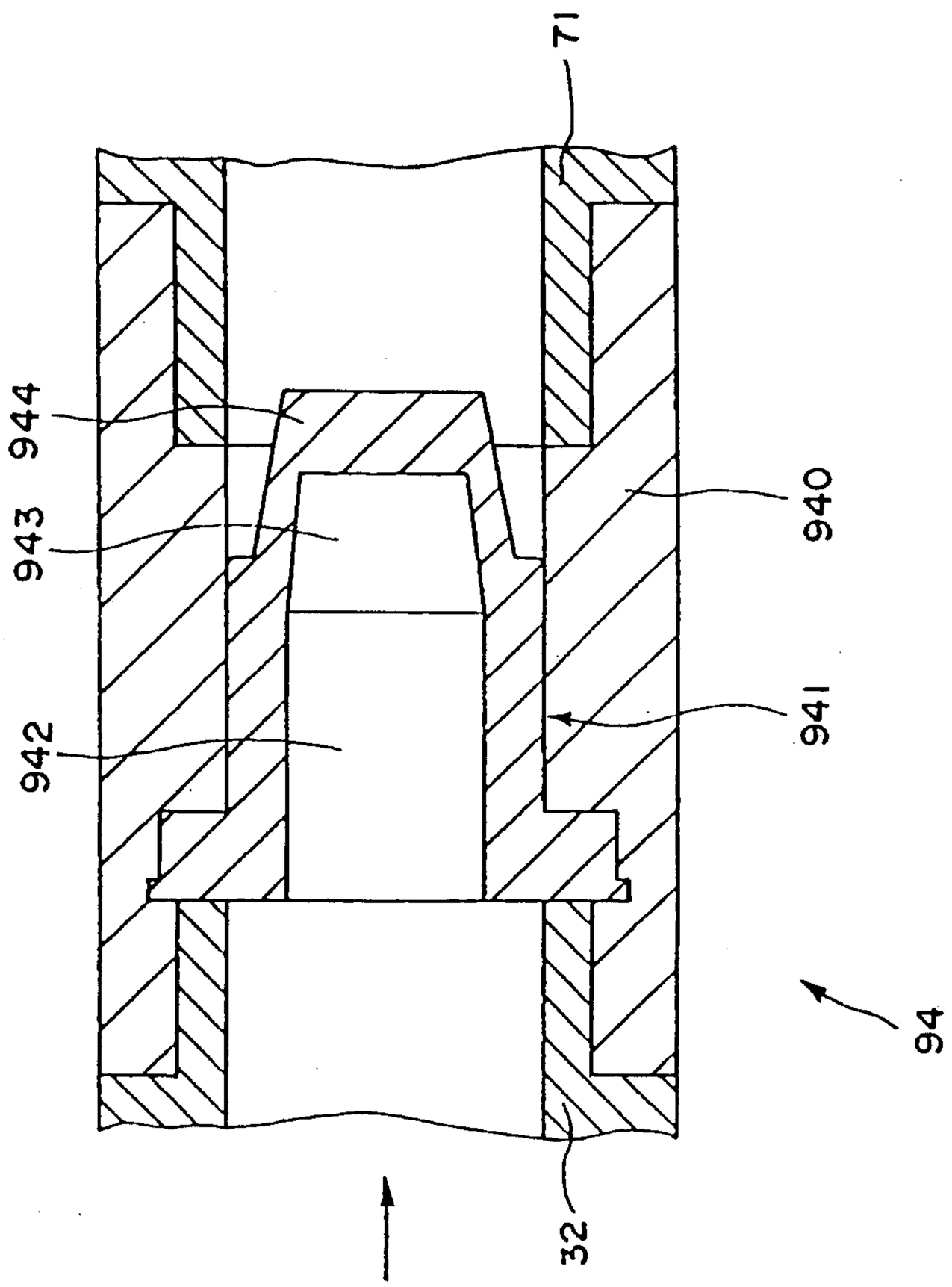

FIG. 12

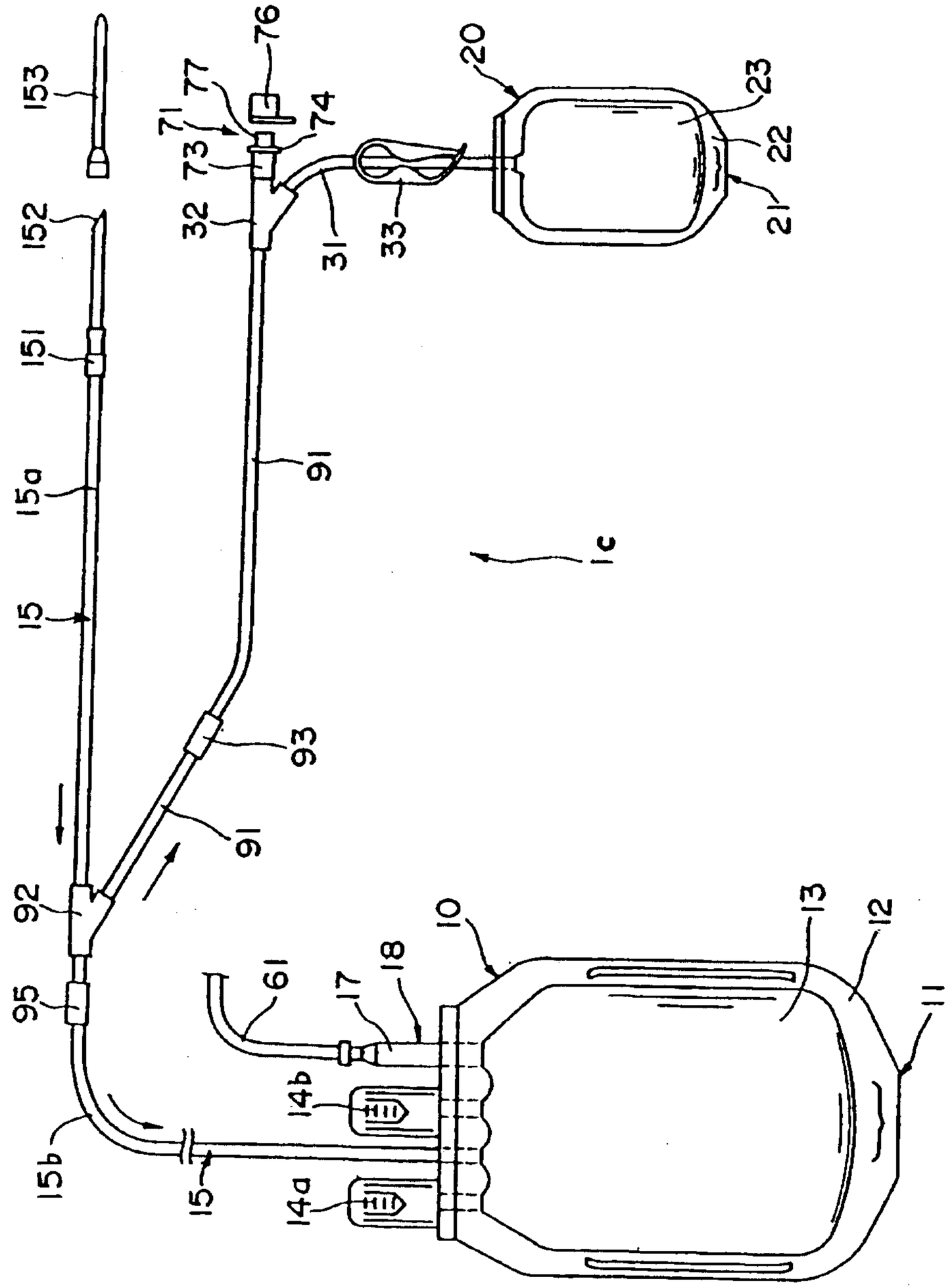
153
152
151
15a
15
92
95
15b
15
14a
14b
61
17
18
10
13
12
11
91
93
91
32
71
77
76
74
73
31
33
20
23
22
21
1c

FIG. 13

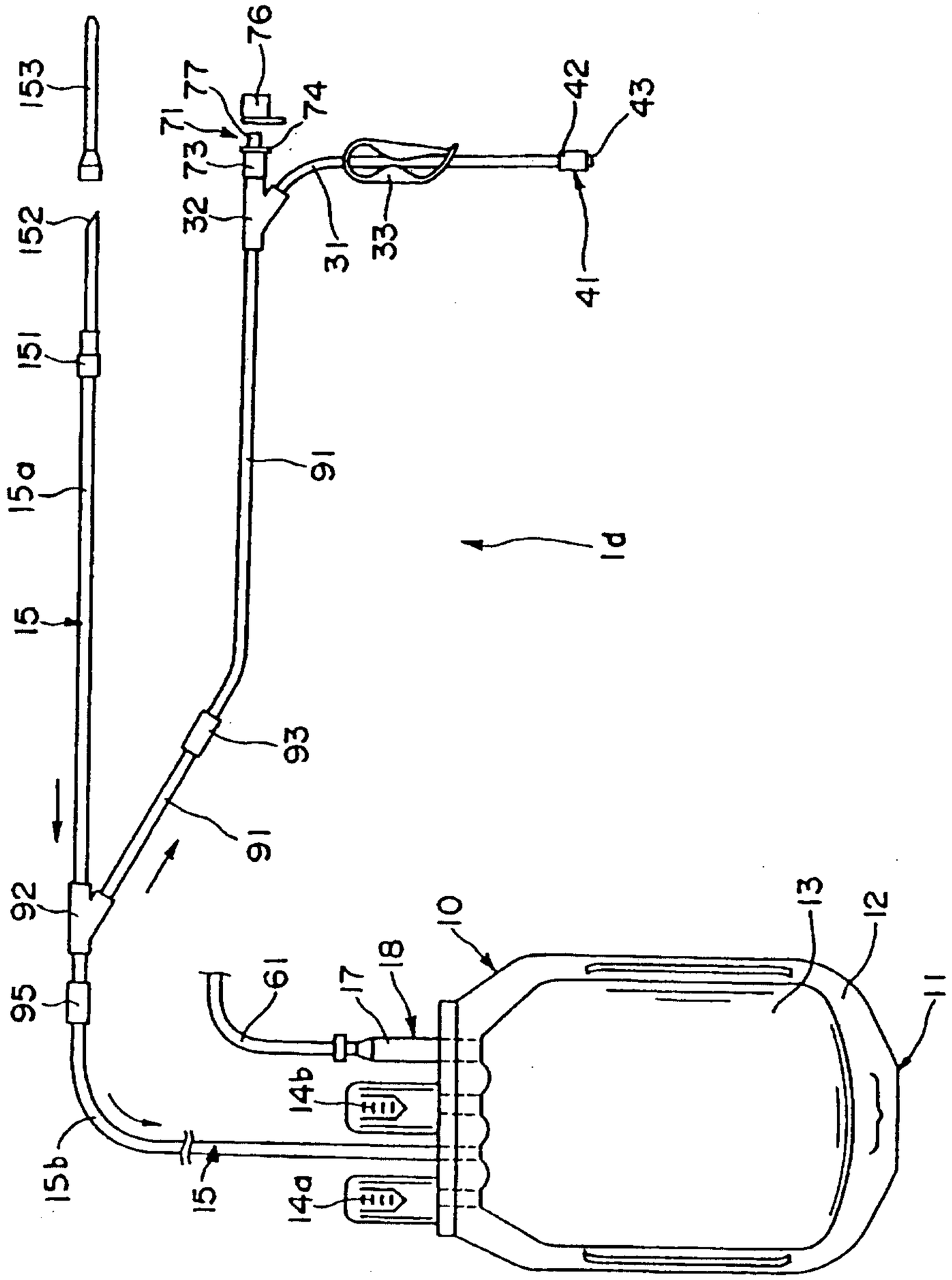
153
152
151
15a
15
92
95
15b
15
91
93
91
76
77
71
74
73
32
31
33
42
43
41
91
1d
10
13
12
11
18
17
61
14b
14a

FIG. 14

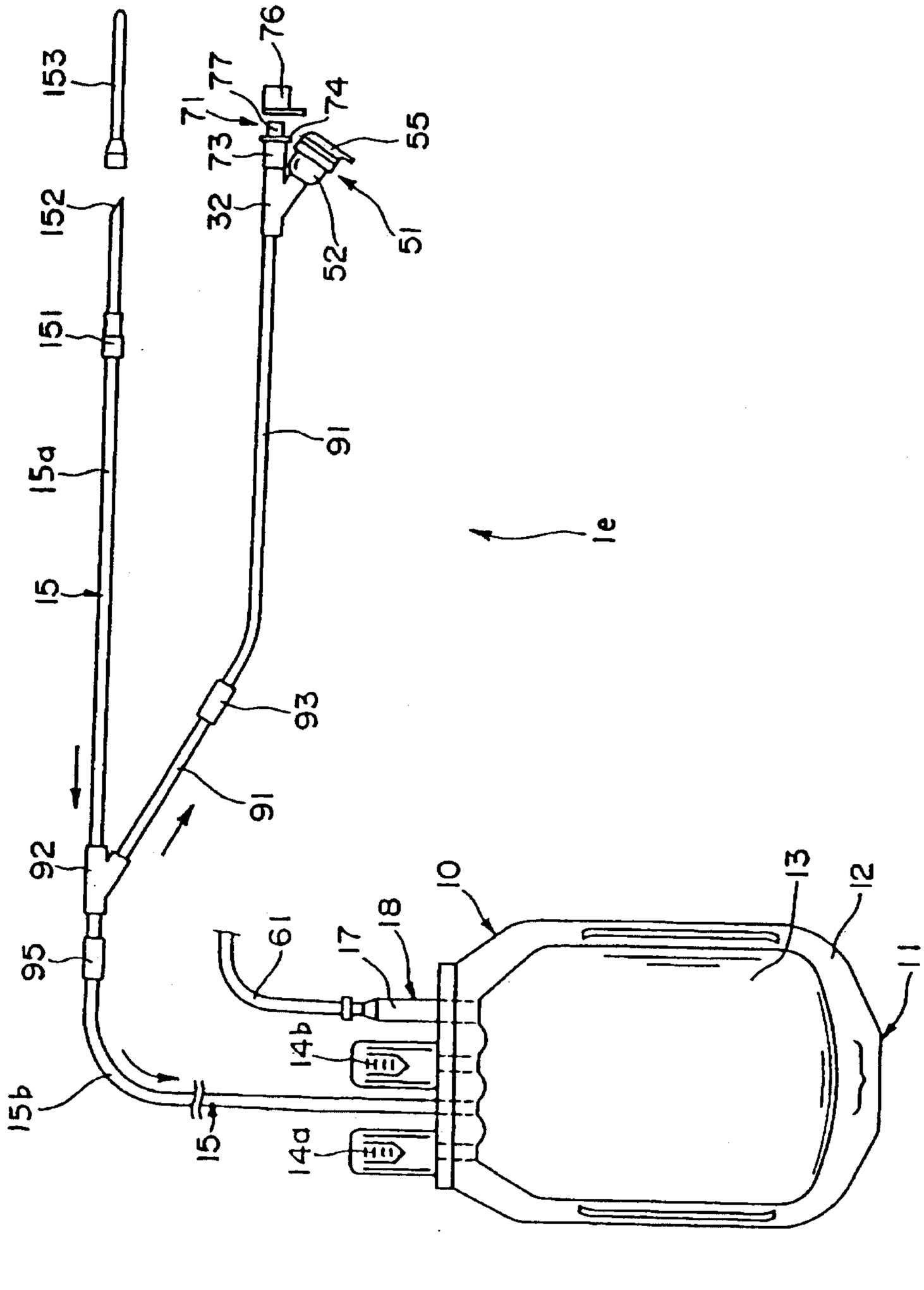
153
152
151
15a
15
92
95
15b
15
93
91
91
76
77
71
74
73
55
32
52
51
1e
61
17
18
10
13
12
11
14b
14a

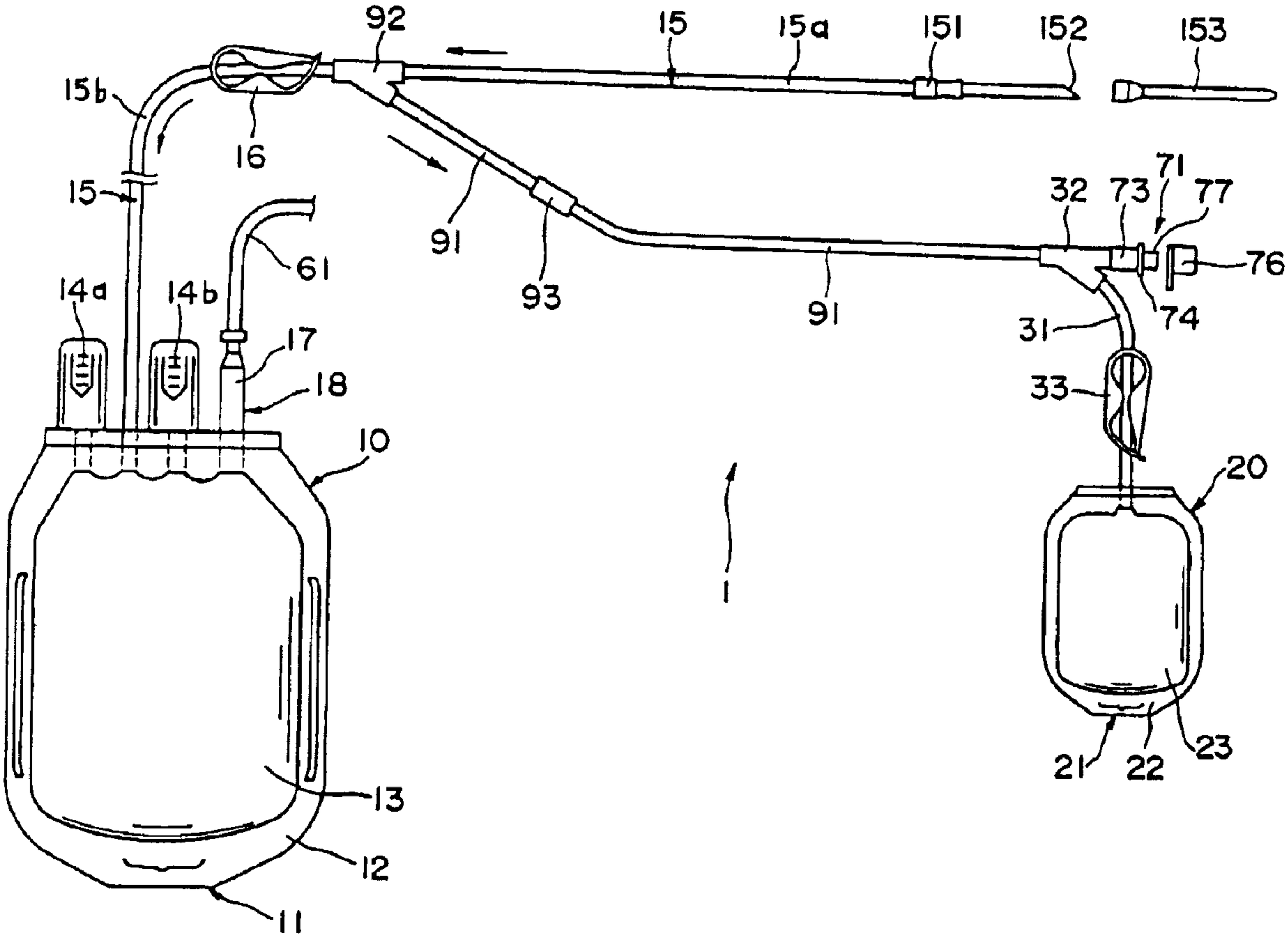
92
15
15a
151
152
153
15b
16
15
91
93
91
71
32
73
77
76
74
31
33
20
61
14a
14b
17
18
10
13
12
11
1
21
22
23