United States Patent [19]

Hepp et al.

[11] **3,871,662**

[45] **Mar. 18, 1975**

[54] **CHILD-RESISTANT CLOSURE**

[75] Inventors: **K. Kevin Hepp**, Perrysburg; **James H. Price**, Maumee, both of Ohio

[73] Assignee: **Owens-Illinois, Inc.**, Toledo, Ohio

[22] Filed: **Jan. 11, 1974**

[21] Appl. No.: **432,527**

[52] **U.S. Cl.** **215/223**, 215/206, 215/224

[51] **Int. Cl.** **B65d 55/02**, B65d 85/56, A61j 1/00

[58] **Field of Search** 215/206, 223, 224

[56] **References Cited**

UNITED STATES PATENTS

3,393,816	7/1968	Grimm	215/223
3,432,058	3/1969	Burgess	215/224 X
3,627,160	12/1971	Horvath	215/224

Primary Examiner—George T. Hall

Attorney, Agent, or Firm—A. J. Steger; E. J. Holler

[57] **ABSTRACT**

An improved child-resistant closure and container combination is provided wherein the container mouth includes a retaining rib with a narrow, deep slot and a wide, shallow slot formed therein. The closure has on its internal surface a narrow, thick lug and a wide, thin lug. The internal lugs on the closure must be aligned with the mating slots on the retaining rib in order to remove the closure from the container. The closure also is provided with a removal tab which becomes aligned with a notched external flange on the container neck for access to the removal tab when the internal closure lugs are aligned with the retaining rib slots on the container.

8 Claims, 7 Drawing Figures

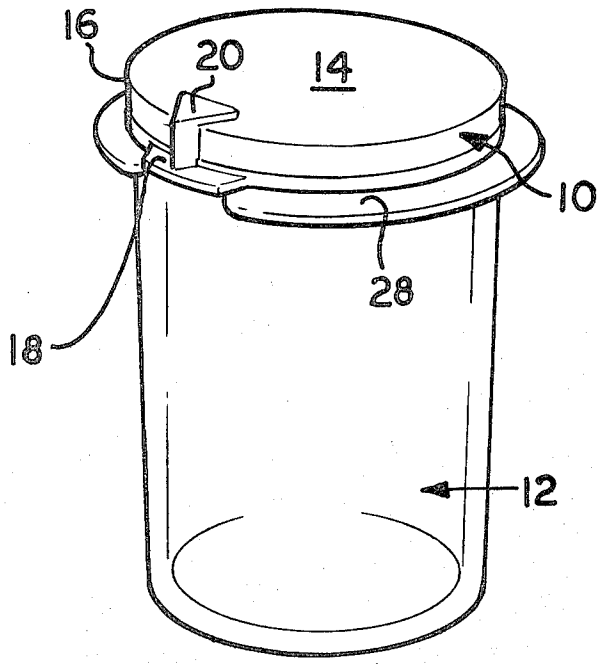

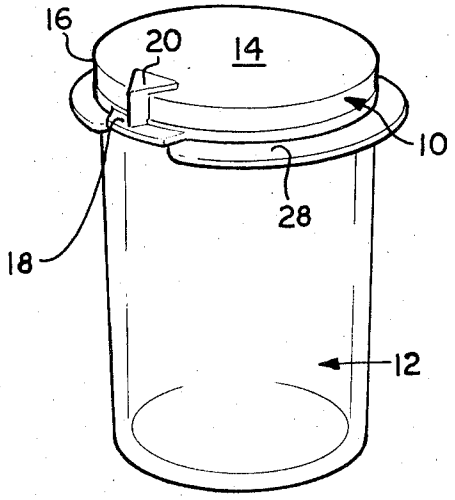

FIG. 1

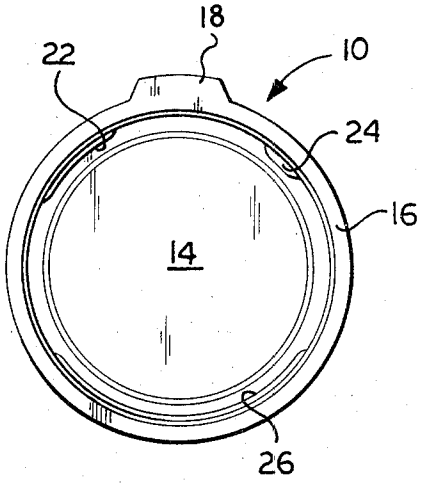

FIG. 3

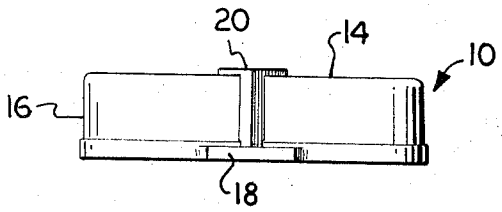

FIG. 2

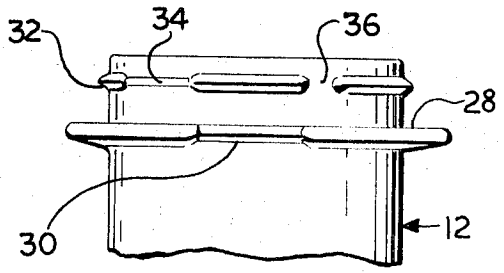

FIG. 5

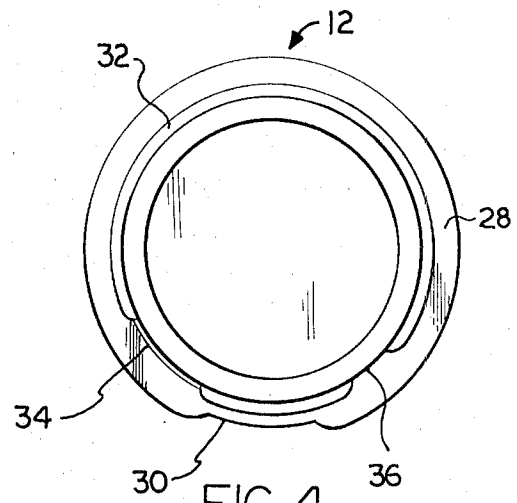

FIG. 4

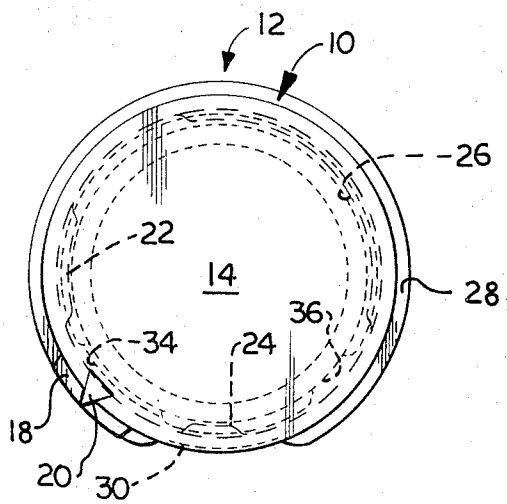

FIG. 6

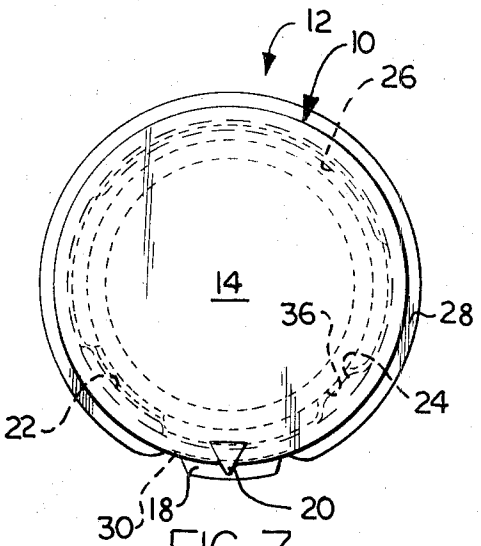

FIG. 7

CHILD-RESISTANT CLOSURE

BACKGROUND OF THE INVENTION

This invention relates to a child-resistant closure and container combination whereby dangerous or hazardous medications or the like carried within a container are safely contained therein by locking features of the container closure such that the contents of the closure will not become readily available to children. In other words, the closure and container are so constructed that the closure may be easily positioned on the container into a locking position, but in order to remove the closure from the container, some considerable thought and specific intent is necessary. The closure is constructed with a removal tab, access to which may be gained only when the removal tab overlies a notch in an external flange on the container neck. The closure includes on its internal surface a narrow, thick lug and a wide, thin lug which mate with a narrow, deep slot and a wide, shallow slot in a retaining rib on the upper neck portion of the container when the aforementioned removal tab is aligned with the notch in the external flange to allow removal of the closure from the container. Thus, the closure must be rotated to a predetermined circumferential location in order to remove it from locking engagement with the container.

The prior art has suggested many types of safety caps and container configurations for keeping poisons, dangerous chemicals, and other medications away from children or unsuspecting adults. Examples of such prior art safety caps include those disclosed in U.S. Pat. Nos. 3,170,585 (George H. O'Donnell), 3,627,160 (William Horvath), 3,703,974 (Leo M. Boxer et al.), and 3,759,979 (Walter G. Berghahn).

The prior art devices have heretofore suffered in the respect that they have been difficult and expensive to manufacture or have necessitated unduly complicated maneuvers in order to place the cap into engagement with the container after the desired portion of the contents of the container have been removed.

In the safety cap field, it is usually desirable to require a relatively high degree of manual dexterity in removing the cap, but once it is removed, it is desired to replace it as quickly as possible without necessitating complicated maneuvers. In addition, many of the prior art safety closures have incorporated only one safety feature so that, through careful manipulation or the application of excess force, this safety feature can be overcome and becomes inoperative.

SUMMARY OF THE INVENTION

In its preferred form, this invention discloses a safety cap or closure and container combination which includes a cap member having top and depending wall portions, the interior surface of the cap member being adapted to receive the mouth portion of a container having a coacting or mating configuration. The interior surface of the closure has a narrow, thick lug and a wide, thin lug formed thereon in the same semicircular span and being separated from each other. The container mouth includes a retaining rib which is interrupted by a narrow, deep slot and a wide, shallow slot which are sized and spaced to mate with the narrow, thick lug and wide, thin lug, respectively, on the closure. The closure is adapted to slide over the mouth portion of the container so that the lugs on the interior of the closure will snap into engagement with the retaining rib on the container mouth at any circumferential position. However, the closure may be removed only when the closure has been rotated to a position where the respectively sized lugs and slots are in a mating position so that the lugs will slide through the slots.

The container mouth also includes an external flange which extends radially outwardly beyond the skirt portion of the closure when it is applied to the container. This flange includes a deep access notch which is formed by a recessed portion of smaller radial extent than the main body of the flange. A removal tab is formed at the lower edge of the closure skirt and extends radially outwardly therefrom to a position approximating the radial extent of the external flange on the container neck. Thus, access to this removal tab may be had only when the removal tab is positioned overlying the notch in the flange portion of the container neck.

The closure and container combination of this invention is formed so that the respective lugs on the closure and slots in the retaining rib of the container are in alignment at a circumferential position simultaneously with the alignment of the removal tab with the notch in the flange portion of the container. Thus, the removal tab is accessible only when the tab is positioned in overlying relationship with the notch in the container neck flange and, simultaneously, the lugs are aligned with the slots in the retaining rib. When the closure is rotated to any other circumferential location, both lugs on the closure are locked beneath the retaining rib on the container and access to the removal tab is made impossible by the flange on the container neck. Thus, the combination of the lug-retaining rib slot and the tab-container neck flange safety features provides a double safe child-resistant closure and container combination.

In addition, the use of the two dissimilar lug and slot configurations makes forced removal of the closure from the container at a position where only one lug is adjacent to a notch impossible. In other words, the wide, thin lug will not pass through the narrow, deep slot, and the narrow, thick lug will not pass through the wide, shallow notch. Thus, a third safety feature is incorporated into the child-resistant closure of this invention.

Other objects, features, and advantages of the subject invention will become apparent to one skilled in the art upon reference to the following detailed description and the drawings illustrating a preferred embodiment thereof.

IN THE DRAWINGS

FIG. 1 is a perspective view of a child-resistant closure and container combination incorporating the unique features of this invention;

FIG. 2 is a front elevation view of the closure of FIG. 1;

FIG. 3 is a bottom plan view of the closure of FIG. 2;

FIG. 4 is a top plan view of the neck portion of the container of FIG. 1;

FIG. 5 is a partial front elevation view of the container of FIG. 4;

FIG. 6 is a top sectional view of the closure and container combination of this invention in a locked position; and

FIG. 7 is a top sectional view of the closure and container combination of this invention in a position where the members are aligned for removal of the closure.

A DISCLOSURE OF A PREFERRED EMBODIMENT

In its preferred embodiment, this invention is illustrated in FIG. 1 to include a combination child-resistant closure and container which are designated by the numerals **10** and **12**, respectively. The closure **10**, as can be seen in FIGS. 1 and **2**, includes a top panel **14** and a depending wall or skirt portion **16**. The closure **10** also includes on its external surface a removal tab **18** which extends outwardly from the lower edge of the skirt **16**. An arrow member **20** is formed to protrude upwardly from the top panel **14** and outwardly from the skirt **16** adjacent to the removal tab **18** to serve as a "touch and feel" locator or indicator for the removal tab **18**. The arrow member **20** is particularly helpful when trying to find the removal tab in the dark or for people with inferior eyesight, such as the blind or aged.

As can be seen in FIG. **3**, the closure **10** includes on its interior surface a pair of locking lugs **22** and **24** and a camming lug **26**. Each of the lugs **22**, **24** and **26** are formed on the interior surface of the skirt **16** adjacent the lower edge thereof. The locking lug **22** has a wide, thin configuration and, in contrast, the locking lug **24** has a narrow, thick configuration. The camming lug **26** has a constant thickness and spans a larger circumferential portion of the closure than do the locking lugs **22** and **24**. The functions of each of these lugs will become apparent when the remainder of this description has been read.

The neck portion of the container **12** can be seen in the drawings to include a relatively large external flange **28** which extends outwardly from the neck of the container a distance equal to or greater than the radial extent of the removal tab **18** on the closure **10**. A recessed portion or notch **30** is formed in the flange **28** to provide access to the removal tab **18** when the closure **14** is positioned in engagement with the container **12**. As can be seen in FIGS. **4** and **5**, the container **12** includes a retaining rib **32** adjacent the upper edge of the container neck. This retaining rib **32** is adapted to cooperate with the lugs **22**, **24** and **26** on the closure **10** to retain the closure **10** in locked engagement with the container **12**. The retaining rib **32** has formed therein a wide, shallow slot **34** and a narrow, deep slot **36** which are identical in size and shape with the locking lugs **22** and **24** respectively.

The operation of the child-resistant closure and container combination of this invention can best be understood by reference to FIGS. **6** and **7**. Initially, the closure **10** may be placed into engagement with the container **12** at any circumferential location as the lugs **22**, **24** and **26** on the closure **10** are adapted to slide over the retaining rib **32** on the container **12** to lock thereunder. Once the closure **10** has been placed into locking engagement with the container **12**, three separate safety features are involved in preventing the removal of the closure from the container.

Since the removal tab **18** is of the same radial extent as the flange **28** on the container neck, access to this tab is prevented in all circumferential locations except when the tab **18** is rotated into overlying relationship with respect to the notch **30** in the flange **28** (as shown in FIG. **7**). Secondly, the locking lugs **22** and **24** combine with the camming lug **26** to retain the closure in locked engagement in all circumferential positions except where the wide, thin lug and narrow, thick lug are positioned adjacent the wide, shallow notch and the narrow, deep notch respectively. As stated previously, the circumferential position, where the locking lugs **22** and **24** are adjacent to slots **34** and **36**, is identical to that where the removal tab overlies the notch in the container flange. The use of dissimilar sized lugs and notches as disclosed by this invention prevents the possibility of the alignment of one notch with one lug and the subsequent application of considerable force to overcome the remaining resistance created by only one lug being positioned under the retaining rib. In this embodiment, the possibility of partial alignment removal cannot occur, as the wide, thin lug cannot slide through the narrow, deep slot, nor can the narrow, thick notch be forced through the wide, shallow slot. Thus, at all times except when the precise combination of mating lugs and slots are positioned adjacent each other, both locking lugs are retaining the closure in locking engagement with the container. The camming lug **26** also provides additional locking engagement under the retaining bead **32**; however, this camming lug **26** acts as a pivot or camming surface when the lugs **22** and **24** are positioned adjacent their mating slots **34** and **36** and the removal tab **18** of the closure is lifted so as to pivot the closure out of engagement with the container.

Thus, it can be seen from the preceding description that the child-resistant closure and container combination of this invention overcomes the disadvantages associated with the prior art in that the closure may be removed at only one circumferential position and in that position it may be removed very easily. In all other circumferential locations, there is both no access to the removal tab and a complete blocking action provided to prevent removal of the closure. However, in the desired removal position, both access to the removal tab and ease of unlocking is provided by the simultaneous alignment of the removal tab with the flange notch and the alignment of the locking lugs with the respective slots in the retaining bead. It should be understood that a variety of different lug and slot configurations may be utilized and are encompassed within the scope of this invention.

We claim:

1. A child-resistant closure and container combination comprising a flexible closure member having a top portion and a depending peripherally continuous wall portion, the wall portion having an interior surface, the interior surface having a pair of inwardly projecting locking lugs of dissimilar configuration and an inwardly projecting camming lug thereon, one of said locking lugs having a first configuration and the other of said locking lugs having a second configuration, said pair of locking lugs being of limited annular extent and contained within a separate semicircular span of the interior surface of said closure wall portion from said camming lug, and a container having a mouth portion, the mouth having an outwardly projecting retaining rib adjacent an upper end thereof, said retaining rib being substantially continuous with a pair of slots of dissimilar configuration formed therein, one of said slots having a first configuration of sufficient size to allow said one locking lug to pass through said rib and the other of said slots having a second configuration of sufficient size to allow said other locking lug to pass through said

rib, said locking lugs and said camming lug engaging the lower surface of said retaining rib upon application of the closure to the container to hold the closure on the container, and said locking lug preventing removal of said closure from said container except when said one locking lug is positioned adjacent said one slot and said other lug is positioned adjacent said other slot.

2. A child-resistant closure and container combination as set forth in claim 1, wherein said container mouth further includes an outwardly projecting external flange which is substantially continuous and has a notch formed therein, said closure includes a removal tab projecting outwardly from said wall portion, the radial extent of said tab being greater than the radial extent of said notch but not greater than the radial extent of the remainder of said flange, said closure being rotatable relative to the container mouth to effect registration of the removal tab with the notch for removal of the closure from the container.

3. A child-resistant closure and container combination as set forth in claim 2, wherein the registration of the removal tab with the notch coincides simultaneously with the alignment of said one locking lug with said one slot and said other locking lug with the other slot.

4. A child-resistant closure and container combination as set forth in claim 3, wherein said camming lug is of sufficient size so as to be larger than said slots in the retaining rib.

5. A child-resistant closure and container combination comprising a flexible closure member having a top portion and a depending peripherally continuous wall portion, the wall portion having an interior surface, the interior surface having a pair of inwardly projecting locking lugs and an inwardly projecting camming lug thereon, one of said locking lugs having a narrow, thick configuration and the other of said lugs having a wide, thin configuration, said pair of locking lugs and said camming lug being of limited annular extent and contained within a separate semicircular span of the interior surface of said closure wall portion, the container having a mouth portion, the mouth having an outwardly projecting retaining rib adjacent an upper end thereof, said retaining rib being substantially continuous with a pair of slots formed therein, one of said slots having a narrow, deep configuration of sufficient size to allow said one locking lug to pass through said rib and the other of said slots having a wide, shallow configuration of sufficient size to allow said other locking lug to pass through said rib, said locking lugs and said camming lug engaging the lower surface of said retaining rib upon application of the closure to the container to hold the closure on the container, and said locking lug preventing removal of said closure from said container except when said one locking lug is positioned adjacent said one slot and said other lug is positioned adjacent said other slot.

6. A child-resistant closure and container combination as set forth in claim 1, wherein said container mouth further includes an outwardly projecting external flange which is substantially continuous with a notch formed therein and said closure includes a removal tab projecting outwardly from said wall portion, the radial extent of said tab being treater than the radial extent of said notch but not greater than the radial extent of the remainder of said flange, said closure being rotatable relative to the container mouth to effect registration of the removal tab with the notch for removal of the closure from the container.

7. A child-resistant closure and container combination as set forth in claim 2, wherein the registration of the removal tab with the notch coincides simultaneously with the alignment of said one locking lug with said one slot and said other locking lug with the other slot.

8. A child-resistant closure and container combination as set forth in claim 7, wherein said camming lug is of sufficient size so as to be larger than said slots in the retaining rib.

* * * * *