(No Model.)

4 Sheets—Sheet 1.

P. MAUSER.

SMALL LOCK FOR BOLT GUNS.

No. 590,271.

Patented Sept. 21, 1897.

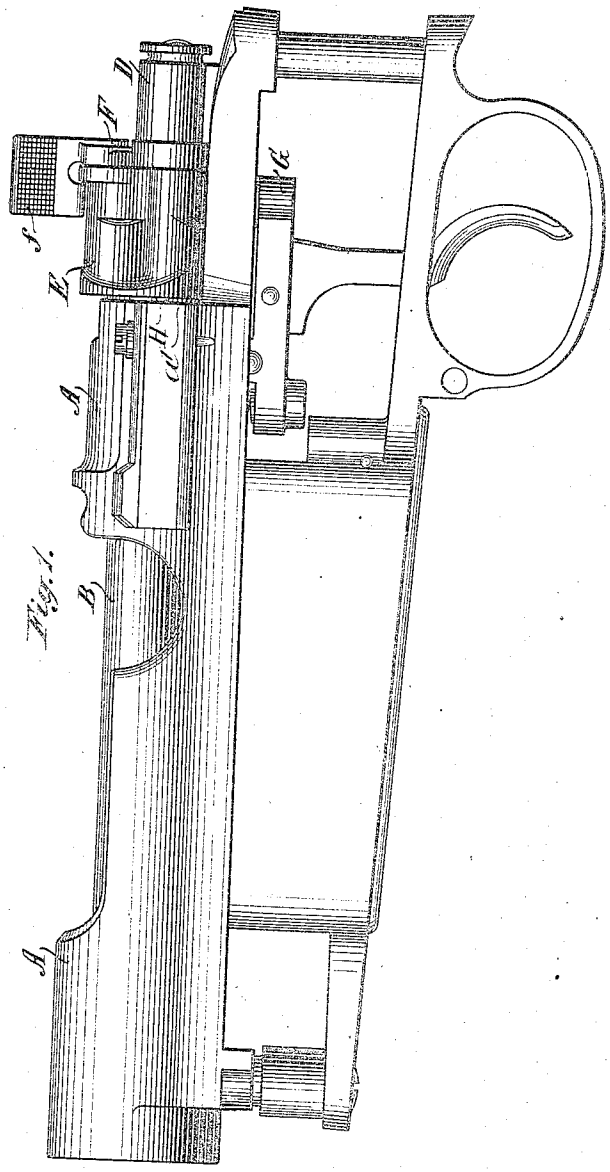

Fig. 1.

WITNESSES:

Fred White

Thomas F. Wallace

INVENTOR:

Paul Mauser,

By his Attorneys

Wilson L. Fraser & Co

(No Model.)

4 Sheets—Sheet 2.

P. MAUSER.

SMALL LOCK FOR BOLT GUNS.

No. 590,271. Patented Sept. 21, 1897.

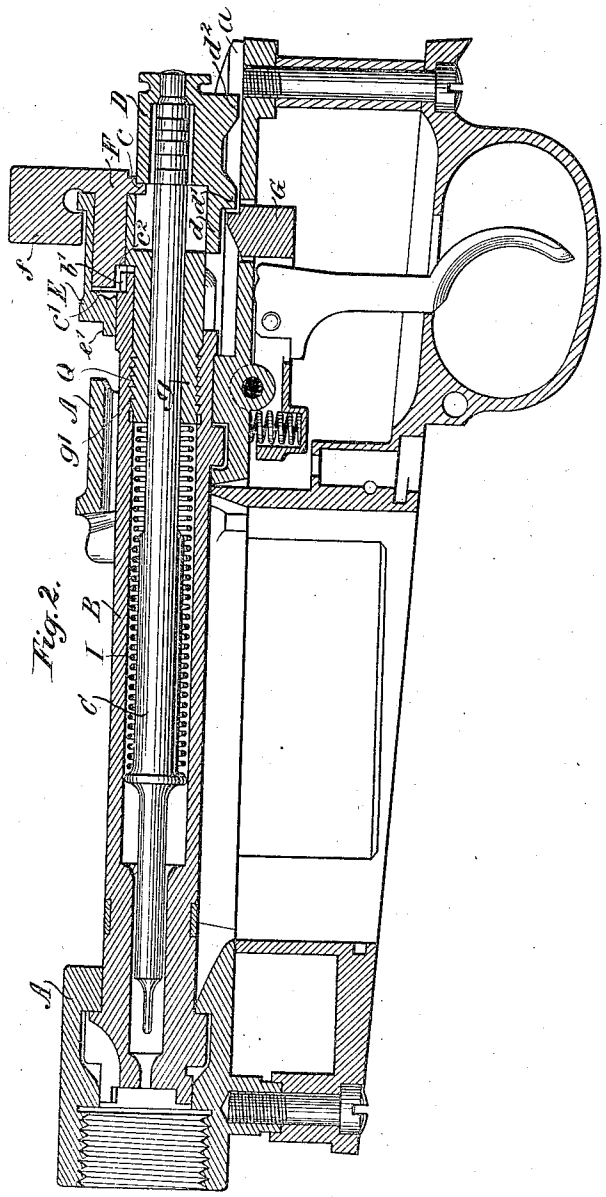

WITNESSES:
Fred. White
Thomas F. Wallace

INVENTOR:
Paul Mauser,
By his Attorneys.
Munn & Fraser & Co.

(No Model.)

4 Sheets—Sheet 3.

P. MAUSER.

SMALL LOCK FOR BOLT GUNS.

No. 590,271. Patented Sept. 21, 1897.

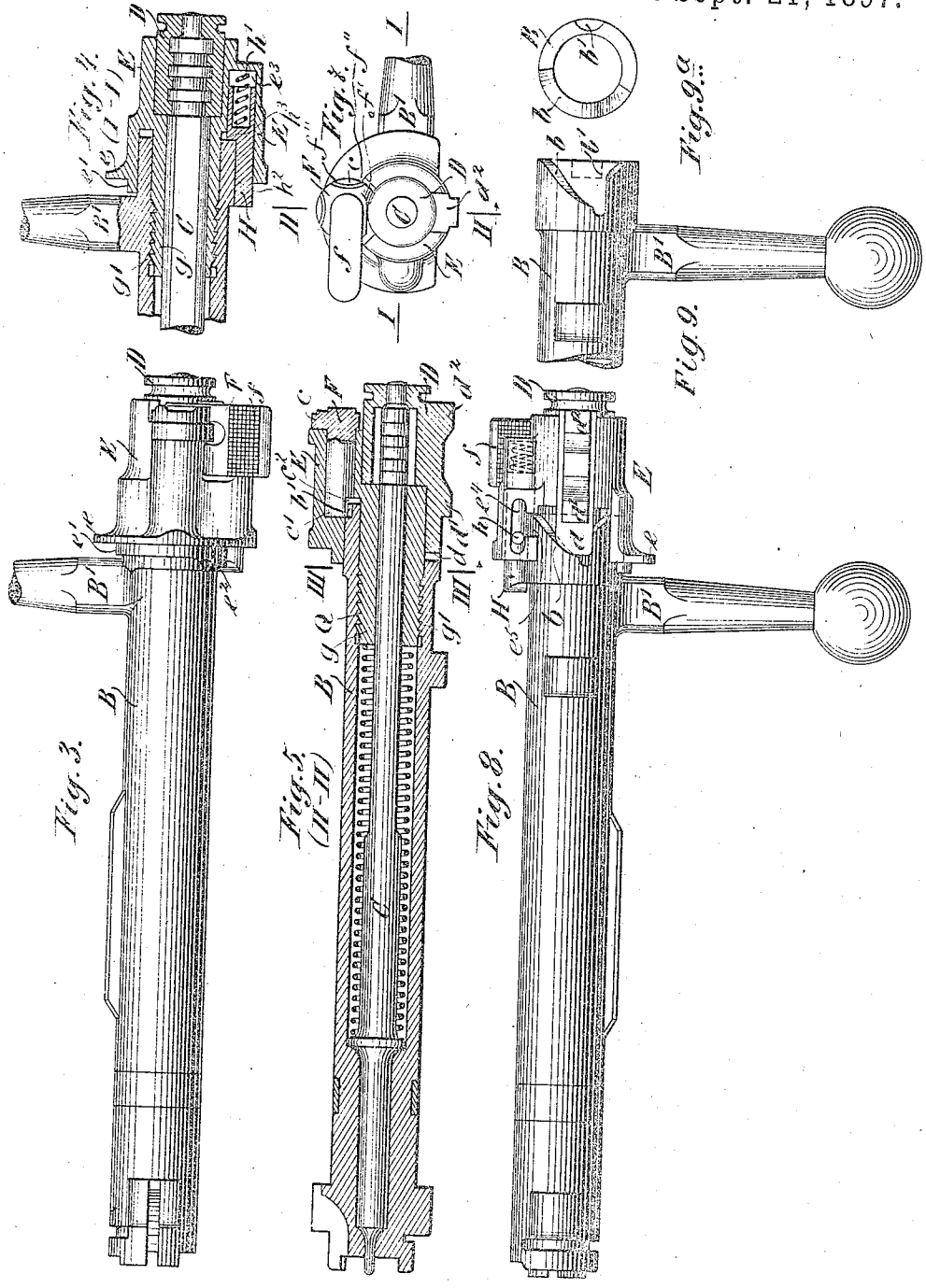

WITNESSES:
Fred Whitz
Thomas F. Wallace

INVENTOR:
Paul Mauser,
By his Attorneys
Albert G. Davis & Co

(No Model.)

4 Sheets—Sheet 4.

P. MAUSER.

SMALL LOCK FOR BOLT GUNS.

No. 590,271. Patented Sept. 21, 1897.

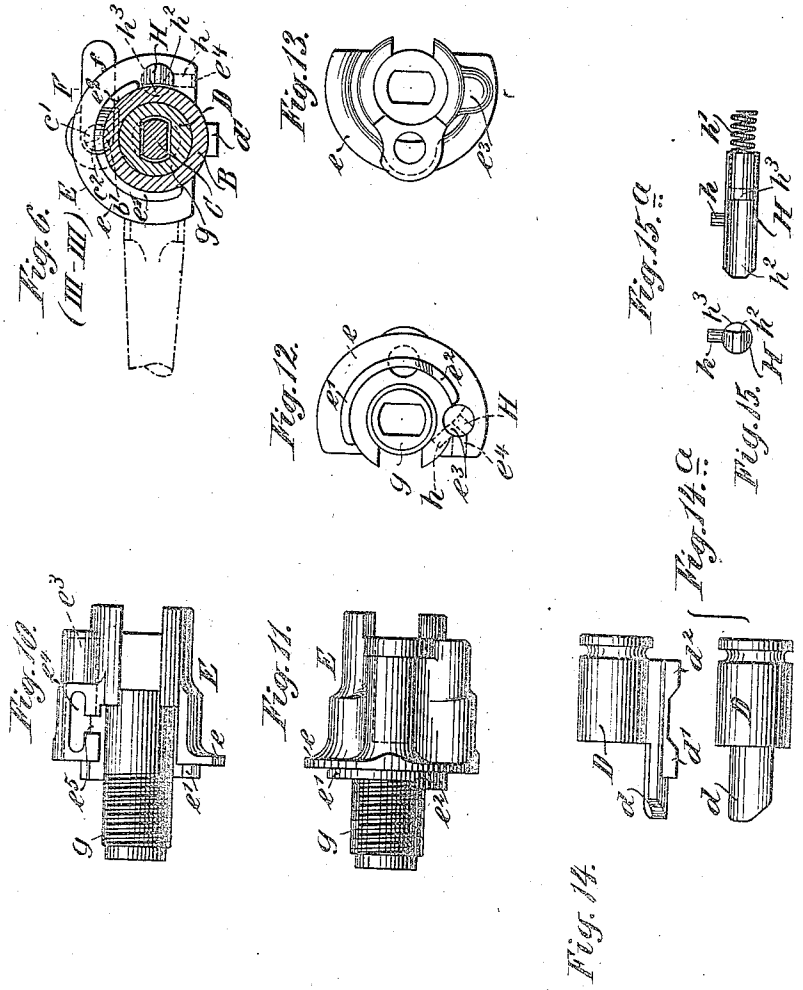

WITNESSES:
Fred White
Thomas F. Wallace

INVENTOR:
Paul Mauser,
By his Attorneys:
Albert G. Davis & Co

UNITED STATES PATENT OFFICE.

PAUL MAUSER, OF OBERNDORF, GERMANY.

SMALL LOCK FOR BOLT-GUNS.

SPECIFICATION forming part of Letters Patent No. 590,271, dated September 21, 1897.

Application filed December 2, 1895. Serial No. 570,770. (No model.) Patented in Belgium November 9, 1895, No. 118,487; in France November 11, 1895, No. 251,598; in England November 13, 1895, No. 21,547; in Norway November 21, 1895, No. 4,649; in Switzerland December 9, 1895, No. 11,332; in Italy December 31, 1895, No. 40,133/425; in Austria February 5, 1896, No. 46/437, and in Spain March 7, 1896, No. 18,284.

To all whom it may concern:

Be it known that I, PAUL MAUSER, a subject of the King of Würtemberg, residing in Oberndorf upon the Neckar, in the Kingdom of Würtemberg, Germany, have invented certain new and useful Improvements in Small Locks for Breech-Loading Bolt-Guns, of which the following is a specification.

This invention was patented in Spain, No. 18,284, dated March 7, 1896; in Belgium, No. 118,487, dated November 9, 1895; in Austria, No. 437/46, dated February 5, 1896; in Italy, No. 40,133/425, dated December 31, 1895; in Switzerland, No. 11,332, dated December 9, 1895; in Norway, No. 4,649, dated November 21, 1895; in England, No. 21,547, dated November 13, 1895, and in France, No. 251,598, dated November 11, 1895.

This invention relates to breech-loading bolt-guns, and aims to provide improvements in the small locks for coupling the firing-pin to the bolt of such guns, improvements in safety-locks for such guns, and an improved catch acting to prevent accidental loosening or uncoupling of the small lock and bolt.

To this end in carrying out the invention I provide certain features of improvement which will be hereinafter fully set forth.

The preferred form of my invention as applied to one construction of bolt-gun is shown in the accompanying drawings, in which—

Figure 1 is a fragmentary elevation of the left-hand side of the breech parts of a breech-loading bolt-gun; and Fig. 2 is a vertical longitudinal section thereof, the bolt being shown in the receiver and in the locked position, the firing-pin cocked, and the safety device in its middle or second position, locking the firing-pin against forward movement. Fig. 3 is a fragmentary top plan view of the bolt and the parts coupled thereto, the firing-pin being in the forward or fired position and the safety-lock being in its first or neutral position, being the position in which the firing-pin is free to move past the safety-lock. Fig. 4 is a fragmentary horizontal axial section thereof cut on the line 1 1 in Fig. 7, showing the bolt in the locked position, the firing-pin in the fired position, and the catching device in its normal or first position or that in which it bears against the end of the bolt, permitting rotation thereof to the unlocked position and ready upon the turning of the bolt to the unlocked position to snap forward and lock the bolt and small lock together against relative rotation. Fig. 5 is a longitudinal vertical axial section of the parts shown in Figs. 3 to 7 when in the position illustrated in these figures, the view being cut on the line II II of Fig. 7 and looking in the direction of the arrow. Fig. 6 is a fragmentary cross-section cut on the line III III in Fig. 5 and looking rearwardly in the direction of the arrow. Fig. 7 is a fragmentary rear elevation of the parts shown in Figs. 3 to 6 in the positions described with reference to these figures and showing the cam on the safety-lock. Fig. 8 is an under side plan of the parts shown in Figs. 3 to 7 in the positions described with reference to these figures. Fig. 9 is a fragmentary bottom plan view of the rear end of the bolt and its handle, and Fig. 9^a is a fragmentary rear end elevation thereof. Fig. 10 is an under side plan of the small lock alone. Fig. 11 is a top plan thereof. Fig. 12 is a front end elevation thereof, and Fig. 13 is a rear end elevation thereof. Fig. 14 is a side elevation of the pin-nut alone; and Fig. 14^a is a top plan thereof, showing its cocking-nose *d*; and Fig. 15 is a front end elevation; and Fig. 15^a, a side elevation, looking from the right of the catch-pin H and its spring *h'*.

Referring to the drawings, let A indicate the receiver, which, as usual, has a substantially tubular longitudinal socket; B, the bolt, which oscillates and reciprocates in the socket; B', the bolt handle or knob by which the bolt is oscillated and reciprocated and which when turned down to the right places the bolt in the locked position and when turned ninety degrees to the vertical releases the bolt, bringing it to the unlocked position for withdrawal rearwardly; C, the spring-actuated firing-pin within the bolt; D, the pin nut or head at the rear of the pin, coupled thereto to move therewith; *d*, the cocking-nose thereof; *d'*, the sear nose or notch thereof; *a*, the groove in the receiver, through which the lat-

ter nose moves; G, the sear, engaging the latter nose when the pin is cocked; E, the small lock, through which the firing-pin slides and which is screwed or otherwise suitably coupled to the rear end of the bolt B, so that the latter turns on it and suffices, as usual, to lock the bolt and firing-pin together and still permit their several movements; F, the safety-lock, rotatively carried by the small lock and acting when oscillated to the left to permit the free movement of the firing-pin and the oscillation of the bolt when turned to the middle or vertical position to lock the firing-pin against forward movement and permit oscillation of the bolt and when turned to the third or right-hand position to lock the bolt against oscillation and hold the firing-pin in the cocked position; Q, a swiveled separable connection between the bolt and small lock, consisting of a screw-threaded shank g on the latter, screwing into a female screw-thread g' in the bolt, and I the spring for the firing-pin.

As thus far described the parts are in their general features of known construction and operation, and in lieu of those shown any other suitable or equivalent constructions of the same general character may be employed. As usual, the rear end of the bolt is provided with an inclined cocking-face b, which in the locked position of the bolt permits the full forward movement of the firing-pin and which as the bolt is turned to the unlocked position acts against the beveled end of the nose d of the firing-pin nut to push back the pin to the cocked position. The rear end of the bolt also has the usual safety-lock notch b', which is disposed at the top when the bolt is in the locked position and is then opposite the nose of the safety-lock F, which nose passes into this notch to lock the bolt against oscillation. When the bolt is withdrawn from the receiver and the safety-lock is turned to the mid-position and holds the pin cocked, the small lock can be unscrewed from the bolt, carrying with it the firing-pin and its pin-nut and spring.

My invention aims to provide means for catching or arresting the small lock when the bolt is drawn rearwardly out of the receiver, so that during such time the small lock shall not accidentally rotate relatively to the bolt, and to this end I provide an improved catch serving this function. The invention also aims to provide an improved smoke and gas check, and to this end I provide a guard on the small lock to check rearwardly-escaping gases. My invention also aims to provide an improved guide for the firing-pin and its nut and a dust-guard for the firing-pin groove a, and to this end I provide a guiding and closing projection on the nut, serving as an additional guide therefor and closing the groove a.

The catch for the small lock has for its object to simplify the parts with which it is connected without increasing their number, to increase the functions of the safety-locking arrangements for facilitating the securing and releasing of such parts, to prevent accidental loosening or oscillation of the small lock when in its middle or retracted position while the gun is unlocked, to facilitate dismounting of the parts, to insure correct remounting thereof, and to give a noticeable indication, preferably observable both by sound and feeling, of the arrival of the parts at the completely-remounted position.

The last-mentioned object is of great importance, as sometimes it has happened in use that the small lock was not completely screwed home into the bolt, and when screwed even a single thread less than it should be toward its home position the point of the firing-pin could not project far enough through the bolt-head, the result being the producing of a misfire, the cause of which in most instances has been difficult to discover or explain.

My improved catch is lettered H in the drawings, and in its preferred form consists of a substantially cylindrical pin having a lateral stud h, guided in a cylindrical bore e^3 in the small lock, pressed forwardly by a spring h', controlled by the projection of its stud into a slot e^4 in the small lock and removable by passing this stud through an outlet e^5 from this slot. One side of the pin H is cut away at h^2 to correspond with and permit the passage of the end of the bolt during the normal position of the catch, and back of this portion the pin has a cylindrical or projecting portion h^3 to engage with the bolt, preferably by snapping into the notch b' thereof when the catch is to lock the bolt and small lock non-rotatively together, as will be hereinafter more fully described.

My improved gas-guard is lettered e, and consists of a lateral flange extending, preferably, over the top and along each side of the small lock at or near the front end thereof and shielding or deflecting any rearwardly-escaping gases against a further rearward movement.

My improved dust-guard and pin-guide is lettered d^2, and consists of a rearward extension of the cocking projection d on the firing-pin nut, which extension slides in and substantially closes the groove a in the receiver.

Some of the advantages resulting from the adoption of my improvements are: First, the cocking-surface b, Figs. 8 and 9, at the rear end of the breech-bolt B may be considerably enlarged on account of the removal of the necessity for any second cocking-notch, while at the same time the angle of the cocking-surface is reduced from about sixty degrees to forty degrees, which in its turn facilitates the opening operations of the lock; second, the special form of the front end e of the small lock E enables it to serve as a shield to guard against the rearward escape of the gases of explosion, and, third, through the rearward extension d^2 of the cocking projection d on the nut of the firing-pin said nut

is not only more securely guided but the introduction of sand or the like into the guiding-groove *a* is prevented.

The special functions required of the improved catch H are effected at three different positions of the same and of the thumb-piece or handle of the usual safety device F with respect to the gun.

First, firing or initial position: The safety-handle *f* of the safety-lock F is turned over to the left, the bolt is in its locked position, and the firing-pin uncocked. (See Figs. 3, 5, 6, and 7.) In this position the improved catch H for the small lock, consequent on its position relatively to the breech-bolt, will when the bolt is forward be pressed back and out of engagement therewith by its nose striking the receiver; but at the moment of unlocking the gun and as the bolt starts to move rearwardly the catch H will be pushed forwardly by its spring *h'* into the notch *b'*, thus locking the bolt and small lock together, whereupon it will automatically secure the small lock against accidentally unscrewing to the left or falling by coupling it with the rear end of the breech-bolt in such a manner as to prevent any alteration in the relative positions of these two parts until after the catch H has been pushed back again by reason of its end striking the rear wall *a'*, Fig. 1, of the receiver, barrel, or other fixed part during the forward movement of the breech-bolt until the latter has again assumed its forward or closed position in the receiver, when the locking of the small lock relatively to the breech-bolt is automatically severed through the release of the catch H, whereupon the bolt can be freely oscillated or locked independently of the small lock, which latter is now held by the receiver from turning.

Second, safety or middle position: The safety thumb-piece *f* is turned up through an angle of ninety degrees, so as to stand vertically, and thereby locks the pin cocked. (See Figs. 1 and 2.) This is the position the safety thumb-piece is required to occupy when it is desired to take the lock of the gun to pieces, in which case it is necessary first to cock the gun, when after turning the safety thumb-piece into its required position the latter is caused to engage the nut D in such a manner as to prevent the forward movement of the latter with the firing-pin under the extension of its spring. When the engagement between the catch H and the breech-bolt, described in respect of the first position, is discontinued, as by pushing back the catch, the small lock may be at once unscrewed from the breech-bolt and taken to pieces. The lock is remounted in the reverse order; but it will not now be necessary to exercise care to properly complete making the coupling between the small lock and the breech-bolt, as with my invention this coupling is automatically terminated at the end of the screwing movement by a projection e^2 at the front of the small lock, which then comes into contact with the foot or base of the operating-handle B' of the bolt, thus preventing any further inward movement of the small lock. It may be mentioned that the completion of the screwing movement, and consequently the proper position of these parts, may be ascertained not only by the touch but also at the same time by the ear, as the catch H, which forms the lock between the small lock and the breech-bolt, snaps with a characteristic sound into the recess *b'* on the breech-bolt, and thus distinctly indicates that the lock and the bolt have been correctly fitted together. In this position the small lock cannot be screwed either forward or backward, and in order to do so it will be necessary to first break the coupling made by the catch H between the small lock and the breech-bolt, so that in the present arrangement it will be at once clear, by the resistance felt to attempts at such screwing, whether or not the parts have been properly connected together.

Third or locked position: The thumb-piece of the safety device is turned through an angle of one hundred and eighty degrees from its initial position into the horizontal position at the right-hand side of the gun. This position and its effects on the lock mechanism are well known. The firing-pin is then prevented by the flange *c* of the safety-lock from moving forward, and the breech-bolt is prevented by the head *c'* of the safety-lock entering the notch *b'* from turning in the receiver to the unlocked position without requiring the catch H to operate in the manner stated with respect to positions I and II. The catch H operates only when the breech-bolt is unlocked, when it is required to prevent the small lock from falling over and damaging the stock of the gun in the relocking of the bolt.

The safety-lock F in Figs. 1 and 2 is in its second or middle position. Although preventing the firing-pin from moving forward, it has no influence on the movement of the breech-bolt in relation to the small lock, because its recessed part c^2 is beyond the end of the bolt. If in that position the previously-turned breech-bolt were taken out of the barrel, it was possible with the arrangement hitherto in use to merely unscrew the small lock from the breech-bolt and to remove it, together with the firing-pin and nut D, from the gun. Moreover, it was possible in that position for the small lock to tumble over through a blow or shock, and thus give rise to the inconveniences hereinbefore mentioned. This is obviated by the improved catch H in connection with the small lock, consisting, as shown in Figs. 15 and 15a, of the catch-pin H with stud *h* and the spring *h'*, guided in a cylindrical bore e^8 on the small lock in such manner as to enable it to slide under the pressure of the spring *h'*, with its stud *h* in the slot e^4, without the possibility of falling out of the small lock when the latter is being removed.

According to another feature of improvement the safety-lock F is provided with a cam f' or with other suitable means for automatically crowding the firing-pin back to permit the flange c of the safety-lock to pass in front of it as the lock F is turned from the firing position toward the safety position. This cam f' is shown in Fig. 7 as extending along the lower edge of the flange c to the rear side of the flange an extent sufficient to enter in front of the nut D and crowd back the pin C until the sear-shoulder d' is removed from the sear G when the lock F is turned to safety, so that the parts will then stand in the positions shown in Fig. 2 of the drawings, wherein the safety device F is represented as being in its second position and in operative engagement with the cocking-head D, and the sear-shoulder d' is slightly separated from the engaging part of the sear G, leaving a slight space between these two parts, whereby upon pulling the trigger the sear will simply play up and down in space without there being any contact or engagement between the sear and its complemental shoulder on the cocking-head. This has the effect of always insuring that the sear will rise up in front of the sear-shoulder of the firing-pin in case the trigger were accidentally or intentionally pulled while the gun is cocked and the safety device is in operative position, which might not be the case if this provision were not made. In the absence of this provision friction might in time wear away the engaging parts of the safety and cocking heads, thus permitting the firing-pin to move slightly in advance of a position to be engaged by the sear should the same have been withdrawn while the parts are in the safety position, thus rendering possible the accidental firing of the gun in removing the safety from its engagement with the firing-pin. The flange c also has a shallow notch opposite and receiving the nut D of the pin, flanked by shoulders f'' f'', which engage the nut and resist displacement of the lock.

The catch-pin H is taken out of the small lock in the following manner: by pressing it with the finger so far back into the small lock itself that the stud h comes opposite the side outlet or opening e^5 in the slot e^4. The pin H is then turned round toward the interior of the small lock when the stud h passes through the outlet e^5 into the position shown at Fig. 12, when it can be pulled out of the cylindrical bore e^3 in the small lock.

The catch-pin H, under the pressure of the spring h', has a constant tendency to advance into its most outward position from the small lock, and to enable it to do so its rearward cylindrical part h^3 must necessarily enter the recess b' at the rear of the breech-bolt, and thus couple the latter with the small lock in such a manner as to prevent any twisting movement of the two parts in relation to each other. The above advancing movement of the catch-pin is impossible, first, when the small lock is not in a position to bring it in line with the recess b' in the rear end of the breech-bolt, (see Figs. 3, 4, and 8;) secondly, when the breech-bolt in the locking position has entered so far into the gun-receiver that the catch-pin H comes into contact with the rear part of the latter, and is thereby pushed back far enough to allow its cylindrical part h^3 to leave the recess b', and thus to break the locking between the small lock and the breech-bolt. This latter position of the catch is always the case when the breech-bolt is in its locked position, but it cannot happen accidentally when the bolt is unlocked, as previous to pulling the bolt back both the bolt and the small lock are brought into such a relative position as to bring the recess b' into the axial line of the catch-pin H, so that the latter can enter it as soon as the parts start back, and thereby prevent the accidental tumbling over of the small lock thereafter.

If it is intended to remove the small lock from the unlocked breech-bolt, care must be taken that the safety thumb-piece f is in position II. It is then only necessary to press the catch-pin H far enough back to force its cylindrical part h^3 out of the recess b', when the small lock can be unscrewed from the bolt without difficulty. When, on the contrary, it is desired to remount the small lock on the breech-bolt, it can be screwed thereon only until the shoulder e^2 on the annular part e' at the front of the small lock abuts against the foot of the handle B', at which moment the catch-pin H is caused by the spring h' to snap into the recess b' on the breech-bolt with a loud sound, as previously stated. By this means the unscrewing of the small lock is prevented unless the catch-pin is pressed back, as hereinbefore explained. The above-mentioned sound constitutes an unfailing indication that the parts have been correctly mounted in relation to each other.

It will be seen that the operations before described for securing the bolt against accidental unlocking, as well as for preventing the small lock from accidentally tumbling over, are both effected by aid of the one recess b', which prevents the accidental unlocking of the breech-bolt when entered by the head d' of the safety device F, while when the breech-bolt is unlocked and away from the barrel the catch-pin H enters the same recess b', whereby the small lock is coupled to and held by the breech-bolt and is thus prevented from accidentally tumbling over.

It will be seen that my invention provides improvements which can be readily and advantageously availed of, and it will be understood that the invention is not limited to the particular details shown, but that it can be employed according to such modifications or adaptations as circumstances or the judgment of those skilled in the art may dictate without departing from the spirit of the invention.

What I claim is, in breech-loading bolt-guns and other arms, the following-defined

novel features and combinations, substantially as hereinbefore set forth, namely:

1. An oscillatory and longitudinally-movable bolt having a fixed bolt-handle, a small lock rotatively coupled to the rear of the bolt and movable longitudinally therewith, a firing-pin carried by said bolt and coupled thereto by said small lock, and a receiver holding said small lock against turning when the bolt-handle is turned down, and freeing the small lock when said handle is turned up and moved back, in combination with automatic means locking said small lock against rotation when the bolt-handle is turned up and during its longitudinal movement, and automatically unlocking it at the end of such movement, and then permitting said handle to turn down, whereby during longitudinal movement the small lock cannot turn out of position.

2. A receiver, a bolt having a fixed handle, and having oscillatory and longitudinal movements therein, a small lock secured to and moving longitudinally with said bolt at rear of its handle, engaging said receiver when moved forward, then prevented thereby from rotation, and free to rotate when moved back, and a firing-pin carried by said bolt, said bolt and small lock movable from a closed position in said receiver to an open position at rear thereof, and the one having a notch adjacent to the other, said handle turning down to lock the bolt in the closed position and turning up to free it and move it back, in combination with a catch carried by one of said parts and engaging the notch in the other of said parts when the handle is turned up and moved back, and then locking said small lock non-rotatively to the bolt, said catch having a portion engaging and moved by the receiver as said parts approach the forward position, and thereby disengaged from said notch, and then permitting said bolt-handle to oscillate.

3. A bolt having a notch b', and a small lock E swiveled thereto and having a socket e^3, a notch e^4 and a recess e^5, and a catch H consisting of a pin seated in said socket, engaging said notch b' in said bolt and having a stud h moving in said notch e^4, all combined and arranged substantially as and for the purpose set forth.

4. A receiver, and a bolt working therein and having an open rear end, in combination with a small lock E swiveled to and closing the rear end of said bolt, bearing at its under side on said receiver, and having a lateral projecting flange e near its front end, and surrounding the exposed end of said bolt, and constituting a gas-shield for deflecting rearwardly-escaping gases.

5. An oscillatory bolt having a locking-notch, and a small lock swiveled to said bolt, and a safety-lock carried by said small lock, and entering said notch at one position of the bolt, and thereby locking the bolt against oscillation, in combination with a safety-catch carried by said small lock, entering said notch when said bolt is moved to another position, and then locking the small lock against oscillation relatively to the bolt.

In witness whereof I have hereunto signed my name in the presence of two subscribing witnesses.

PAUL MAUSER.

Witnesses:
W. HAUPT,
ALOYS GOBANZ.