H. B. COOLEY.

APPARATUS FOR REGULATING THE DELIVERY OF DRINKING CUPS.

APPLICATION FILED MAY 6, 1914.

1,216,417. Patented Feb. 20, 1917.

2 SHEETS—SHEET 1.

Fig. 1.

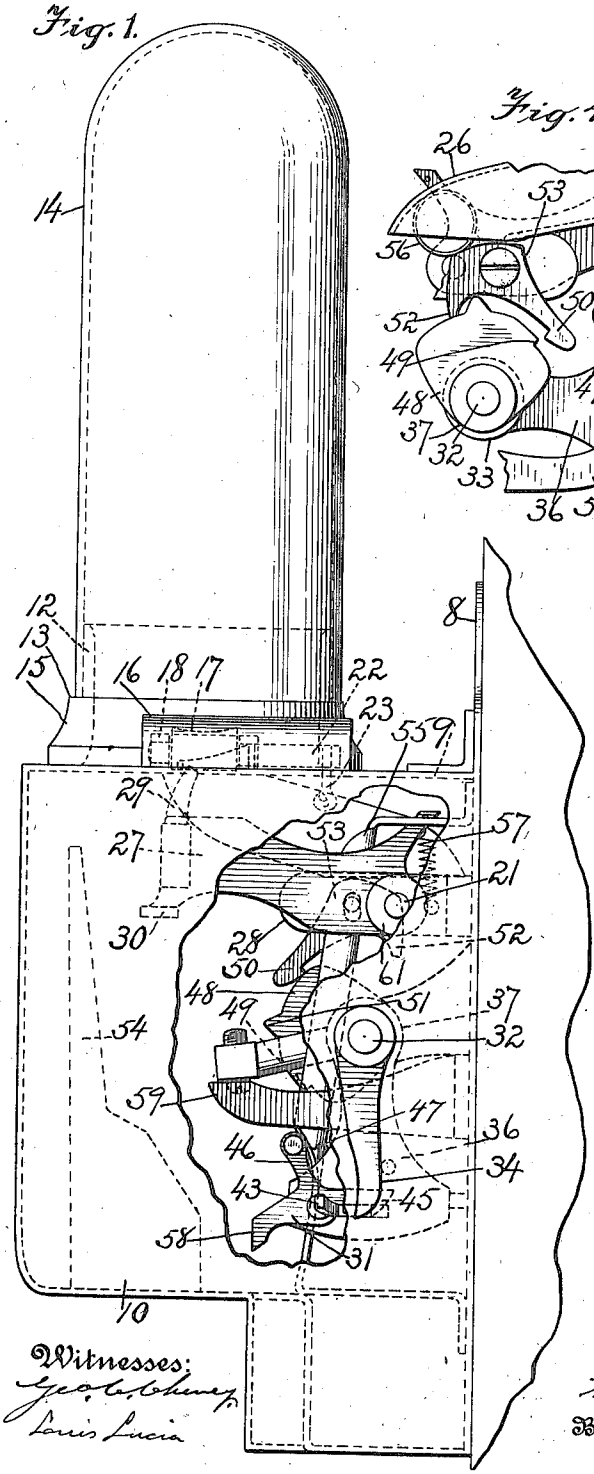

Fig. 4.

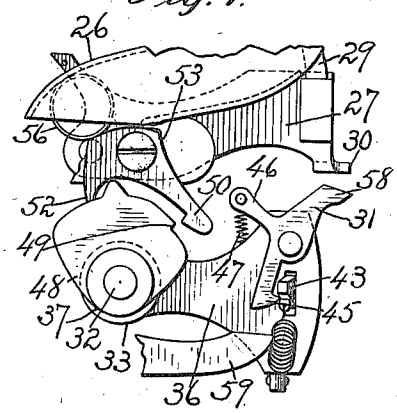

Fig. 5.

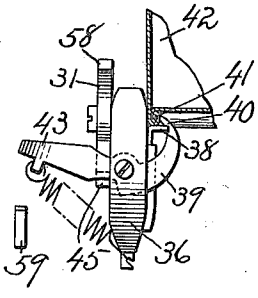

Fig. 6.

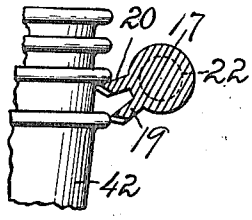

Fig. 7.

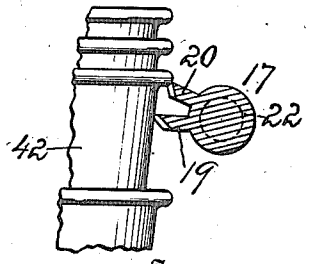

Witnesses:
Geo. C. Cheney
Louis Lucia

Inventor
Henry B. Cooley.
By his Attorney
Arthur B. Jenkins.

H. B. COOLEY.

APPARATUS FOR REGULATING THE DELIVERY OF DRINKING CUPS.

APPLICATION FILED MAY 6, 1914.

1,216,417.

Patented Feb. 20, 1917.

2 SHEETS—SHEET 2.

Fig. 3.

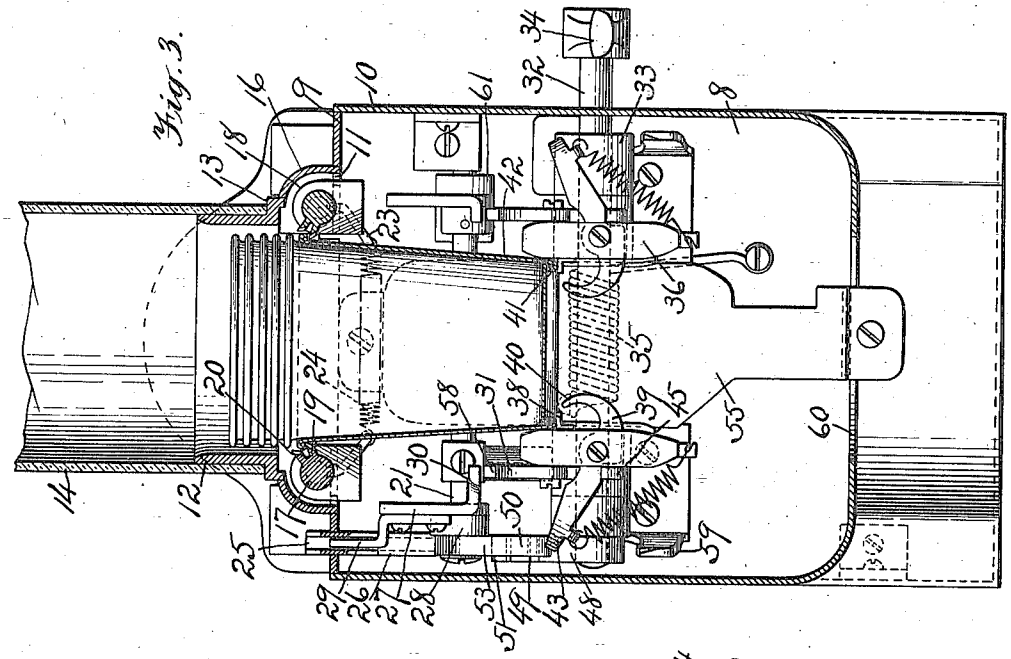

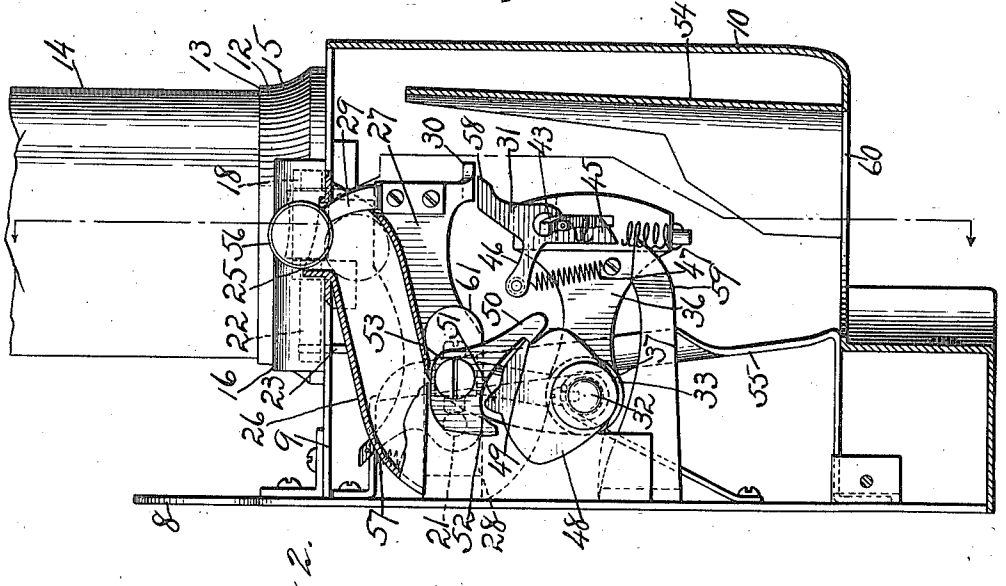

Fig. 2.

Witnesses:
Geo. B. Cheney
Louis Lucia.

Inventor
Henry B. Cooley,
By his Attorney
Arthur G. Jenkins.

UNITED STATES PATENT OFFICE.

HENRY B. COOLEY, OF KENSINGTON, CONNECTICUT, ASSIGNOR TO THE AMERICAN PAPER GOODS COMPANY, OF MONTCLAIR, NEW JERSEY, A CORPORATION OF NEW JERSEY.

APPARATUS FOR REGULATING THE DELIVERY OF DRINKING-CUPS.

1,216,417. Specification of Letters Patent. Patented Feb. 20, 1917.

Application filed May 6, 1914. Serial No. 836,676.

To all whom it may concern:

Be it known that I, HENRY B. COOLEY, a citizen of the United States, residing at Kensington, in the county of Hartford and State of Connecticut, have invented a new and Improved Apparatus for Regulating the Delivery of Drinking-Cups, of which the following is a specification.

My invention relates to the class of apparatus within which drinking cups or like devices are temporarily placed, and from which they may be obtained when required for use, and an object of my invention, among others, is to provide a device of this class that is extremely simple in its construction and particularly efficient in its operation.

One form of apparatus embodying my invention and in the construction and use of which the objects herein set out, as well as others, may be attained, is illustrated in the accompanying drawings, in which—

Figure 1 is a view in side elevation of an apparatus embodying my invention, with parts broken away to show construction, the mechanism being shown in position to release a cup for delivery to the user.

Fig. 2 is a view in section through the case and the coin chute, illustrating the mechanism in side elevation and with the parts in their normal position of rest, the point of view being on the opposite side of the apparatus from the point of view of Fig. 1.

Fig. 3 is a view in section through the apparatus on plane denoted by the broken line in Fig. 2.

Fig. 4 is a detail view of a portion of the apparatus showing the position to which the parts have been moved when the coin is at the outlet end of the coin chute, the mechanism being viewed in side elevation.

Fig. 5 is a detail front view showing a portion of the parts in the same position as illustrated in Fig. 4.

Fig. 6 is a detail view showing the position of the cup feeding detents at the time of release of a cup therefrom.

Fig. 7 is a detail view showing these detents in an intermediate position.

In the accompanying drawings the numeral 8 indicates the back plate of my improved apparatus from which plate a shelf or top plate 9 projects. A case 10, forming the bottom, side and front walls of an inclosure within which the mechanism is located, is secured to the back plate 8 in any suitable manner, the shelf 9 forming the top of this inclosure. A neck 12 rises from the top plate that has an opening 11 therein, said neck having a shoulder 13 that receives the lower edge of a dome 14, formed of glass or other suitable material, within which the cups are stacked or nested, the lower end of the stack projecting through the neck and into the inclosure within the case.

A base 15 of the neck has housings 16 on opposite sides within which cup feeding detents 17 are rotatably mounted in bearings 18, each detent having a releasing dog 19 and a detaining dog 20, preferably rigidly fixed with respect to each other and projecting from the body of the detent. The shaft 22 of each detent (there being a detent at each side of the stack of cups) has a tail 23 projecting from within the housing through the shelf 9 into the inclosure within the case, a spring 24 secured to and extending between the tails, holding them and the releasing and detaining dogs in their normal positions, and at rest.

A coin slot 25 is formed through the shelf 9, a coin chute 26 extending from said slot downwardly and toward the back plate. A trip lever 27 is secured to a trip lever shaft 21 mounted in brackets 28 and 61 projecting from the back plate. A finger 29 projects from the lever at one side of the apparatus into the coin chute, and a foot 30 extends from said lever in position to strike a catch lever 31 to be hereinafter described. It will be understood that the lever 27, specifically described as located at a certain side of a stack of cups, and its attached parts, as well as parts connected to an actuating shaft 32 to be now described, are duplicated on the opposite side of said stack, and the following description when applying to the members composing one part only of a cup delivery mechanism will be understood as applying equally to the other part of said mechanism, it being further understood that either or both of these mechanisms may be employed as desired, one of the mechanisms on one side only of the stack of cups in many instances serving the purpose fully.

The finger 29 rests normally in the path of movement of a coin or like device in the coin slot, said finger requiring to be pushed aside by the coin before the latter may pass along the chute, a spring 57 holding the lever with the finger in the position described. The actuating shaft 32 is rotatably mounted in bearings 33 within the inclosure, a handle 34 secured to the shaft outside of the case serving as a means for rotating said shaft in one direction, and a spring 35, preferably coiled about the shaft, rotating it in the opposite direction. Arms 36 are secured to the shaft and project forwardly therefrom, these arms having rests 38 upon which the bottom of the stack of cups is supported. Spring actuated grip fingers 39 are pivotally mounted in the ends of the arms, one end 40 of each finger being of hook shape to engage the inner surface of beads 41 at the bottom of the cups 42, the opposite end 43 of each finger having a finger actuating spring secured thereto, and the opposite ends of said springs being attached to the lower edges of the arms 36. The grip finger holding catch levers 31 are pivotally mounted on the arms 36, and their lower ends are formed into catches 45 to engage the lower edges of the grip fingers, the upper end of each catch lever constituting a nose 58 located in the path of movement of the foot 30 on the trip lever 27, and a projection 46 from each catch lever receiving one end of a spring 47, by means of which the catch lever is held in position to engage and hold the grip finger.

A controller 48, secured to the shaft 32, has a shoulder 49 to be engaged by a controller detent 50 located at one end of a detent lever 53 pivotally supported on the bracket 28, said lever having a coin releasing end 52 to temporarily retain a coin, a coin release 51, in the form of a projection or tooth from the controller 48, engaging an end of the lever and moving it to release the coin and permit it to fall.

Guides 54—55 are secured to the case and back plate to direct movement of the cups as they are passed downwardly by the mechanism, in the operation of which, a coin 56 is placed in the coin slot 25 against the finger 29, that, by pressure upon the coin is pushed downwardly moving the trip levers 27 on their pivots and carrying the feet 30 into contact with the noses 58 on the catch levers, that move to disengage the catches 45 from the grip fingers 39. The latter being released are forced by their springs against the inner surface of the bead on the bottom of the bottom cup in the stack, gripping said bead between the hooked fingers and the side of the arms 36 above the rests 38, the stack of cups being supported on said rests as hereinbefore stated. As the finger 29 is moved out of the coin chute the coin passes over the end of the finger and along the chute and rests at the outlet end thereof upon the coin releasing end 52 of the detent lever 53, the weight of the coin moving the lever to disengage the detent 50 from the shoulder 49, the coin being temporarily held in this position with the detent disengaged from said shoulder.

The shaft 32 is now free to be rotated as by means of the handle 34, which rotation carries the arms 36 downward, and with them the grip fingers 39, which hold the bottom cup of the stack, and said cup is, therefore, separated from the stack and carried downward. In this downward swinging movement of the arms 36 the ends 43 of the gripping fingers engage releasing arms 59 projecting from the back plate, said arms moving the fingers on their pivots and releasing them from grip on the cup. The continued swinging movement of the arms causes them to pass from underneath the cup, and the latter, directed by the guides 54 and 55, falls through the delivery opening 60 in the bottom of the case 10. Contact of the ends 43 of the fingers with the arms 59 moves said fingers into position to permit the catches 45 to reëngage them and hold them in this position, the ends 43 being now so located that they will freely pass the arms 59 as the mechanism returns to its normal position of rest.

In the rotation of the shaft 32 the coin release 51 on the controller engages the detent 50, swinging the detent lever to an extent to release the coin and permit it to drop out of the outlet end of the chute 26, and into a proper receptacle provided for it, the controller being recessed as at 37 to permit passage of the coin between it and the back plate.

As the cup is pulled downward by the gripping mechanism the cup feeding detents are rotated in their bearings, moving the releasing dogs downwardly until they are in position to permit the cup to fall, and at the same time the detaining dogs are moved into position to underlie the lip at the upper edge of the second cup from the bottom one in the stack, which, after the removal of said bottom cup becomes the bottom cup in the stack. As soon as the bottom cup is released from the dogs 19 the detents move upwardly under the pull of the spring 24, the detaining dogs in this movement snapping past the lip of the cup underneath which they have been engaged, and the now bottom cup moves downwardly and rests upon the dogs 19.

While I have shown and described herein a satisfactory construction of mechanism for carrying my invention into effect it will be understood that this may be departed from to a greater or lesser degree and yet

be within the spirit and intent of the invention.

I claim—

1. A cup delivering apparatus including means for supporting a stack of cups in an upright position, gripping jaws to seize the bottom of the bottom cup in the stack, means for moving the gripping jaws to separate the bottom cup from the stack while it is held against downward movement, and means for operating the gripping jaws to release said bottom cup.

2. A cup delivering apparatus including means for supporting a stack of cups in an upright position, gripping jaws to seize the bottom of the bottom cup of the stack, means for moving the gripping jaws to separate the bottom cup from the stack, means for operating the gripping jaws to release said bottom cup, and means for retaining the stack in place during the removal of the bottom cup therefrom.

3. A cup delivering apparatus including means for supporting a stack of cups each having a bead around its bottom, means for gripping the bead of the bottom cup in the stack, means for moving the gripping means to separate the bottom cup from the stack, and means for operating the gripping means to release said bottom cup.

4. A cup delivering apparatus including means for supporting a stack of cups at the bottom thereof, means for gripping the bottom of the bottom cup in the stack, means for operating the gripping means to separate the bottom cup from the stack, means for operating the gripping means to release said bottom cup, and means for retaining the stack in place during the removal of the bottom cup.

5. A cup delivering apparatus including means at the bottom of a stack of cups upon which said stack is supported, means for gripping the bottom of a cup, means for moving said gripping means to separate the bottom cup from the stack, means for operating the gripping means to release the bottom cup, and means to engage the upper edges of the cups to retain the stack in position during the removal of the bottom cup therefrom.

6. A detent for a cup delivering apparatus, said detent including a releasing dog and a detaining dog having an oscillating movement in the direction of delivery movement of the cups, said releasing dog being positioned to engage the under side of a bead at the upper edge of a cup in a stack and the detaining dog being positioned to engage the under side of a bead on the next succeeding cup in said stack.

7. A detent for a cup delivering apparatus, said detent including a releasing dog and a detaining dog rigidly connected and having an oscillatory movement in the direction of releasing movement of cups from a stack, said dogs having their edges formed to partially encircle a cup body and said releasing dog being positioned to engage the under side of a bead at the upper edge of a cup in a stack and the detaining dog being positioned to engage the under side of a bead on the next succeeding cup in said stack.

8. A cup delivering apparatus including means for supporting a stack of cups in an upright vertical position, and a detent including a releasing dog and a detaining dog rigidly connected and having an oscillatory movement on a horizontal pivot, said dogs having their edges shaped to partially encircle a cup body, and the releasing dog being positioned to engage the under side of a bead on the upper edge of a cup in the stack and the detaining dog being positioned to engage the under side of a bead on the next succeeding cup in said stack.

9. A detent for a cup delivering apparatus, said detent including an oscillatory body part, a releasing dog rigidly secured to said body part and projecting in position to engage the under side of a bead at the upper edge of the bottom of a cup in a stack, a detaining dog rigidly secured to the body part and spaced from the releasing dog a distance slightly greater than the thickness of said bead, said detaining dog being positioned to engage the under side of the lip at the upper edge of the next succeeding cup in the stack and means for operating said dogs to move the dogs in the direction of movement of the cups.

10. A cup delivering apparatus including means for supporting the bottom of a stack of cups, means for withdrawing said supporting means, and a detent movably mounted near the upper edge of the bottom cup in the stack and including a releasing dog and a detaining dog rigidly connected and secured to said detent, the releasing dog to engage the under side of a bead at the upper edge of the bottom cup in the stack, and the detaining dog spaced from the releasing dog a distance slightly greater than the thickness of the bead on the cup, said detaining dog being positioned to engage the under side of the bead at the upper edge of the next succeeding cup in the stack and said dogs being movable in the direction of movement of the cups.

11. A cup delivering apparatus including an actuating shaft, means for actuating the shaft, a gripping device supported by and to move with said shaft, means for operating said gripping device to grasp the bottom edge of a cup in a stack, means for releasing said gripping device, and means for supporting the stack of cups while the bottom cup is being removed therefrom.

12. A cup delivering apparatus including

an actuating shaft, an arm secured to said shaft, means for actuating the shaft, a gripping device secured to said arm, means for operating said gripping device to grasp the bottom edge of a cup in a stack, means for releasing said gripping device, and means for supporting the stack of cups while the bottom cup is being removed therefrom.

13. A cup delivering apparatus including a movably mounted support with means for operating it, an arm secured to said support, a grip finger pivotally mounted on said arm, means for moving said finger in one direction to grasp the lower edge of the bottom cup in the stack, means for moving said finger to release the cup, said finger being arranged to be held in its released position, and means for supporting the stack of cups while the bottom cup is being removed therefrom.

14. A cup delivering apparatus including a movably mounted support with means for operating it, an arm rigidly secured to said support, a gripping finger having a hooked end positioned to engage the bead on the bottom of the lowermost cup in a stack, means for moving said finger in one direction to grip said bead, means for moving the finger in the opposite direction to release said bead, and means for supporting the stack of cups while the bottom cup is being removed therefrom.

15. A cup delivering apparatus including a movably mounted supporting member with means for operating it, an arm rigidly secured to said support, a rest on said arm for the support of a stack of cups, a finger pivotally mounted in said arm to engage the bead on the bottom cup of said stack and force it against the side of the arm, means for moving the finger in one direction to grip said bead, and means for moving the finger in the opposite direction to release said bead.

16. A cup delivering apparatus including a movably mounted support with means for operating it, an arm secured to said support, a finger pivotally mounted in said arm to grip the lower edge of the bottom cup in a stack, means for forcing the finger in one direction to grip a cup, means for moving it in the opposite direction to release the cup, said finger being arranged to be held in its released position.

17. A cup delivering apparatus including a movably mounted support with means for operating it, an arm secured to said support, a finger pivotally mounted in said arm to grip the lower edge of the bottom cup in a stack, a spring connected with the finger to hold it in gripped engagement with said cup, means for moving the finger in the opposite direction against the force of the spring to release the cup, said finger being arranged to be held in its released position.

18. A cup delivering apparatus including a movably mounted support with means for operating it, an arm projecting from said support, a grip finger pivotally mounted on said arm to grasp the lower edge of the bottom cup in a stack, means to move said finger in one direction to grip said cup, means to move said finger in the opposite direction to release the cup, said finger being arranged to be held in its released position, and an arm located in the path of movement of said finger to move it in one of said directions.

19. A cup delivering apparatus including a movably mounted support, an arm projecting from said support, a finger pivotally mounted on said arm to grip the bottom edge of the bottom cup in a stack, a spring for forcing said finger in one direction, said finger being arranged to be held in its released position, and an arm located in the path of movement of said finger to move it against the force of said spring.

20. A cup delivering apparatus including an arm, a finger pivotally mounted on said arm, a spring to move said finger to grip the bottom edge of the bottom cup in a stack, an arm located in the path of movement of said finger to release it from gripping engagement with said cup, said finger being adapted to engage a latch for retention in its open position.

21. A cup delivering apparatus including an actuating shaft with means for rotating it, an arm rigidly secured to said shaft, a rest for a stack of cups on said arm, a finger pivotally mounted and extending laterally thereof with its end positioned to engage the bead on the bottom of the bottom cup in a stack and forcing said bead against the side of the arm, means for moving said finger in one direction to secure said bead, and means for moving it in the opposite direction to release said bead.

22. A cup delivering apparatus including an actuating shaft, means for rotating said shaft, an arm projecting from said shaft, a rest located on said arm to support a stack of cups in position to be moved out from under said stack as the arm is swung by said shaft, a gripping finger mounted on said arm, means for actuating said finger to grasp the bottom edge of the bottom cup in said stack, and means to release said finger from the grip of said cup.

23. A cup delivering apparatus including an actuating shaft with means for rotating it, an arm projecting from said shaft, a rest for a stack of cups upon said arm, said rest being positioned to be moved out from underneath said stack as the arm is moved in the rotation of the shaft, a gripping finger pivotally mounted in said arm to grasp the bottom edge of the lowermost cup in said stack, means for forcing the finger in one direction to grip said cup, means for mov-

ing it in the opposite direction to release said cup, said finger being arranged to be held in its released position.

24. A cup delivering apparatus including an actuating shaft with means for rotating it in one direction, means for rotating said shaft in the opposite direction, an arm projecting from said shaft, a gripping finger pivotally mounted on said arm to grasp the bottom edge of the lowermost cup in a stack, a spring to force said finger into gripping engagement with the cup, means for moving the finger in the opposite direction to release the cup, said finger being arranged to be held in its released position.

25. A cup delivering apparatus including a movably mounted support with means for operating it, an arm projecting from said support, a finger pivotally mounted on said arm to grip the bottom edge of the lowermost cup in the stack, a spring to hold said finger in gripped engagement with said cup, means for moving said finger in opposition to said spring to release it from engagement with the cup, said finger being adapted to engage a latch for retention in its open position.

HENRY B. COOLEY.

Witnesses:
ROBERT CHRISTIE, Jr.,
THOS. W. EMERSON.