Feb. 21, 1967

B. L. BATES

3,304,933

SWIMMING POOL HEATING DEVICE

Filed May 6, 1966

2 Sheets-Sheet 1

Fig. 1

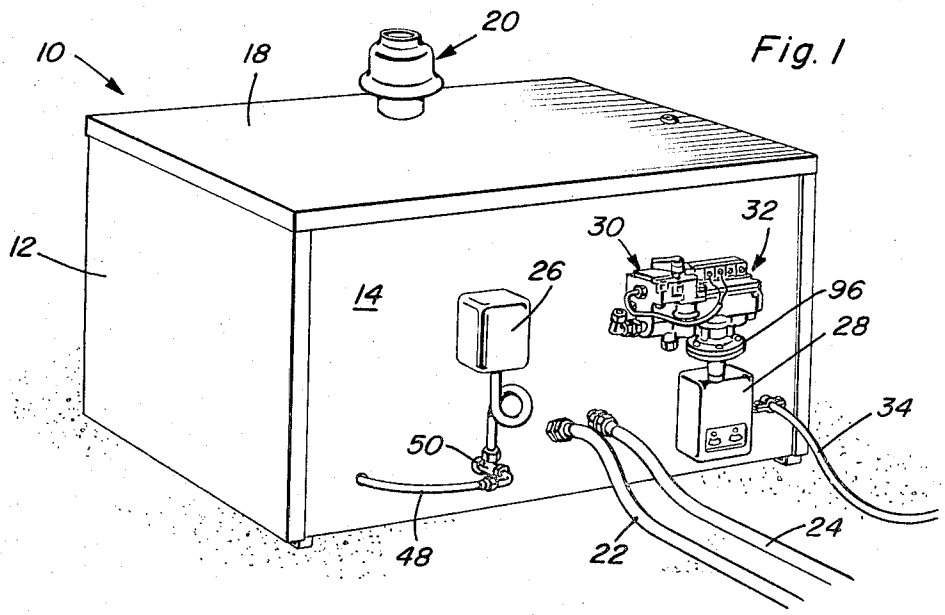

Fig. 2

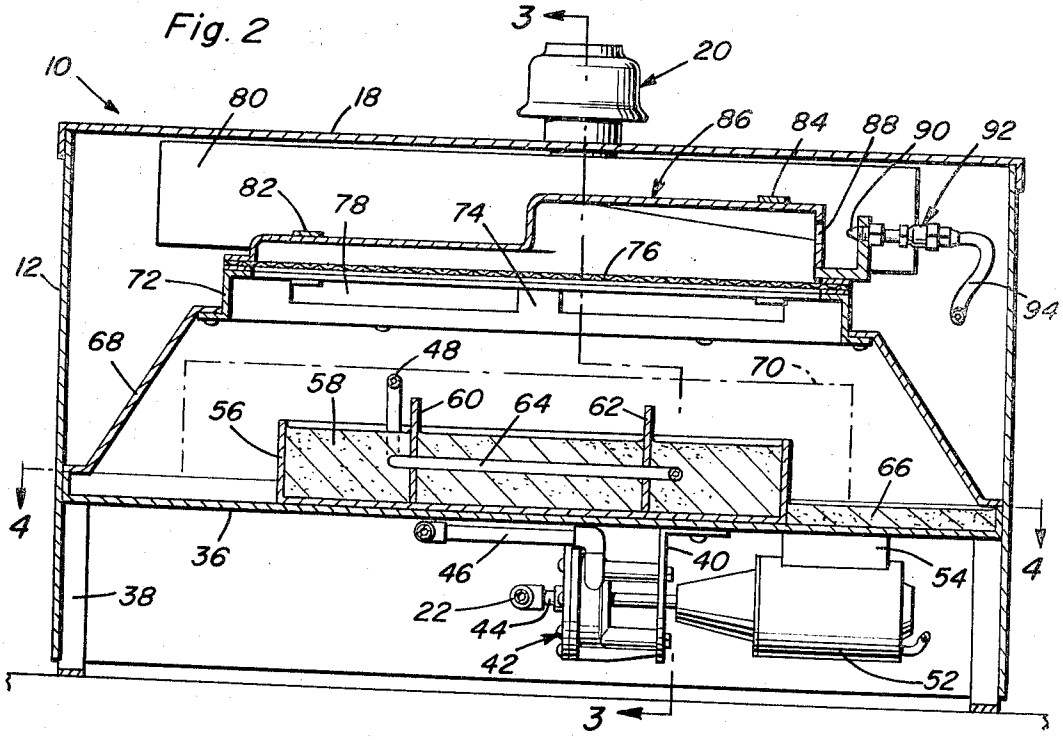

Bobby Lewis Bates
INVENTOR.

BY Clarence A. O'Brien and Harvey B. Jacobson
Attorneys

Feb. 21, 1967 B. L. BATES 3,304,933

SWIMMING POOL HEATING DEVICE

Filed May 6, 1966 2 Sheets-Sheet 2

Fig. 3

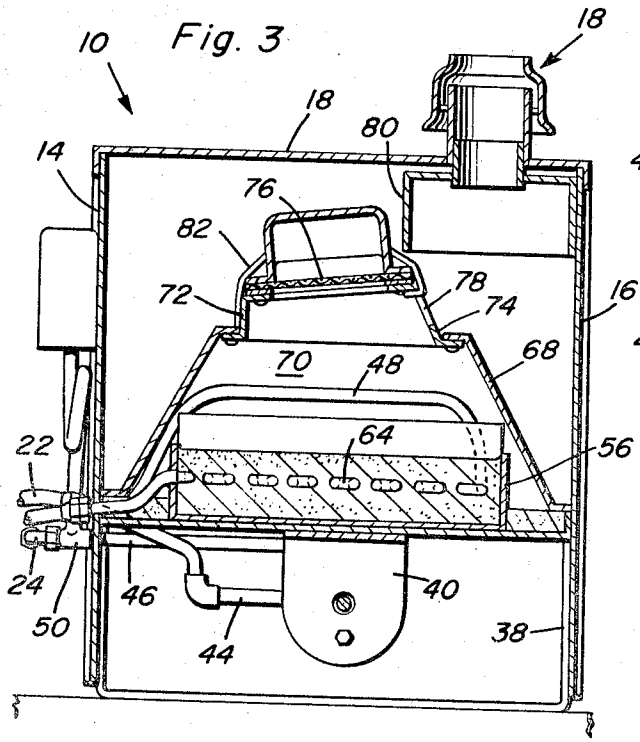

Fig. 5

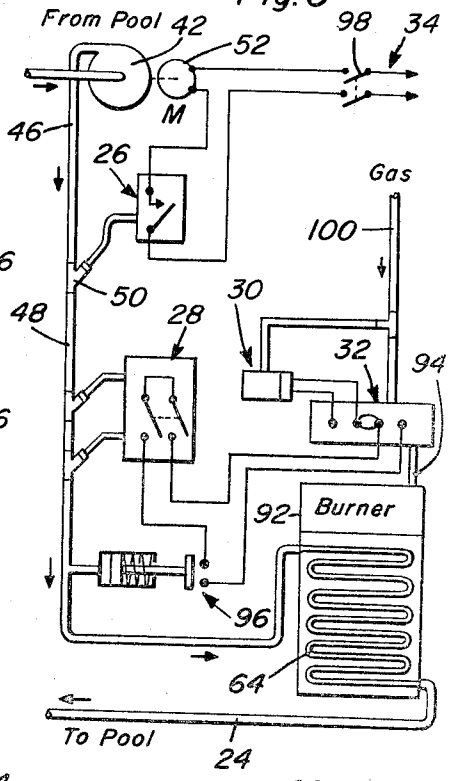

Fig. 4

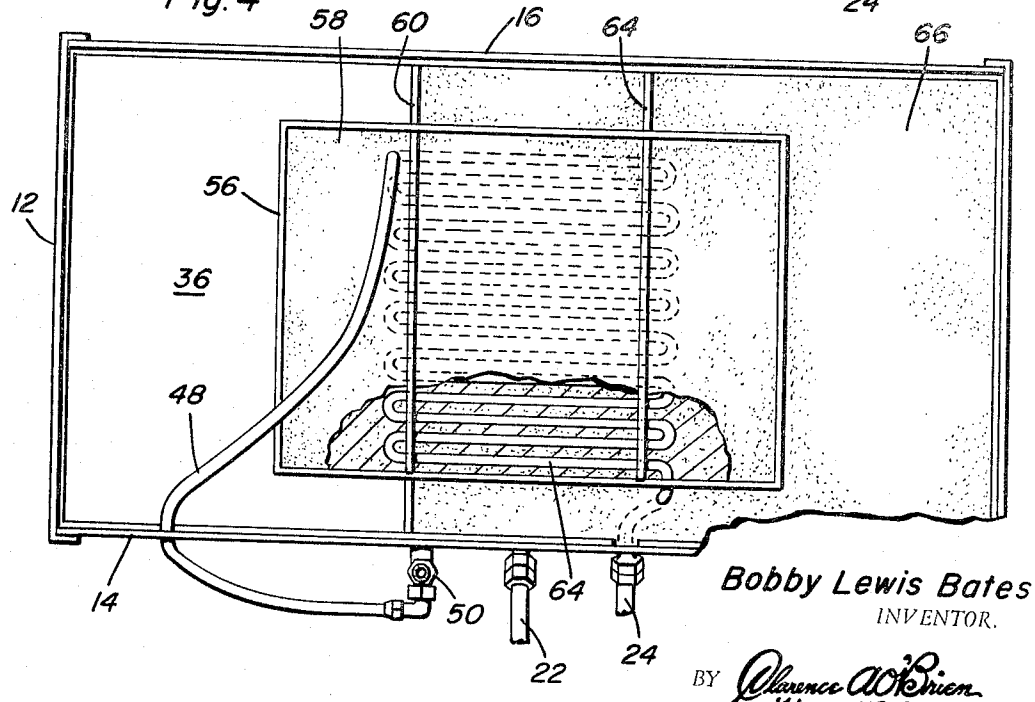

Bobby Lewis Bates
INVENTOR.

BY Clarence A. O'Brien and Harvey B. Jacobson
Attorneys

United States Patent Office 3,304,933 Patented Feb. 21, 1967

3,304,933

SWIMMING POOL HEATING DEVICE

Bobby Lewis Bates, 20007 Lanark, Canoga Park, Calif. 91306

Filed May 6, 1966, Ser. No. 548,176
9 Claims. (Cl. 126—350)

This invention relates to water heating devices and more particularly to a gas heating unit for swimming pools or the like.

The present invention pertains to a gas heating unit which is relatively portable and easily installed for heating a relatively large quantity of water to a predetermined temperature. The operation of the heating device is such as to consume a minimum amount of fuel or gas for heating purposes.

An outer enclosure supports the component parts of the heating unit including a predetermined quantity of silica sand within which a heating coil is embedded. A motor driven pump mounted below a partition within the enclosure above which the sand is supported, circulates water through the heating coil. An upwardly converging heating chamber is formed about the sand and the heating coil embedded therein including a top portion into which a burner emits a flame above a flame arresting screen in order to heat the sand which operates as a heating storing material from which heat is conducted through the walls of the coil into the water being circulated therethrough. An exhaust opening is formed on one side of the heating chamber just below the flame arresting screen so that combustion products may be exhausted and withdrawn from the enclosure through a flue mounted by a top closure associated with the enclosure. One of the side walls of the enclosure mounts an automatic gas control valve assembly through which fuel is admitted to the burner. Also mounted on the side wall are temperature and pressure controls by means of which fuel is supplied to the burner only when water is being circulated by the pump and operation of the pump is controlled intermittently in order to regulate the temperature of the water.

The heating unit of the present invention because of the foregoing arrangement is capable of operating more efficiently than heating devices heretofore utilized in connection with swimming pools. Further, the heating unit arrangement and construction is such as to facilitate maintenance and repair as well as replacement of parts or material.

These together with other objects and advantages which will become subsequently apparent reside in the details of construction and operation as more fully hereinafter described and claimed, reference being had to the accompanying drawings forming a part hereof, wherein like numerals refer to like parts throughout, and in which:

FIGURE 1 is a perspective view showing the heating unit of the present invention.

FIGURE 2 is a longitudinal sectional view through the heating unit shown in FIGURE 1.

FIGURE 3 is a transverse sectional view taken substantially through a plane indicated by section line 3—3 in FIGURE 2.

FIGURE 4 is a top sectional view taken substantially through a plane indicated by section line 4—4 in FIGURE 3.

FIGURE 5 is a schematic circuit diagram associated with the heating unit.

Referring now to the drawings in detail, FIGURE 1 shows the heating unit generally denoted by reference numeral **10** which may be placed in any suitable location adjacent to a swimming pool for heating the water

therein to a desired temperature. All of the heater components are mounted by an outer enclosure having vertical side walls including interconnected end walls **12**, a front wall **14** and a rear wall **16** as shown in FIGURES 3 and 4. The top of the enclosure is closed by a closure member **18** on which is mounted a flue device **20** through which combustion products are withdrawn from the interior of the enclosure. Access to the interior of the enclosure for repair and maintenance purposes is made possible by removal of the top closure member **18**.

Water from the pool is brought to the heating unit by means of an intake conduit **22** extending into the enclosure through the front wall **14** thereof. Water heated by the heating unit is also conducted through the front wall **14** by the outlet conduit **24**. The front wall also mounts a thermostat switch device **26**, a high temperature limiting thermostat switch device **28**, an automatic pilot generator **30** and a fuel supply control valve assembly **32**. Electrical energy is also brought to the control unit from an external source by means of the electrical power cable **34** entering the front wall **14** of the outer enclosure.

Referring now to FIGURES 2, 3 and 4, it will be observed that a horizontal partition supporting member **36** is mounted in spaced relation above the ground by means of the legs **38** and is secured to the side walls **12**, **14** and **16** of the outer enclosure. Supported in suspended relation below the member **36** by means of the bracket **40**, is circulating pump **42** of the centrifugal type having an intake conduit **44** to which the inlet conduit **22** is connected and a pressure discharge conduit **46** to which a discharge pressure line **48** is connected externally of the outer enclosure by means of a coupling fitting **50**. The pump **42** is driven by an electric motor **52** also mounted in suspended relation below the member **36** by means of the bracket **54**. The motor **52** is wired to the power cable **34** which extends from the heating unit to an external source of power as aforementioned.

Mounted above the member **36** is a rectangular bin or container **56** within which a heat storing material such as silica sand **58** is stored. A pair of parallel spaced, vertical supporting plates **60** and **62** extend transversely through the container **56** between the front and rear walls **14** and **16** of the enclosure in order to support a water conducting coil assembly **64** within the container **56** and hence embedded within the silica sand **58**. A body of silica sand **66** may also be disposed at a lower level on the member **36** about the container **56** so as to insulate the container from the side walls of the outer enclosure. One end of the water conducting coil assembly **64** is connected to the discharge line **48** from the pump while the other end of the coil assembly is connected to the outlet conduit **24** from which heated water is recirculated back to the pool.

Secured to the member **36** and converging upwardly therefrom, is a housing section **68** which encloses a heating chamber **70** above the body of sand **58**. Mounted on top of the housing section **68**, is a transitional section **72** having a pair of spaced longitudinal side walls one of which **74** is vertically larger than the other in order to mount a rectangular flame arresting screen **76** in laterally tilted relation to the housing section **68**. Exhaust openings **78** are formed within the side wall **74** so that combustion products may be withdrawn from the combustion chamber **70** on one side thereof substantially below the hood **80** secured to the lower end of the flue device **18** which projects into the enclosure from the top closure member **18**. It will therefore be apparent that the flue device is instrumental in withdrawing combustion products from the heating chamber **70** insulated from the walls of the outer enclosure.

Mounted on top of the transitional section 72, by means of the straps 82 and 84, is a flame confining housing section 86. One longitudinal end of the top housing section 86 is provided with an inlet opening 88 disposed in close spaced relation to the flame emitting nozzle end 90 of a gas fuel burner device 92 mounted in proper position relative to the inlet opening 88 by means of the bracket 94. The fuel burner device 92 is of the infra-red glower type energized by flow of microcurrent from the automatic pilot generator device 30 so that when fuel is supplied from the power assembly 32 to the burner through the fuel supply line 94, the fuel will be ignited producing an elongated flame which extends into the top housing section 86 above the flame arresting screen 76.

Gas valve assemblies and automatic pilot generators such as indicated by reference numerals 32 and 30, are of a type manufactured by Minneapolis-Honeywell Regulator Company referred to as "Powerpile Gas Valve" and "Powerpile Pilot Generator." Also associated with the valve assembly 32 as hereinbefore indicated, is the high temperature limiting thermostat switch device 28 of a type manufactured by Minneapolis-Honeywell Regulator Company and referred to as "Aquastat." The thermostat device 26 may also be of a type manufactured by Minneapolis-Honeywell Regulator Company and referred to as "Ambi-stat." Since the thermostat devices 26 and 28, the gas valve assembly 32 and pilot generator 30 in themselves form no part of the present invention, further description of the construction and operation of these components is deemed to be unnecessary. A detailed constructional and operational description is also deemed unnecessary with respect to a pressure responsive switch device 96 mounted between the thermostat device 28 and the gas valve assembly 32 as shown in FIGURE 1, this type of pressure responsive switch device also being manufactured by Minneapolis-Honeywell Regulator Company under the trademark "Pressuretrol."

Referring now to FIGURE 5, it will be observed that closing of the on-off switch 98 will complete an energizing circuit for the pump motor 52 in series with the switch associated with the thermostat 26 connected into the discharge line from the circulating pump 42 so as to sense any drop in the temperature of the water therein. When there is any drop in temperature below a predetermined value, the switch associated with the thermostat device 26 closes so as to complete the energizing circuit for the motor in order to initiate operation of the circulating pump 42. The rise in pressure produced by operation of the pump 42 is sensed by the pressure responsive switch 96 to close the contacts thereof. A circuit is thereby completed through the high temperature limiting thermostat device 28 in order to operate and open the main gas valve associated with the valve assembly 32, by conducting the micro-current developed by the pilot generator 30. A source of fuel is therefore connected by the fuel conduit 100 to the gas valve assembly 32 and the pilot generator 30. Thus, whenever the pump 42 is operating, the gas valve assembly will be energized and opened to supply gas through the supply conduit 94 to the burner device 92 for heating the sand within which the heating coil 64 is embedded. Whenever the temperature within the discharge line from the pump exceeds a predetermined limit, the switches associated with the thermostat device 28 open so as to interrupt the energizing control circuit for the valve assembly 32 shutting off the supply of fuel to the burner. Also, whenever the pump 42 is not operating, the control circuit associated with the gas valve assembly will be opened by the pressure responsive switch 96 in order to prevent supply of fuel to the burner. It will therefore be apparent, that after a predetermined warm-up period, the temperature of the water being heated will be regulated by intermittent operation of the circulating pump 42 and intermittent supply of fuel to the burner because of the storage of heat by the heat storing silica sand from which heat is transferred to the water being heated within the heating coil assembly 64. A minimum quantity of gas is therefore consumed.

The foregoing is considered as illustrative only of the principles of the invention. Further, since numerous modifications and changes will readily occur to those skilled in the art, it is not desired to limit the invention to the exact construction and operation shown and described, and accordingly all suitable modifications and equivalents may be resorted to, falling within the scope of the invention as claimed.

What is claimed as new is as follows:

1. A water heating device for swimming pools or the like comprising, an enclosure, means containing a heat storing material within said enclosure, a heating coil embedded in said heat storing material, a housing forming a heating chamber about the heat storing material and having an inlet opening and an exhaust opening, burner means mounted in close spaced relation to said inlet opening for emitting an elongated flame through said inlet opening into the heating chamber when supplied with fuel, a flame arrestor mounted within the housing between the inlet and exhaust openings, power operated pump means connected to the heating coil for circulating water therethrough, fuel supply valve means connected to the burner means for controlling a supply of fuel thereto and temperature control means connected to the pump means and the valve means for intermittently operating the pump means and opening the valve means to regulate the temperature of a predetermined quantity of water circulated through the heating coil.

2. The combination of claim 1 wherein said temperature control means comprises, a thermostat device for energizing the pump means in response to a drop in temperature of water conducted to the coil, and pressure responsive means for opening the valve means in response to operation of the pump means.

3. The combination of claim 2 including flue means connected to the enclosure for upwardly withdrawing combustion products exhausted into the enclosure from the exhaust opening.

4. The combination of claim 3 wherein said enclosure includes vertical side walls, a horizontal partition connected to the side walls supporting the means containing the heat storing material thereabove, the pump means being suspended below the partition, and a removable closure on top of the side walls mounting the flue means.

5. The combination of claim 4 wherein said housing comprises an upwardly converging section secured to said partition, a transition section on top of the converging section mounting the flame arrestor in laterally tilted relation and presenting the exhaust opening on one side below the flue means, and a flame receiving section on top of the transition section mounting the burner means at one longitudinal end thereof within which the inlet opening is formed, said valve means and temperature control means being mounted on one of the side walls.

6. The combination of claim 1 including flue means connected to the enclosure for upwardly withdrawing combustion products exhausted into the enclosure from the exhaust opening.

7. The combination of claim 6 wherein said housing comprises an upwardly converging section secured to said partition, a transition section on top of the converging section mounting the flame arrestor in laterally tilted relation and presenting the exhaust opening on one side below the flue means, and a flame receiving section on top of the transition section mounting the burner means at one longitudinal end thereof within which the inlet opening is formed.

8. A fluid heating device comprising, an enclosure, means containing a heat storing material within said enclosure, a heating coil embedded in said heat storing material, a housing forming a heating chamber about the heat storing material and having an inlet opening and an exhaust opening, burner means mounted in close

spaced relation to said inlet opening for emitting an elongated flame through said inlet opening into the heating chamber when supplied with fuel, a flame arrestor mounted within the housing between the inlet and exhaust openings, power operated pump means connected to the heating coil for circulating water therethrough, and flue means connected to the enclosure for upwardly withdrawing combustion products exhausted into the enclosure from the exhaust opening.

9. The combination of claim **8** wherein said housing comprises an upwardly converging section, a transition section on top of the converging section mounting the flame arrestor in laterally tilted relation and presenting the exhaust opening on one side below the flue means, and a flame receiving section on top of the transition

section mounting the burner means at one longitudinal end thereof within which the inlet opening is formed.

References Cited by the Examiner

UNITED STATES PATENTS

1,069,374	8/1913	Bell et al.	219—302
2,808,494	10/1957	Telkes	126—400 X
2,832,331	4/1958	Schwank	126—92
2,858,781	11/1958	Hexdall.	
2,911,513	11/1959	MacCracken	165—104 X
3,038,058	6/1962	Gordon	126—400 X
3,237,679	3/1966	Best	158—99

JAMES W. WESTHAVER, *Primary Examiner.*

R. A. DUA, *Assistant Examiner.*