No. 741,649. PATENTED OCT. 20, 1903.

H. W. FOSNAUGH.

CURTAIN FIXTURE.

APPLICATION FILED FEB. 11, 1902.

NO MODEL. 2 SHEETS—SHEET 1.

Fig. 1.

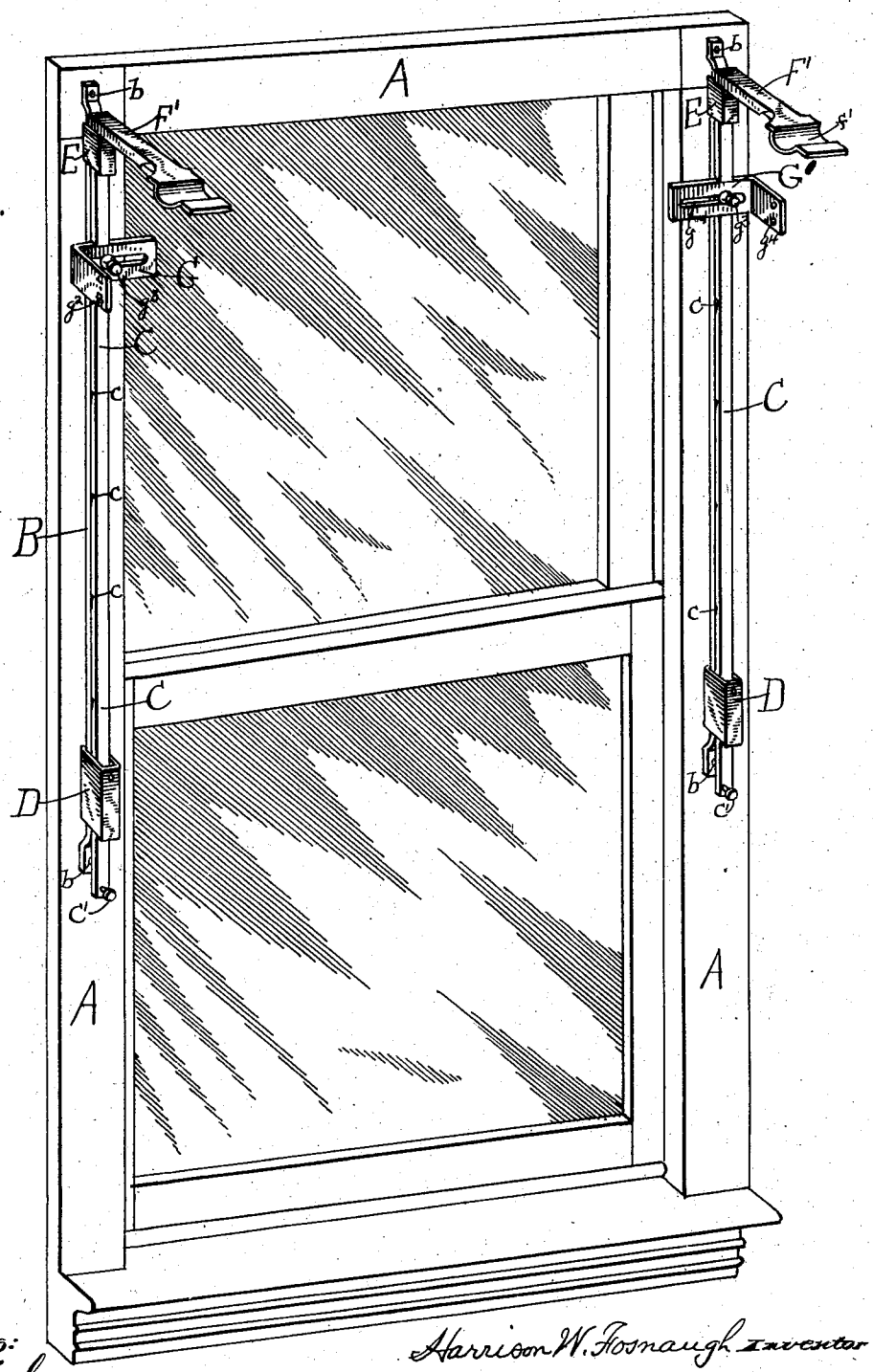

Witnesses:
J. P. Appleman,
H. W. Stevenson

Harrison W. Fosnaugh Inventor
By
J. H. Stevenson
Atty.

THE NORRIS PETERS CO., PHOTO-LITHO., WASHINGTON, D. C.

No. 741,649. PATENTED OCT. 20, 1903.

H. W. FOSNAUGH.

CURTAIN FIXTURE.

APPLICATION FILED FEB. 11, 1902.

NO MODEL. 2 SHEETS—SHEET 2.

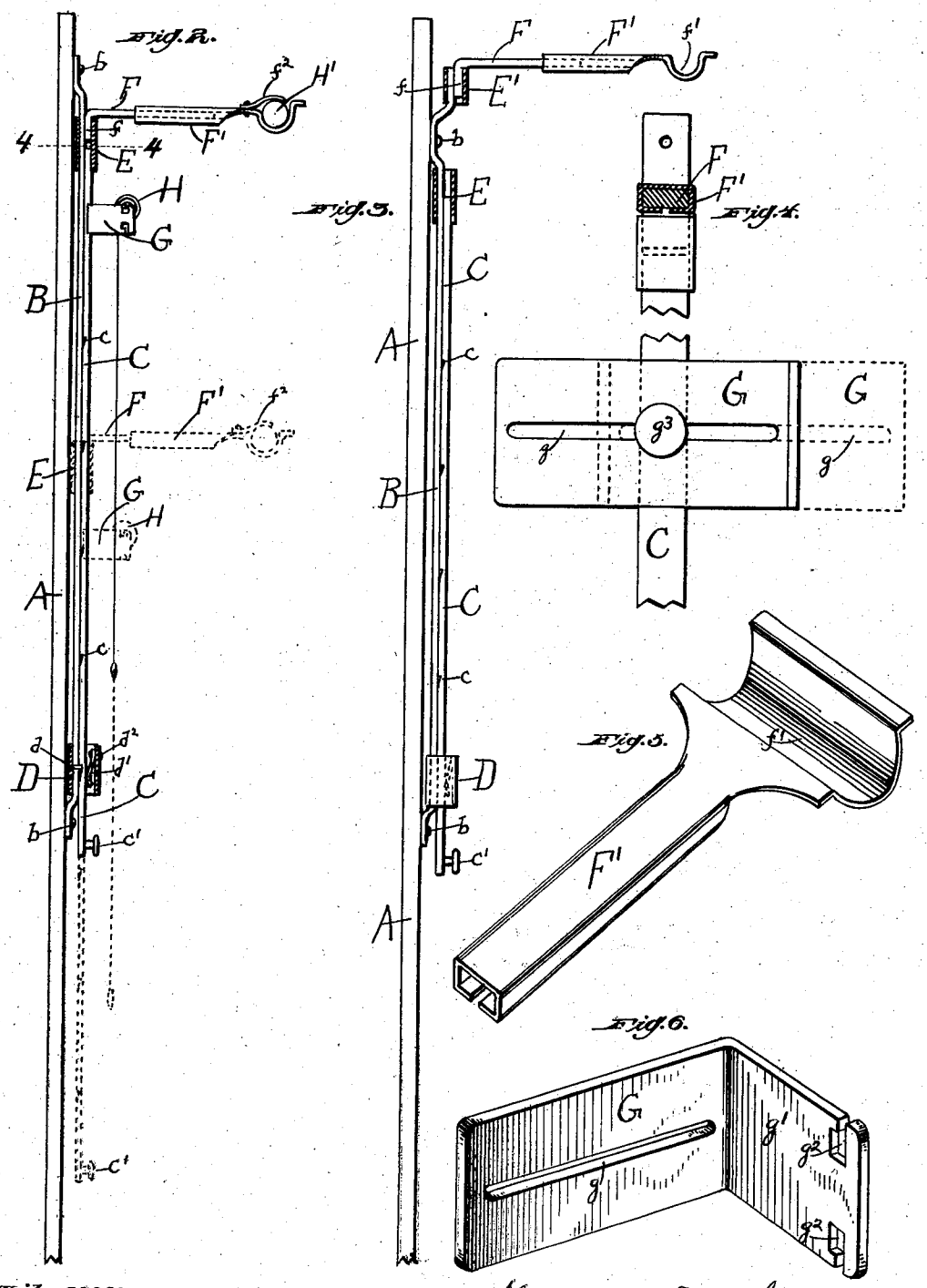

Witnesses:

J. P. Tiffleman,

H. W. Stevenson

Harrison W. Fosnaugh Inventor

By

J. H. Stevenson

Atty.

THE NORRIS PETERS CO., PHOTO-LITHO., WASHINGTON, D. C.

No. 741,649. Patented October 20, 1903.

UNITED STATES PATENT OFFICE.

HARRISON W. FOSNAUGH, OF McKEES ROCKS, PENNSYLVANIA, ASSIGNOR OF ONE-HALF TO JOHN H. STEVENSON AND HENRY W. STEVENSON, OF PITTSBURG, PENNSYLVANIA.

CURTAIN-FIXTURE.

SPECIFICATION forming part of Letters Patent No. 741,649, dated October 20, 1903.

Application filed February 11, 1902. Serial No. 93,611. (No model.)

To all whom it may concern:

Be it known that I, HARRISON W. FOSNAUGH, a citizen of the United States of America, residing at McKees Rocks, in the county of Allegheny and State of Pennsylvania, (whose post-office address is McKees Rocks, Pennsylvania,) have invented certain new and useful Improvements in Curtain-Fixtures; and I do hereby declare the following to be a full, clear, and exact description thereof, reference being had to the accompanying drawings, which form a part of this specification.

My invention relates to a plan for easily and quickly raising window-blinds and window-curtains, including the rollers and all attachments, so that from the floor a person can arrange, adjust, put on, and take off the blinds, curtains, or rollers at pleasure without the use of step-ladders or other means, as is generally required.

In the accompanying drawings, forming a part of this specification, Figure 1 is a perspective view of my newly-invented window-blind and curtain-fixtures in place on a window-frame. Fig. 2 is a side sectional view of the fixture on one side of the window with dotted lines showing how it may be lowered. Fig. 3 is a similar view showing a bracket-support permanently fixed to the rear guide. Fig. 4 is a view of the extensible and reversible bracket used by me in my device fixed on the front slide, and the view also shows a cross-section taken on the line 4 4 of Fig. 2. Fig. 5 is a perspective view of the extensible part of the curtain-pole hanger. Fig. 6 is a perspective view of my extensible and reversible bracket for the window-blind roller.

In the drawings, A A represent the window-frame to which my device is seen in position thereon.

B is the part of the device that is permanently fixed to the frame A at the top and bottom by nails or screws *b b*. This part B has a bent portion at the top and bottom, so formed as to allow a space back of the same or to prevent it from lying flat against the window-frame.

C is a sliding rod, near the top of which is fixed the sliding sleeve or box E and operating through the box D. This box D is permanently fixed to the guide B near its lower end. In this box D, I place a spring *d'*, attached to the same by a bolt or rivet d^2, also a pin *d*, extending through the guide B, so as to engage with the notches *c c* in the rod C. The spring *d'* forces the rod C against the pin *d* to make this engagement.

c' is a knob or handle to operate the slide C.

The brackets F F' are of ordinary construction, the latter sliding on the former. The part F has a bent portion *f* to fix it to the sleeve or sliding box E.

E' is a supplemental plan of fixing the brackets F and F' permanently to the guide B at the top, so that the curtain-pole may remain stationary while the blind is being operated up or down; otherwise the curtains and blind will be operated at the same time, as seen in Fig. 2.

G and G' are reversible and extensible brackets for the window-blind roller to rest on. *g* is an elongated slot in the part seated in the slides C, being secured thereto by a set-screw g^3. By means of these adjustable brackets they may be set for different-sized rollers as to length, being made to slide outwardly for longer blinds and by reversing them be made to suit shorter ones.

g' is the part of the bracket G formed at right angles with the other part and having the double seats g^2 for receiving the non-rotatable spindle of the window-blind roller, and g^4 represents perforations in the bracket G' for seating the rotatable spindle of the window-blind roller.

H designates the blind-roller, seated in the bracket G, and H' is the curtain-pole, seated in the U-shaped portion *f'* of the bracket F'.

f^2 is a spring arranged on the sliding bracket F' to hold the curtain-pole securely in place.

In operation of my curtain-fixtures, being made substantially as described and shown in the several views and being in position on the window-frame, the rod C is drawn slightly forward, thus releasing the contact with the pin *d*. The blinds and curtain may then be raised or lowered at will to any desired position, and by simply releasing the rod C the

spring d' forces the rod inwardly and a contact made with the pin and notches c. These notches are located at regular intervals on the under side of the sliding rod C. The blind-brackets G and G' may be seated on the slide C at other places by providing seats for the same therein.

Having thus fully shown and described my invention, what I claim as new, and desire to secure by Letters Patent, is—

1. The combination with a window-frame, of a bar B secured at its ends to said frame and offset therefrom between its ends, a sleeve fixed to the lower portion of said bar, a sleeve movable on said bar above the fixed sleeve, a movable rod connected at its upper end to the movable sleeve and its lower end extending through the fixed sleeve, said rod having a series of notches, a pin extending inwardly within the fixed sleeve to engage the said notches, a spring engaging the movable rod and normally holding it against said pin, and a shade-supporting bracket on the movable rod, substantially as set forth.

2. The combination with a window-frame, of a vertically-sliding rod having a transverse recess near its upper end, means connected to the frame for adjustably supporting said rod, a shade-supporting bracket fitting in said recess and having an elongated slot, and a set-screw extending through the slot into said sliding rod, whereby said bracket may be adjusted both vertically and laterally with respect to the said window-frame, substantially as set forth.

In testimony whereof I have hereunto affixed my signature in the presence of two subscribing witnesses.

HARRISON W. FOSNAUGH.

Witnesses:
H. W. STEVENSON,
S. A. SHAW.