May 6, 1941. L. R. TSCHOPP 2,240,917

ILLUMINATED SIGN

Filed Dec. 3, 1938 2 Sheets-Sheet 1

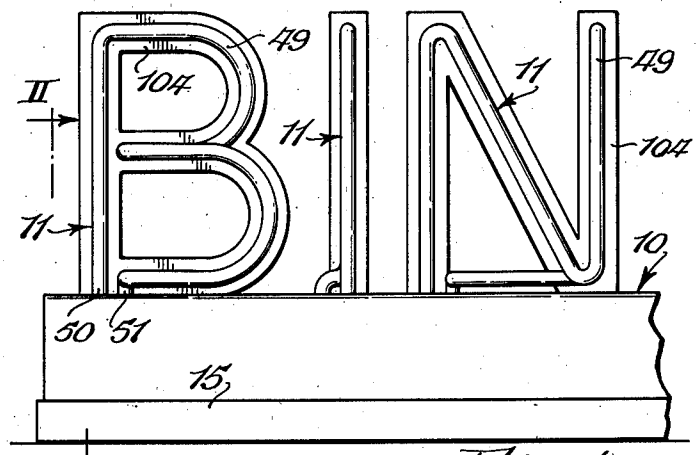

Fig. 1.

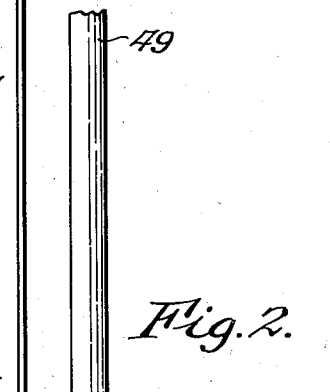

Fig. 2.

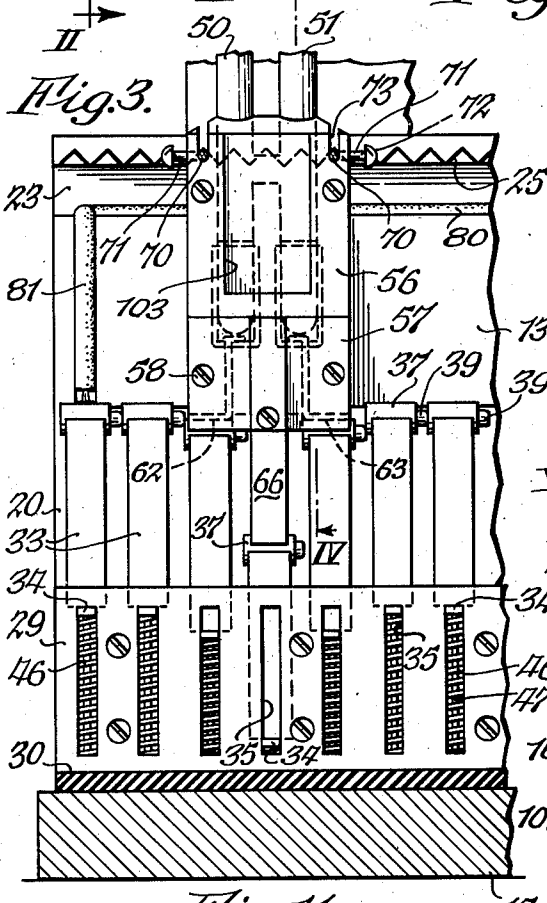

Fig. 3.

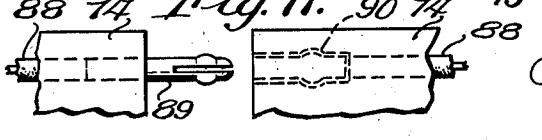

Fig. 11.

INVENTOR
LOUIS R. TSCHOPP
BY
Beau, Brooks, Buckley & Beau.
ATTORNEYS

May 6, 1941. L. R. TSCHOPP 2,240,917

ILLUMINATED SIGN

Filed Dec. 3, 1938 2 Sheets-Sheet 2

Fig. 4.

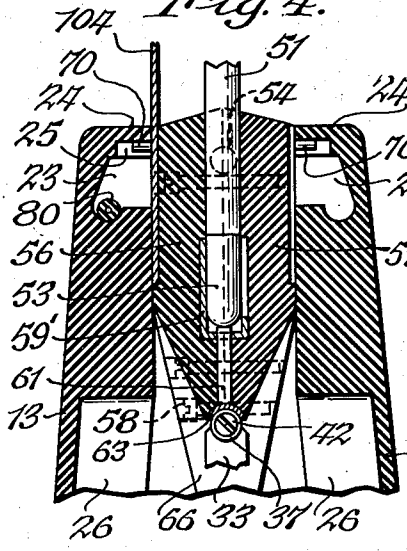

Fig. 5

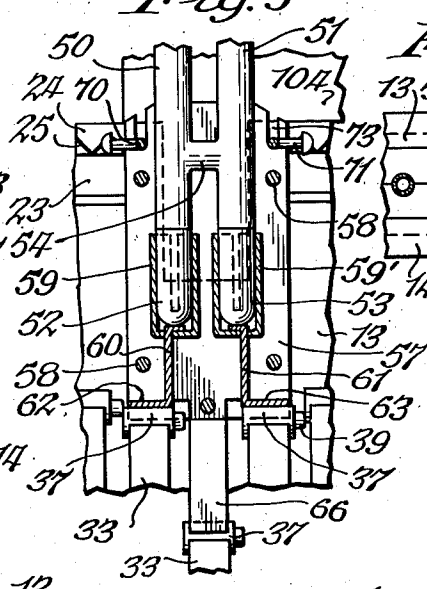

Fig. 10.

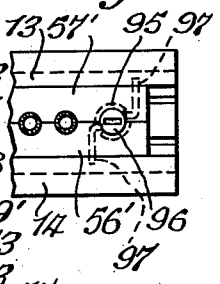

Fig. 6.

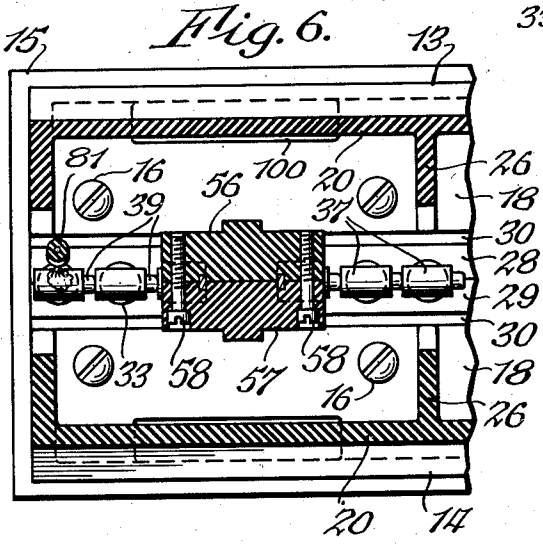

Fig. 7.

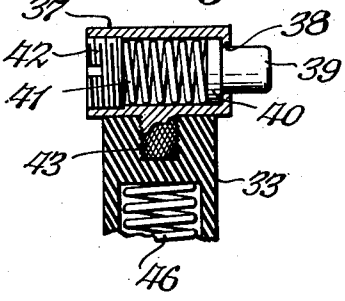

Fig. 8.

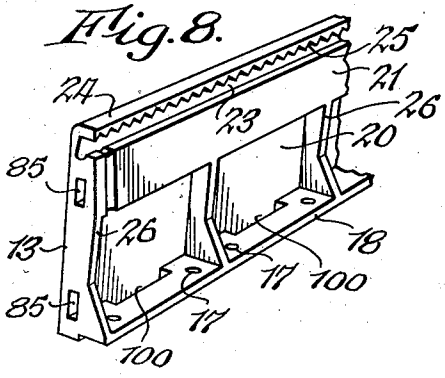

Fig. 9.

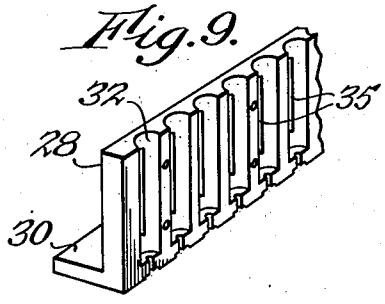

INVENTOR
LOUIS R. TSCHOPP
BY
Beau, Brooks, Buckley & Beau.
ATTORNEYS

Patented May 6, 1941 2,240,917

UNITED STATES PATENT OFFICE

2,240,917

ILLUMINATED SIGN

Louis R. Tschopp, Buffalo, N. Y.

Application December 3, 1938, Serial No. 243,827

4 Claims. (Cl. 40—130)

This invention relates to sign structures and particularly to such structures as contemplate an assembly comprising individual shiftable elements forming letters of the alphabet or other symbols.

It has heretofore been proposed to provide sign structures having a number of letters each including means for its illumination, the individual letters having electrical connection in one fashion or another with a common current source. Devices of this nature have not thus far found general acceptance owing to various inconveniences and undesirabilities inherent in their construction.

To be practically satisfactory a sign of this nature must be durable and structurally strong; it must adapt itself readily to mounting either exteriorly or interiorly; it must provide safe and certain electrical communication; the letters of the sign and the letter receiving means must be so formed and constructed as to facilitate the ready assembly of letters with complete selectivity both as to letter arrangement and spacing; and the construction must be sufficiently simple to render the production of the several elements comprising a finished sign possible at a cost which will be within practical limits.

A sign structure embodying the principles of my present invention and which achieves the foregoing objects is illustrated in the accompanying drawings in which:

Fig. 1 is a general fragmentary elevational view of a sign supporting structure having several letters associated therewith;

Fig. 2 is a cross sectional view on an enlarged scale taken on the line II—II of Fig. 1;

Fig. 3 is a cross sectional view taken on the line III—III of Fig. 2;

Fig. 4 is a fragmentary cross sectional view taken on the line IV—IV of Fig. 3;

Fig. 5 is a fragmentary elevational view similar to Fig. 3 but with one of the housing elements which form the plug removed and with the electrical conduit elements of the plug shown in cross section;

Fig. 6 is a horizontal view taken on the line VI—VI of Fig. 2;

Fig. 7 is a detailed cross sectional view of one of the elements which form a severable electrical conduit through the sign structure;

Fig. 8 is a fragmentary perspective view of one of the two complementary housing elements for the sign structure;

Fig. 9 is a fragmentary perspective view of an element which forms one half of supporting means for the severable electric conduit;

Fig. 10 is a fragmentary plan view showing an alternative means for securing individual sign elements in assembled position in the sign structure; and

Fig. 11 is a fragmentary elevational view showing means for establishing electrical contact between adjacent housing elements automatically upon assembly of such housing elements.

Reference will now be had to the drawings in which like characters of reference denote like parts and the numeral 10 in Fig. 1 indicates generally a supporting means for individual sign elements consisting of symbols or letters designated 11 in Fig. 1. The supporting means 10 is formed by a pair of elongated complementary casing members 13 and 14. One such element, 13, is shown in perspective in Fig. 8 and a pair of assembled elements 13 and 14 appear in transverse cross section in Fig. 2. As is shown in Fig. 2, the elements 13 and 14 are assembled in opposed spaced relation by securement to a common base means which may take the form of the block 15 and such securement is accomplished in the illustrated instance by screws 16 which engage preformed openings 17, see Fig. 8, in an inwardly projecting flange 18 provided at the bottom of each of the housing elements 13 and 14.

The upwardly extending side walls 20 of the elements 13 and 14 converge slightly and terminate upwardly in inwardly projecting portions 21 and 22 respectively which cooperate to provide a throat portion of reduced dimension therebetween. Each of the inwardly projecting portions 21 and 22 has a longitudinal groove 23 in its inner face and the grooves 23 form inwardly directed flanges 24 at the upper edge of each of the housing elements 13 and 14. The lower faces of the flanges 24 are serrated or notched as indicated at 25 in Fig. 3 for a purpose which will hereinafter appear. The side walls 20 of the elements 13 and 14 may be provided with reinforcing ribs as at 26 in Figs. 2 and 8.

Another pair of complementary members 28 and 29 are provided for the purpose of supporting electrical contact members and the members 28 and 29 are adapted to be rigidly assembled with the elements 13 and 14 in a manner which will now be described. One of the complementary members, the member 28, is shown in perspective in Fig. 9, and a member 28 and an oppositely formed complementary member 29 are disposed between the elements 13 and 14 as appears in Fig.

2. The members 28 and 29 are provided at their bases with outwardly directed flanges 30 which fit into recesses provided therefor in the flanges 18 of the elements 13 and 14 and are secured to the base block 15 in common with the elements 13 and 14 by the screws 16.

The members 28 and 29 cooperate to form a central upstanding flange which extends longitudinally and centrally of the space between the elements 13 and 14 and the elements 13 and 14 are initially provided with semi-circular grooves 32 which cooperate to form a longitudinal row of vertically extending aligned openings in the top of the assembled members 28 and 29. In each of the openings so formed there is disposed a tubular element 33, of insulating material, which is free to slide axially in the opening but is prevented, when in assembled relation, from leaving the opening entirely by means of oppositely extending feet 34 which engage vertically extending slots 35 formed in the members 28 and 29. The slots 35 stop short of the tops of the members 28 and 29 to thereby prevent the tubular elements 33 from leaving their respective openings and engagement of the feet 34 in the slots 35 serves the further purpose of preventing rotation of the tubular elements 33 in their respective openings.

Each of the tubular elements 33 is closed at its upper end and carries there an electrical contact element designated generally 37 and shown in detail in Fig. 7. Each contact element 37 comprises a horizontally extending sleeve having an inturned annular flange 38 at one end thereof, its opposite end being internally threaded. A contact pin 39 having an enlarged head portion 40 is disposed with its head 40 within the sleeve portion of the contact element 37 and retained therein by the flange 38. The body portion of the contact pin 39 is urged outwardly from the sleeve 37 by a spring 41 which bears against the head 40 of the contact pin and which is retained in the sleeve and given predetermined compression by the screw 42.

The sleeve 37 carries a mounting projection 43 which may or may not be integrally formed therewith. In the illustrated embodiment the projection 43 is shown knurled and may be assembled with the tubular element 33 at the time the tubular element is cast, if it be cast, although securement by screw threading or otherwise is contemplated.

Within each of the tubular elements 33 is a spring 46, one end of which bears against the upper closure of the tubular element 33 while the other end rests upon the elements 28 and 29 in the bottom of an opening 32. Retaining pins 47 may be assembled with the elements 28 and 29 as shown in Fig. 2 for preventing axial misalignment of the springs 46.

The tubular elements 33, the springs 46 and the spring pins 47 are all adapted to be assembled with the elements 28 and 29 at the time the latter are brought into assembled relation with each other and with the members 13 and 14. All of the springs 46 are given a predetermined initial compression so that each of the tubular elements 33 is normally disposed at its upper limit of movement as defined by engagement of the oppositely extending feet 34 thereof with the upper limit of its associated slots 35. The contact elements 37 associated with the several tubular elements 33 are thus normally disposed in horizontal axial alignment as appears in the case of the first two and the last two contact elements of the series appearing in Fig. 3.

The spacing of the tubular elements 33 and the amount of projection of the yieldable contact pins 39 is such that each contact pin 39 will bear resiliently against the adjacent end of an adjacent contact element 37 or the screw 42 associated therewith. The outer extremity of each contact pin 39 is somewhat rounded and the limit of outward movement of each of the contact pins is such that, after adjacent contact elements have been moved out of axial alignment, realignment is readily accomplished by virtue of a slight camming action on the end of the contact pin 39.

Up to this point I have described the construction of the relatively stationary supporting structure for the sign and I shall now direct my attention to the details of a preferred form of removable letter or symbol therefor. Such letter or symbol may include a hollow glass tube having its medial portion 49 bent or formed to represent the desired letter or symbol and having opposite terminal portions 50 and 51, see Fig. 5. The hollow glass tube 49 may be filled with Neon or other gas adapted to be rendered luminous by passage therethrough of an electric current and conventional electrodes, not shown, are positioned in the opposed terminal portions 50 and 51 of the tube.

To insure certain and ready electrical connection of each tube 49 the terminal portions 50 and 51 thereof are preferably provided with metallic caps or ferrules 52 and 53 respectively which have suitable conductors connected therewith and extending into the interior of the tube to support and supply energy to the beforementioned electrodes. If desired the terminal portions 50 and 51 may be provided with a reinforcing connecting portion 54 extending therebetween as shown in Fig. 5. It is to be understood that the connecting portion 54 is for structional purposes only and does not establish communication between the interiors of the terminal portions 50 and 51.

In order to provide means for assembling and positioning the letter or symbol with respect to the supporting structure complementary blocks 56 and 57 are provided. The blocks 56 and 57 are preferably formed of insulating material and may be of molded resin or the like. The blocks, 56 and 57, are adapted to be held in face to face contact by means of a plurality of screws 58 and their facing surfaces are provided with semi-circular grooves so arranged as to cooperate in receiving the terminal portions 50 and 51 and the connecting reinforcing portion 54.

When the blocks 56 and 57 are secured to each other the portion 54 prevents removal of the terminal portions 50 and 51 from the assembly. The facing surfaces of the blocks 56 and 57 are further grooved to receive metallic contact sleeves 59 and 59' and conductor bars 60 and 61 which extend therefrom and terminate outwardly of the blocks 56 and 57, preferably adjacent the bottom thereof, in longitudinally spaced electrical terminal or contact portions 62 and 63.

The terminal portions 62 and 63 are preferably arcuately formed as shown in Figs. 2 and 4 whereby they may seat intimately over the contact elements 37 of the sign supporting structure, with which elements they are adapted to cooperate in supplying electrical energy to the luminous tube 49. A downward extension 66 is provided upon the associated blocks 56 and 57 and such downward extension may be formed as an integral part of one only of the blocks 56 and 57.

In the illustration the downward extension is formed integrally with the block 57 and, as may be seen from an inspection of Fig. 2, the line of parting between the blocks 56 runs from the top straight down the middle approximately to the bottom of the contact elements 62 and 63, whereupon the line of parting runs horizontally to a lateral edge of the block 56 as indicated at 67. The downward extension 66 is, of course, of the same insulating material as the blocks 56 and 57 and serves to isolate the terminals or contacts 62 and 63.

The assembled blocks 56 and 57 are adapted to be disposed between the complementary casing elements 13 and 14 and to further this purpose the dimension across the assembled blocks 56 and 57 is slightly less than the space between the inwardly projecting portions 21 and 22 of the casing elements 13 and 14 respectively, whereby the blocks 56, 57 may be laterally guided and located by such surfaces.

In their combined upper surfaces the blocks 56 and 57 are grooved to receive means for maintaining the blocks and their engaged tube means in assembled relation with respect to the housing 13, 14. Such locking means are best shown in Figs. 2 and 3 and comprise T-shaped locking elements having transverse bar portions 70 and medial stems 71 fixed thereto and extending at right angles therefrom. The stems 71 preferably terminate in enlarged manipulating portions 72.

The upper surfaces of the blocks 56 and 57 are provided with transverse grooves 73 spaced from each longitudinal end of the assembly and central longitudinal grooves 74 which extend outwardly from each groove 73 to the end of the assembly. The length of each of the bar portions 70 of the locking means is greater than the width of the space between the portions 21 and 22 of the housing 13, 14 but substantially less than the distance across such space plus the depth of the two grooves 23 in the housing elements 13 and 14.

In assembling a letter together with its associated blocks 56 and 57 into the supporting structure formed by the elements 13 and 14, the blocks are inserted between the housing elements 13 and 14 and moved downwardly to a position slightly below that illustrated in Figs. 2, 3 and 4. The locking means is then applied with the stem portion 71 extending vertically, one end of the bar portion 70 being inserted in the transverse slot 73 and moved laterally under the flange 24 of one of the elements 13, 14 as far as it will go.

The other end of the bar portion 70 may then be lowered into the slot 73 and the bar portion 70 is then moved in the opposite direction until each of its ends is disposed beneath a flange 24 and until the stem portion 71 registers with the longitudinal groove 74. The locking means may then be pivoted about the axis of the bar portion 70 until the stem 71 lies in the groove 74 whereupon endwise movement of the locking means is prevented.

The blocks 56 and 57 are urged resiliently upwardly in a manner which will presently appear and consequently the ends of the bars 70, when manual downward pressure is removed from the blocks 56 and 57, will move upwardly into the depression 25 formed in the under side of the flanges 24, yieldingly preventing longitudinal movement of the blocks 56 and 57 and the letter or symbol carried thereby.

Electrical conduit means 80 may be received in depressions formed in the grooves 23 of the housing elements 13 and 14. The specific arrangement of wires may be varied to suit individual requirements depending upon whether one or more units 13, 14 are being employed and depending upon the location of the source of current outside the sign structure.

In discussing one exemplary arrangement we shall consider the housing elements 13, 14 appearing in Fig. 3 as constituting the left end of a series of such elements. Assuming that the current outlet is located somewhere in the vicinity of the right hand end of the series of elements, the conduit 80 will lead from such outlet and uninterruptedly along the combined groves 23 to the left hand end of the device where it is diverted as at 81 and connected electrically, as by soldering, to the extreme left hand contact element.

The extreme right hand contact element 37 is then connected electrically in a like manner to the other of the leads from the current outlet and the circuit, when no letters have been introduced into the sign structure, is from the outlet through the conduits 80 and 81 and back to the outlet through the conduit formed by the aligned contacting elements 37.

The lower portion of a letter or symbol with its supporting blocks 56, 57 appears in assembled position in the housing 13, 14 in Figs. 3 and 5. As there shown, the central downwardly extending portion 66 of the blocks 56, 57 has depressed a contact element 37 until it is wholly out of alignment with its associated contact elements 37 and the circuit directly through the series of contact elements is consequently broken at this point. The terminal portions 62 and 63 of the individual letters have, however, come into contact with contact elements 37 which lie on each side of the greatly depressed contact element and consequently the circuit, instead of being wholly interrupted, is shunted through the circuit which is provided in the body of the letter for the illumination thereof.

The proportioning of the parts is such that no precaution need be taken to have the portion 66 horizontally aligned with a single contact element 37. If it should happen that the portion 66, in assembling a letter, depresses two adjacent contact elements 37, the terminal portions 62 and 63 will still make contact with two contact elements 37 lying adjacent the two depressed contact elements 37.

It will now be clear that the source of the resilient tendency of the blocks 56 and 57 to be moved outwardly of the supporting structure is to be found in the action of the springs 46. To insure good electrical contact between the contact elements 37 and the terminal portions 62 and 63 the parts are so arranged that, in final assembly, the associated contact elements are depressed slightly, but not enough to interfere with contact with adjacent contact elements. Such depression causes the contact elements 37 to be held against associated terminal portions 62 and 63 by the action of their associated springs 46 and to this end the springs 46 may be provided with initial tension in assembly of the device.

It will be clear that as many symbols or letters as may be desired can be assembled readily and quickly in a supporting structure which may consist of one or any number of units 13, 14, the electrical circuit through the several letters being in series and established automatically upon insertion of the letter in the supporting structure.

To facilitate the assembly and proper location of a number of longitudinally aligned housing elements 13, 14, the elements 13 and 14 may be provided with mortises 85, at one end thereof, see Fig. 8, and complementary tenons at the opposite ends of each of the several housing elements 13 and 14.

Also with a view to more facile assembly, quick contact devices may be provided as illustrated in Fig. 11. In this figure two longitudinally aligned housings are fragmentarily depicted and each is provided with an electrical conduit 88 secured therein. One of the conduits 88 is provided with projecting terminal portion 89 and the other conduit with a female projection-receiving contact element 90. Conventional detent means may be provided.

A modified form of letter or symbol securing device is illustrated in Fig. 10 wherein the numerals 56' and 57' show supporting blocks analogous to the blocks 56 and 57 of the previously described embodiment. In lieu of the locking means 70, 71 a key operated tumbler lock, indicated at 95, is provided, the revolving plug 96 thereof being arranged to project and retract eccentrically connected pins 97 which perform the function of the bar 70 in the modification of Figs. 2 and 3.

To insure against the collection of moisture in the space between the casing elements 13 and 14, openings 100 are preferably arranged along the bottom flanges 18 of those elements and these openings may be caused to communicate with other openings provided in the base block 15 in a convenient manner as at 101 in Fig. 2.

The general usefulness of the sign of the present invention is augmented by the provision of surface depressions 103 in the outer lateral faces of the tube supporting blocks 56 and 57, see Figs. 2 and 3. Such depressions cooperate with the inner faces of the projections 21 and 22 of the casing elements 13 and 14 to form relatively narrow pockets for the reception of metallic or other elements 104 which follow the outline of the subject letter, see Fig. 1, and have lower extensions which enter the pockets for supporting the element 104. The elements 104 not only enhance the appearance of a finished sign but are useful for covering the backs of letters when the sign is displayed in a position where it may be viewed from its rear.

While specific details of construction have been referred to herein for the purpose of exemplification, it is to be understood that my invention is in no sense to be considered as limited thereby or in any other way save as defined in the appended claims.

I claim:

1. In an electrically illuminated sign, a channeled holder for interchangeable sign elements, sign elements comprising symbol portions and a mounting portion, said mounting portion having spaced electrical contacts and a projecting portion therebetween, and a longitudinally extending electrical conductor in said holder, said conductor comprising a continuous series of contacting sections, each section being yieldably mounted for movement into and out of contact with adjacent sections at each side thereof, whereby upon insertion of the mounting portion of a sign element into said channeled holder the projecting portion of the former is adapted to move a conductor section out of contact with adjacent sections and said spaced electrical contacts are adapted to contact said adjacent sections to establish electrical communication between said conductor and said sign element.

2. In an electrically illuminated sign, a channeled holder for interchangeable sign elements, sign elements comprising symbol portions and a mounting portion, said mounting portion having spaced electrical contacts and a projecting portion therebetween, and a longitudinally extending electrical conductor in said holder, said conductor comprising individual sections yieldably mounted for movement into and out of contact with adjacent sections at each side thereof, whereby upon insertion of the mounting portion of a sign element into said channeled holder the projecting portion of the former is adapted to move a conductor section out of contact with adjacent sections at each side thereof and such spaced electrical contacts are adapted to contact said adjacent sections to electrically associate said sign element in series with said conductor.

3. For use in an illuminated sign construction, a holder for a plurality of electrically illuminable sign elements, a sectional electrical conductor in said holder having the several sections thereof in normally contacting relation, and yieldable supporting means for each such section whereby said section may be moved from such abutting relation to interrupt the electrical circuit at that point and present terminals of opposite polarity for electrical engagement with a sign element.

4. For use in an electrically illuminated sign, a channeled holder for interchangeable sign elements, an electrical conductor in said holder and spaced from a wall thereof, said conductor comprising normally abutting sections each having yieldable supporting means associated with said holder whereby each section may be moved toward a wall of said holder and out of abutting relation with adjacent sections and thereby present terminals of opposite polarity for electrical engagement by a sign element.

LOUIS R. TSCHOPP.