June 23, 1931. E. FREI 1,811,786

STOCKING FOR VARICOSE VEINS

Filed July 25, 1929

Fig.5.

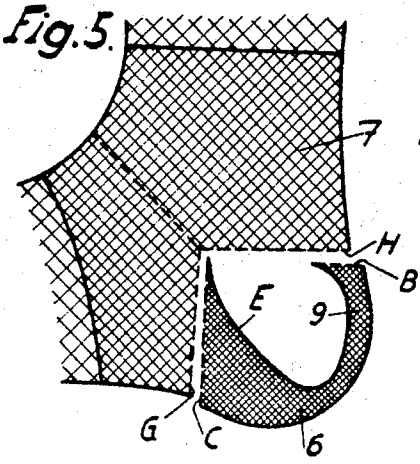

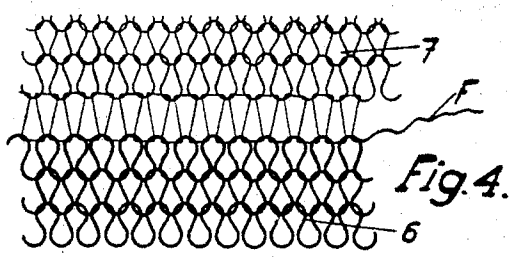

Fig.4.

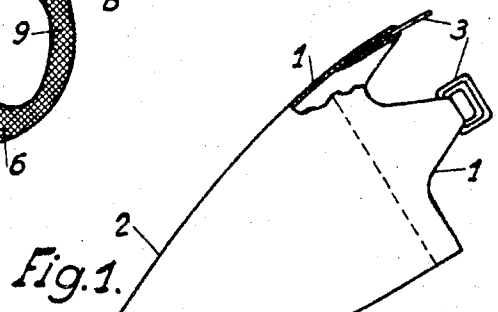

Fig.1.

Fig.6.

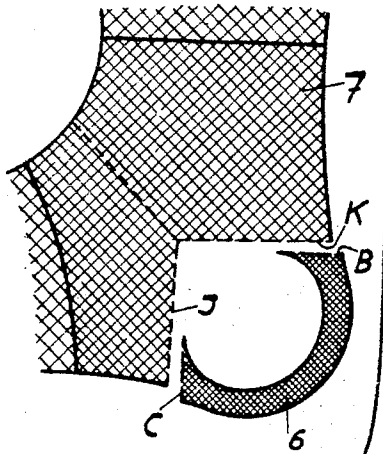

Fig.3.

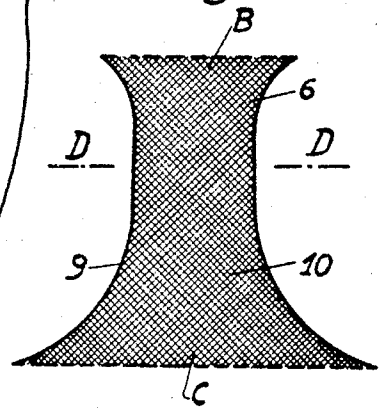

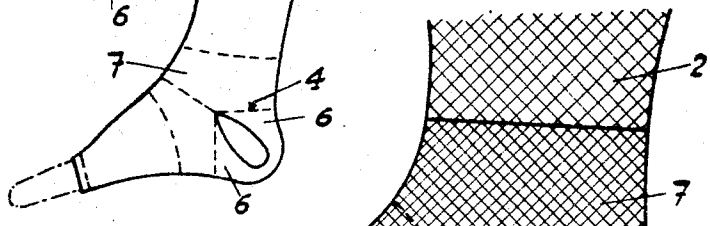

Fig.2.

Inventor
Elizabeth Frei
By B. Singer Atty

Patented June 23, 1931

1,811,786

UNITED STATES PATENT OFFICE

ELISABETH FREI, OF ZURICH, SWITZERLAND

STOCKING FOR VARICOSE VEINS

Application filed July 25, 1929, Serial No. 380,964, and in Switzerland November 22, 1928.

The invention relates to a new and improved knitted stocking for varicose veins and to an improved method of manufacturing the same by knitting.

The main object of the invention is to provide a knitted surgical stocking, which is not only made to fit more perfectly but is more comfortable and economical to the wearer.

A further object consists in the provision of a stocking of the kind aforesaid of which at least the heel portion is seamless, obviating thereby the pressure which in wear always is unpleasantly noticeable.

A further object consists in the provision of a rubberless surgical stocking which is elastic transversely while it is non-elastic longitudinally the pressure exerted by the stocking on the leg being uniform throughout.

A still further object of the invention consists in the provision of pulling tabs by which a strong pull, an even tension and a uniform compression of the leg and foot may be attained.

Another object of the invention is to provide a stocking with a separate heel portion, which heel portion may be detached when it has become worn out or soiled and replaced by a similar perfect piece.

It is a further object of my invention to provide in stockings of the type aforesaid such a detachable heel portion which provides openings at the side of the heel in that part of the stocking which covers the ankles.

A further object of my invention is to provide in knitted stocking having an opening or openings at the heels edges which lay perfectly flat on the foot.

I attain these and other objects by a knitted surgical stocking for varicose veins which is provided with openings in the portion covering the ankle so arranged at the side of the stocking that the whole of the heel and sole portion of the stocking forms a continuous uninterrupted surface. The said openings facilitate the drawing on and off of the stocking, whilst the necessary transverse pressure of the ankle and adjacent portions is retained.

In the accompanying drawings

Fig. 1 shows a stocking made according to the present invention;

Figs. 2 to 6 illustrate a plurality of forms of the stocking with a detachable heel in a diagrammatical manner;

Fig. 2 shows the heel portion detached from the body;

Fig. 3 shows the heel portion laid flat in a plane;

Fig. 4 shows the seam used to attach the heel to the stocking;

Figs. 5 and 6 illustrate two different shapes of the heel portion. The heel of Figure 5 can also be made in the reversed way, i. e. the larger part begins under "H" the narrower finishes under "G". According to the present invention, the knitting process begins with the pulling tabs 1 and is continued without interruption to the toe-end of the stocking.

The pulling tabs 1 are either of the same width throughout or are broadened towards their ends adjacent to the leg portion 2 of the stocking. This broadening may be brought about either by increasing the number of meshes or by other known or convenient methods pertaining to the knitting art.

As the tabs 1 are knitted to form one piece with the leg portion, they are relatively elastic and owing to the above mentioned broadening towards the leg portion 2 they allow a correct evenly-distributed pull and hence a uniform compression on the whole leg and on the foot. The free end of each pulling tab 1 is provided with fastening means, such as for example the double buckle 3, and is then bent over and knitted into the base of the top. The heel 6 as shown for example in Fig. 1 is made as follows: It is knitted in continuation to the leg portion 2 up to 4. The meshes of one portion of the leg are held on a comb or the like, after which the heel 6 is knitted separately. Soon after the first rounds the meshes are taken off on both sides in accordance with the size of the heel to be knitted. The narrowest part 5 of the heel 6 is reached at about the bend of the heel, whereupon the heel 6 is broadened again, i. e.

meshes are added as the knitting proceeds. When the X-shaped member 6 so formed has attained the necessary length, the machine is operated to knit the forward end of the stocking in tubular manner. The heel 6 so constructed provides substantially elliptical side openings 8 which render possible an even adjustment of the middle and front parts of the stocking and owing to the increased pressure in transverse direction, a proper compression of the heel and foot joint portion of the leg. The heel 6 and the joint portion 7 with adjacent parts are knitted with a plurality of threads and are by this means reinforced. The stocking may be made of cotton, silk, artificial silk, or wool, and of any other suitable material (for instance rubber-thread). The stockings may be manufactured partly of one and partly of another material for instance that cotton is used for certain portions and silk or wool for the other parts. The tabs might be made separately and connected to the upper edge in any suitable manner, and may be attached by sewing, knitting to the upper or lower edge of the border in the upper end of the stocking.

As shown in Figs. 2 and 3 the heel portion 6 is knitted separately in a shape given in Fig. 3. The leg portion 1 is knitted in the usual manner, the joint portion 7 reaches rather high up and is made of strong yarn or double yarn. The edge B of the heel portion is united to edge B′ and the edge C to the edge C′ of the heel opening. The heel 6, Fig. 3, is narrowed from the edge B to line D—D and is again broadened up to edge C. The longitudinal edges 9, 10 run in curved lines in such a manner that two substantially elliptical openings 8 are formed at that part of the stocking which covers the ankles. Even at the narrowest part at D—D the heel 6 is broad enough to give the foot a good and uninterrupted support, the openings 8 are outside the supporting part, the edges 9, 10 can have no injurious effect on the foot. The seam used for fastening the heel 6 to the leg 7 is illustrated in Fig. 4. The thread F is passed through two consecutive loops of the adjacent edges of the parts 6, 7. The seam thus produced is elastic and scarcely visible, it does not form a thickened portion which might press into the flesh and do harm to the foot. This seam is easily made and quickly undone so that the heel portion can easily be replaced by any person. By choosing heels 6 of different dimensions the stress which is applied by the stocking on the joint and heel of the leg can be varied.

The heel 6 might be made in such a manner that it has to be sewn to the leg portion at but one edge preferably with the edge B. The stocking after it has been knitted up to the heel opening is finished along the edges B′ and there taken off the knitting machine. Along edge C′ the knitting is again started for instance by looping by hand and the toe portion of the stocking is now finished. Now the heel portion 6 is knitted by the machine from the edge C′ and finished at B. The edge B is now connected to edge B′ by hand with the seam F.

The edges 9, 10 are perfectly flat, they do not roll up as it is common in all knitted stockings with openings at the heel known up to now.

In the stocking shown in Fig. 5, the heel 6 differs in shape from that shown in Figs. 2 and 3. The edge B is shorter than the edge H to which it is sewn by hand. The heel portion 6 is knitted by the machine from the edge G. The edges 9, 10 are formed substantially as shown in Fig. 3.

The stocking shown in Fig. 6 is provided with a heel 6 of which both edges B and C are shorter than the edges K and J to which they are attached either by knitting with the machine or by sewing by hand as shown in Fig. 4. The edges J and K are both formed looping by hand. Such edges do not roll-up, they lay absolutely flat as well as the edges 9, 10 if they do not run parallel each other.

The heel piece 6 might be made partly of rubber thread to increase the pressure on the foot according to requirement. The openings 8 are rather small, but being well placed they facilitate bending of the instep.

What I wish to secure by U. S. Letters Patent, is:—

1. A knitted surgical stocking for varicose veins, having an opening at the heel, the sides of which openings are at substantially right angles to each other and a heel portion inserted in said opening and the ends of which are stitched to the angularly related sides of the heel opening, said inserted heel portion being provided on opposite sides with substantially elliptical openings arranged with their axes coincident with a plane extending from the apex of the heel to the center of the instep.

2. A stocking as claimed in claim 1, in which the heel portion is continuous and seamless on the rear side and bottom between the openings.

3. A stocking as claimed in claim 1, in which the detachable heel portion is continuous and seamless on the rear side and bottom between the openings thereof and is provided with elastic threads.

In testimony whereof I affix my signature.

ELISABETH FREI.