United States Patent [19]

Babunovic et al.

[11] **3,897,821**

[45] **Aug. 5, 1975**

[54] **HEAT TRANSFER COIL**

[75] Inventors: **Momir Babunovic**, Des Peres; **Harry J. Wiskoski**, Florissant, both of Mo.

[73] Assignee: **Barry-Wehmiller Company**, St. Louis, Mo.

[22] Filed: **Aug. 3, 1973**

[21] Appl. No.: **385,432**

[52] **U.S. Cl.** **165/175**; 29/157.4; 134/107; 165/178

[51] **Int. Cl.** **F28f 9/18**

[58] **Field of Search** 165/117, 173, 175, 178, 165/128, 176; 29/157.4; 134/105, 107, 108

[56] **References Cited**

UNITED STATES PATENTS

2,733,899	2/1956	Lehmann	165/176 X

FOREIGN PATENTS OR APPLICATIONS

268,093	3/1927	United Kingdom	165/117
333,764	8/1930	United Kingdom	165/128
605,061	7/1948	United Kingdom	165/178

Primary Examiner—Albert W. Davis, Jr.
Assistant Examiner—Sheldon Richter
Attorney, Agent, or Firm—Gravely, Lieder & Woodruff

[57] **ABSTRACT**

Heating coil construction with compact arrangement of headers and pipes, and shaping of the pipes so that leak proof attachment of the pipe ends in the headers is easily achieved and internal drainage of heating fluid is obtained for all pipes and headers. The construction is designed for easy repair in the field if leaks occur.

1 Claim, 4 Drawing Figures

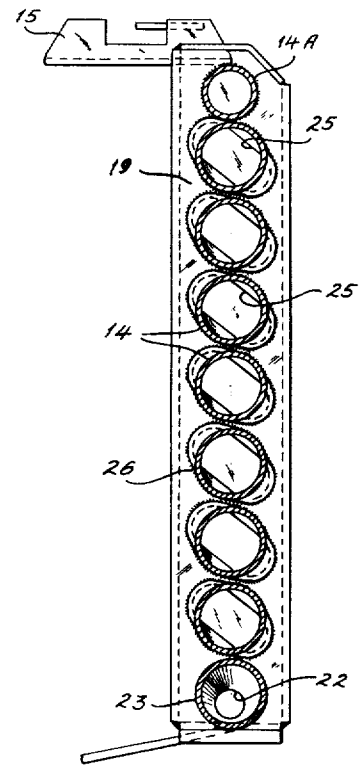

FIG. 1

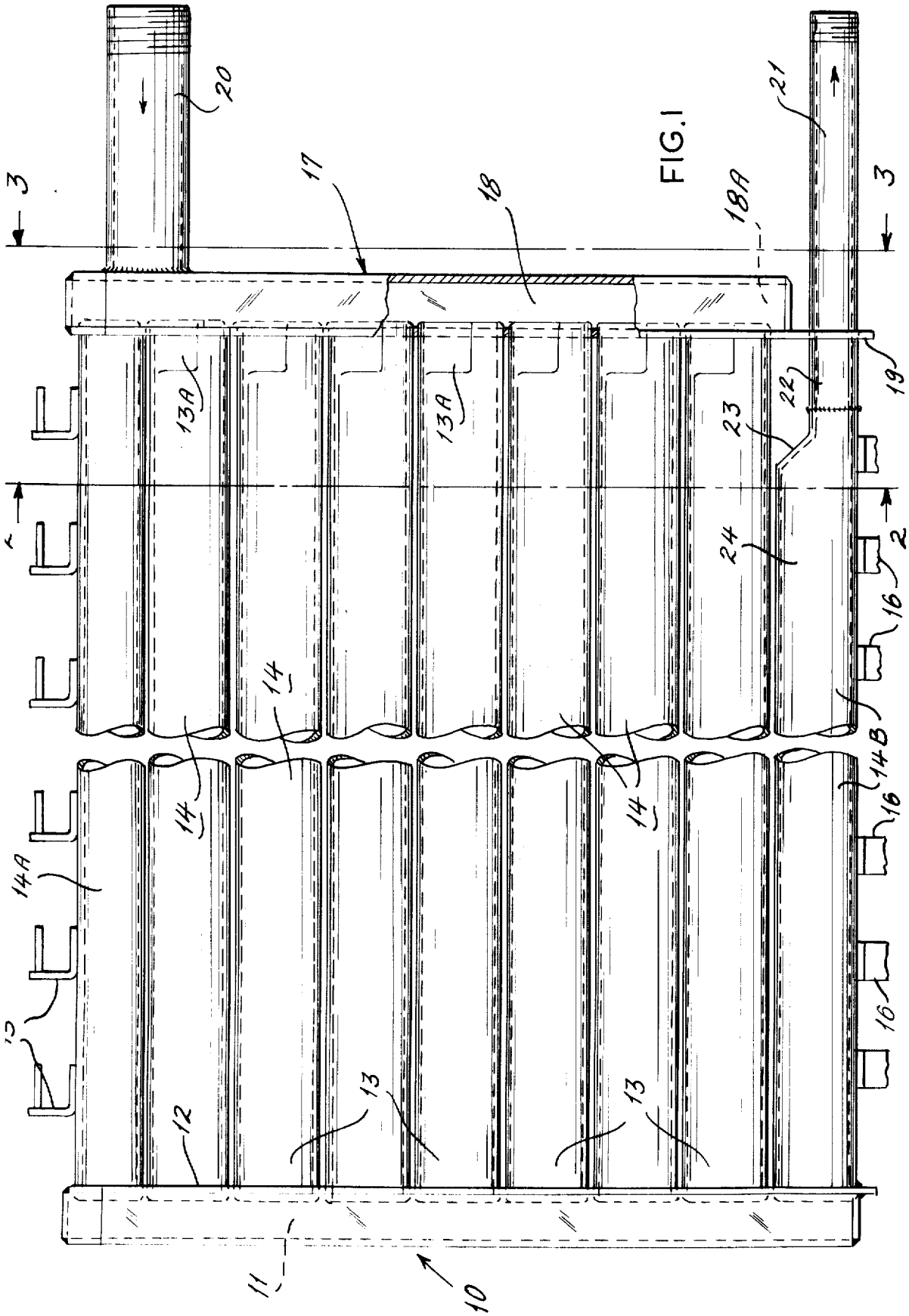
3
20
17
18
18A
21
3
19
13A
13A
22
23
2
24
16
14
14
14
14B
16
14A
16
13
12
13
13
11
10

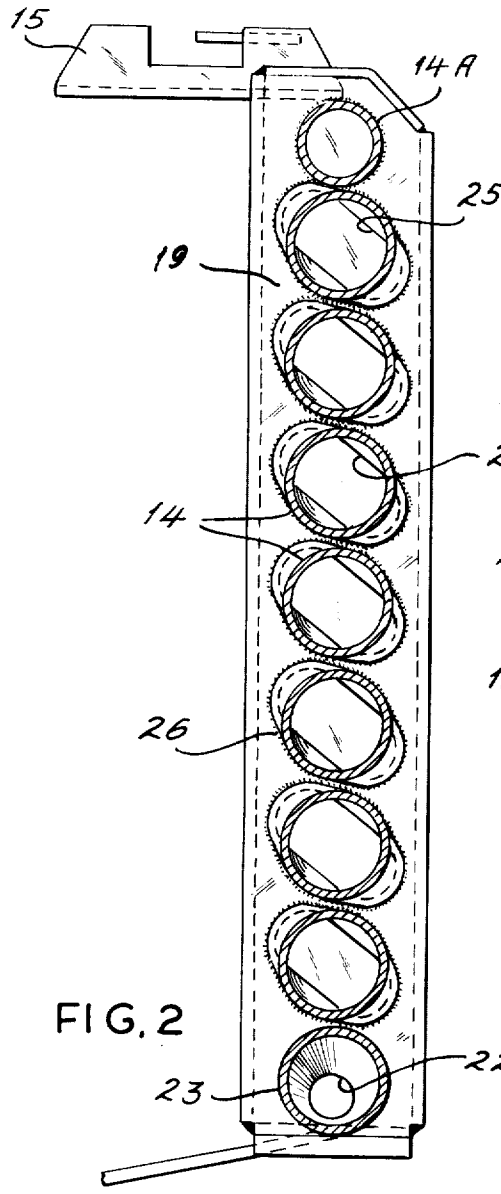

FIG. 2

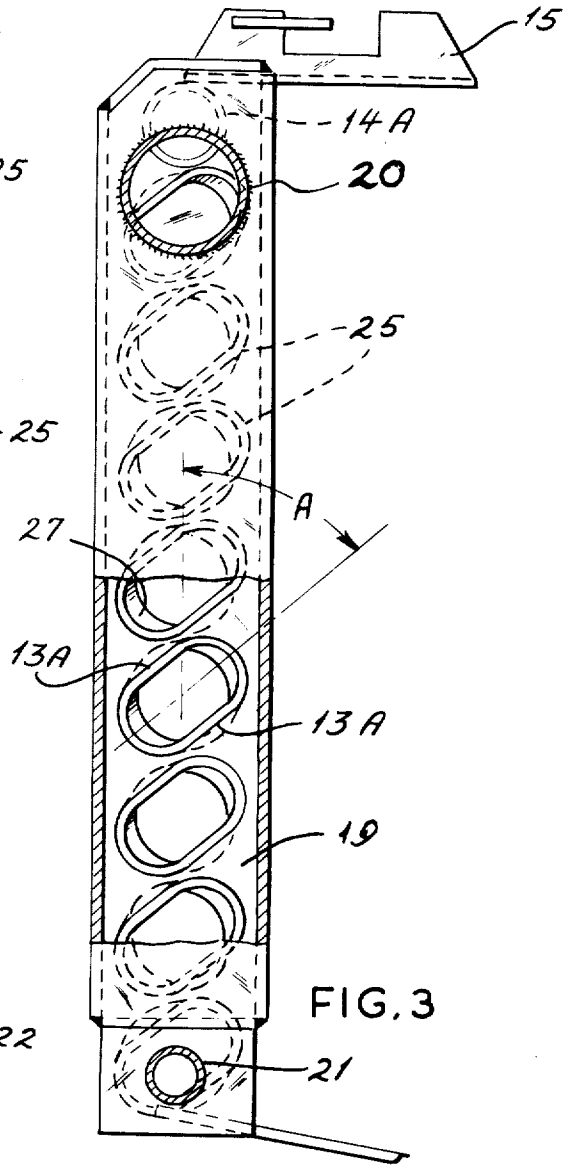

FIG. 3

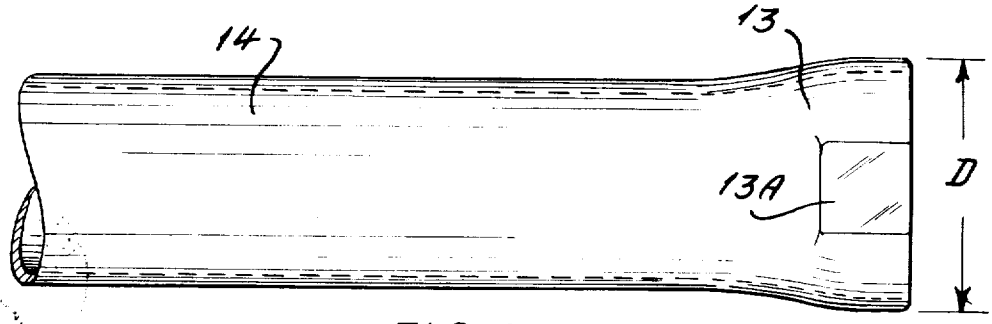

FIG. 4

HEAT TRANSFER COIL

BRIEF SUMMARY OF THE INVENTION

This invention pertains to improvements in heat transfer coils, and more particularly to coils employed in bottle washers utilizing washing solutions of a caustic character.

Washing apparatus for containers or bottles is intended to remove labels from the exterior and to cleanse the interior in preparation for reuse. The bottles are usually conveyed in pockets of a conveyor system that carry the bottles through several tanks containing caustic washing solution. The solution is very corrosive on metallic components, and in general the caustic is hign concentrations of sodium hydroxide, alkaline materials such as phosphates, polyphosphates, chelating agents and wetting agents.

In the washing apparatus, the washing solution is heated by heat transfer coils immersed in the washing solution. The heat, usually steam or hot water, increases the activity of the washing solution and helps sterilize the bottles. The environment for such coils, and they are usually embossed panel coils, is destructive in that pin holes develop along the grain boundaries where the metal has undergone embossing strain. The embossed sheets used to form panel coils undergo caustic embrittlement or intercrystalline cracking which is a form of corrosion characterized by cracking of the metal along the grain boundaries. The corrosion attack on the metal is usually in the areas of high concentrations of sodium hydroxide, as reported in Combustion Engineering by Otto de Lorenz (published in 1950). The solution to the problem of caustic embrittlement has been to use stress relieved panel coil sheets and to go to heavier gauge material, all of which has increased the cost beyond the reasonable level.

The heat transfer coil of this invention is constructed to approximate the compactness of panel coils, but to have the additional desirable features of low cost, extended life, and the capability of being repaired.

A preferred embodiment consists of a series of metallic pipes arranged in stacked relation (one above the other) and formed at its ends with flattened portions which, when angularly oriented, allow the placement of securing means around the periphery to form a fluid tight joint between the ends of the pipes and the face sheet of the headers. The face sheets are easily formed with oblong slots to mate with the flattened shape of the pipe ends. The securing means is a welding bead which is capable of being placed completely around each pipe end even though the greater lengths of the pipes are juxtaposed to approximate a panel coil and thereby avoid collecting labels and foreign material brought into the washing solution on or in the bottles.

The advantages of the embodiment of this invention are that the pipes can be welded into the header face sheets to form a fluid tight joint, the flattened ends of the pipes provide for drainage of the fluid out of the pipes into the headers, and the shape of the exit of the coil facilitates the drainage of condensate so that water hammer is avoided and improved heat exchange is obtained.

BRIEF DESCRIPTION OF THE DRAWINGS

The heat transfer coil of this invention is shown in a preferred embodiment on the following drawings which form a part of this specification, and in which:

FIG. **1** is a side elevational view of a preferred embodiment of the heat transfer coil;

FIG. **2** is a sectional view taken along the line **2—2** of FIG. **1**;

FIG. **3** is an end view partly in section of the heat transfer coil taken along the line **3—3** in FIG. **1**; and

FIG. **4** is a fragmentary and enlarged view of a typical pipe of the heat transfer coil.

DETAILED DESCRIPTION OF THE HEAT TRANSFER COIL

The preferred embodiment of the heat transfer coil, as seen in FIG. **1** and the other views of the drawings, includes one end header **10** which provides a hollow interior chamber **11.** One wall of the chamber **11** is constituted by a face sheet **12** in which there is formed a series of oblong slots to receive the end portions **13** of a plurality of pipes **14.** The uppermost pipe **14A** is somewhat smaller than the pipes therebelow and forms the connection for a plurality of coil supports **15.** The lowermost pipe **14B** is provided with a plurality of tie bars **16** which also provide support. As seen in FIG. **1** the righthand end of the pipes **14** and **14A** are connected to a second header **17** which is formed with a chamber **18** and one wall of the chamber is a face sheet **19** formed with a series of oblong slots to receive the ends of the pipes **14.** The uppermost pipe **14A** is circular in section and therefore the connection of its end portions in the respective face sheets **12** and **19** is through a circular opening. The header **17** is provided with a heat transfer fluid inlet pipe **20** which opens into the upper end portions of the header **17** so as to direct the heat transfer fluid into all of the pipes and to the opposite header **10.** There is an outlet pipe **21** of circular opening in the lower end of the face sheet **19,** and its inner end **22** is connected in fluid tight relation to an outlet adaptor **23** which is suitably shaped to form the intermediate connection between the end **24** of the larger circular pipe **14B** and the end **22** of the smaller pipe **21.**

It is particularly shown in FIGS. **2, 3,** and **4** that each of the pipes **14,** and one end of the pipe **14B** is circular throughout the greater portion of its length and at the respective ends these pipes are suitably shaped to form oblong ends **13** in which two opposite walls **13A** are flattened so as to expand the pipe (FIG. **4**) in one direction into a major dimension D which is perpendicular to the minor dimension as measured across the flattened portions **13A.** It has been previously explained that the respective face sheets **12** and **19** are each formed with oblong slots **25** so as to provide an opening of substantially the same shape as the end portions of the pipes **14** and **14B.** The result of shaping the end portions of the pipes is to assure the pipe end portions having a matching fit with the oblong slots of the face sheets. The attainment of the matching fit allows weld material **26** to be used to form fluid tight connections of the pipes to the slots **25** in the face sheets.

One of the important characteristics of the heat transfer coil is to arrange the components thereof so as to closely approximate a panel coil, thereby eliminating spaces between the respective pipes and avoiding the

possibility of having labels and similar material collect between the pipes **14**. Accordingly the coil assembly is arranged by having the major dimension of the oblong slots in the face sheets **12** and **19** turned to an angle A relative to the vertical stack of pipes **14** (see FIG. **3**). The preferred angle from the vertical may be between **50** and **55** degrees, and when this angular arrangement is followed certain advantages accrue. For example, the major length of the pipes **14** can be brought to abutment or nearly in abutment so as to gain the advantage of a panel coil. In addition, with the flattened oblong ends **13** of the respective pipes **14** turned so as to fit into the oblong slots **25**, it is possible to obtain a complete water tight weld **26** around each pipe end portion and the adjacent face sheet. Without shaping the pipe end portions as described it would be impossible to effectively obtain a water tight weld completely around each individual pipe. There is another advantage to obtained from the similar orientation of the oblong pipe ends and the face sheet slots and that is that the oblong shape and the angular orientation of the pipes allow the drainage of condensate into the respective headers at the internal sloped portion **27** (FIG. **3**) so that substantially all of the condensate can be drained from the coil, except the possibility of some condensate collecting at the bottom space **18A** of the header chamber **18**.

Heat transfer coils normally used in bottle washers must have a design to permit installation in very limited spaces, so that compactness is important. The heat transfer coils are located in compartments of a bottle washer to raise the temperature of the caustic washing solution and therefore are subject to fouling from paper labels, pulp, scale, and broken glass. Hence, it is critical to the coil configuration that it should present a smooth heat transfer surface so as to minimize fouling which reduces the effectiveness of heat transfer and allows easier cleaning merely by washing with a stream of water from a hose.

It has been found that embossed panel coils have an extremely short service life because of caustic embrittlement which causes pin holes to develop along the lines where the panel sheets have been embossed in order to form the internal fluid passages. One solution to the short life experience uses panel coils has been to stress relieve the embossed panels and to use heavier gauged material. Both of these solutions add to the cost and such costs are considered to be excessive. The heat transfer coil of the present invention is considerably less expensive than applying the solutions to the continued use of panel coils, and all of the advantages present in panel coils can be retained along with the advantages that have been enumerated above. It is also possible with the embodiment of the heat transfer coil herein described to effect field repair if a pipe should develop a leak. All that is required is to remove the weld **26** at the ends of the leaking pipe and to insert a replacement pipe and reweld the end portions. It should be pointed out that the free drain provided by the shaping of the end portions of the pipes **14** avoids the collection of condensate which causes destructive water hammer and also reduces heat transfer.

It is believed that the foregoing detailed description has indicated the uniqueness of the construction, and the advantages set forth are believed to be readily understood.

What is claimed is:

1. In a heated fluid carrying coil construction for container washers using caustic washing solution in which the coil is emersed to heat the caustic solution, the improvement which consists in spaced elongated headers each having a face sheet formed with a plurality of oblong apertures having the major dimensions thereof oriented at substantially the same angle of 50° to 55° to the elongation of said header face sheets, fluid conducting pipes extending between said header face sheets, each pipe having a round body and fluid drain facilitating end portions flattened to an oblong shape for fitting into said face sheet oblong apertures, said angle of orientation of the oblong apertures placing said round bodies of said pipes in abutment throughout substantially the full length thereof between said end portions to block the free flow of the washing solution therebetween, and welding means applied around said flattened end portions of said pipes to secure said end portions into said face sheets and form a fluid seal bead around the periphery of each oblong end portion, means to supply a heated fluid into one pipe for flooding said pipes and headers, and means connected to one header to discharge the heating fluid.

* * * * *