(12) INTERNATIONAL APPLICATION PUBLISHED UNDER THE PATENT COOPERATION TREATY (PCT)

(19) World Intellectual Property Organization
International Bureau

(43) International Publication Date
02 September 2021 (02.09.2021)

WIPO | PCT

(10) International Publication Number
WO 2021/174143 A1

(51) International Patent Classification:
A61M 5/19 (2006.01) *A61M 5/315* (2006.01)
A61M 5/31 (2006.01) *A61M 5/32* (2006.01)

(21) International Application Number:
PCT/US2021/020123

(22) International Filing Date:
26 February 2021 (26.02.2021)

(25) Filing Language: English

(26) Publication Language: English

(30) Priority Data:
62/981,811 26 February 2020 (26.02.2020) US

(71) Applicant: **SOLUTION MEDICAL, LLC** [US/US]; 181 Front Street West Conshohocken, Conshohocken, PA 19428 (US).

(72) Inventors: **ANTHONY, Julia**; 320 East Manoa Road, Havertown, PA 19083 (US). **BOULIANE, Martin**; 711 Meadows Circle, Ridgway, CO 81432 (US). **KIEL, Jonathan**; 239 Charry Lane, Havertown, PA 19083 (US). **NUMANN, Alexander**; 2025 Washington Avenue, Philadelphia, PA 19146 (US). **AVERY, Mikael**; 238 Harvard Avenue, Collingwood, NJ 08108 (US). **HASKARD, Kirrily**; 204/118 Old Canterbury Rd, Lewisham, Nsw, 2049 (AU). **MASON, William**; 701-703, Parramatta Rd., Leichhardt, 2040 (AU).

(74) Agent: **ZURAWSKI, John, A.**; Ballard Spahr LLP, 1735 Market Street, 51st Floor, Philadelpha, PA 19103 (US).

(81) Designated States *(unless otherwise indicated, for every kind of national protection available)*: AE, AG, AL, AM, AO, AT, AU, AZ, BA, BB, BG, BH, BN, BR, BW, BY, BZ, CA, CH, CL, CN, CO, CR, CU, CZ, DE, DJ, DK, DM, DO, DZ, EC, EE, EG, ES, FI, GB, GD, GE, GH, GM, GT, HN, HR, HU, ID, IL, IN, IR, IS, IT, JO, JP, KE, KG, KH, KN, KP, KR, KW, KZ, LA, LC, LK, LR, LS, LU, LY, MA, MD, ME, MG, MK, MN, MW, MX, MY, MZ, NA, NG, NI, NO, NZ, OM, PA, PE, PG, PH, PL, PT, QA, RO, RS, RU, RW, SA, SC, SD, SE, SG, SK, SL, ST, SV, SY, TH, TJ, TM, TN, TR, TT, TZ, UA, UG, US, UZ, VC, VN, WS, ZA, ZM, ZW.

(84) Designated States *(unless otherwise indicated, for every kind of regional protection available)*: ARIPO (BW, GH, GM, KE, LR, LS, MW, MZ, NA, RW, SD, SL, ST, SZ, TZ, UG, ZM, ZW), Eurasian (AM, AZ, BY, KG, KZ, RU, TJ, TM), European (AL, AT, BE, BG, CH, CY, CZ, DE, DK, EE, ES, FI, FR, GB, GR, HR, HU, IE, IS, IT, LT, LU, LV, MC, MK, MT, NL, NO, PL, PT, RO, RS, SE, SI, SK, SM, TR), OAPI (BF, BJ, CF, CG, CI, CM, GA, GN, GQ, GW, KM, ML, MR, NE, SN, TD, TG).

Published:
— *with international search report (Art. 21(3))*

(54) Title: DRUG INJECTION APPARATUS, SYSTEMS AND METHODS

FIG. 1A

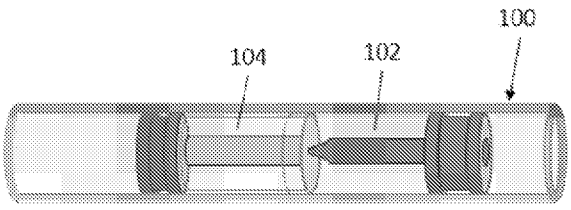

(57) Abstract: The disclosure relates to systems, methods and apparatus of storing, transporting, mixing, and injecting a drug as a solution, and in some embodiments, to a drug injection apparatus and system intended for use in mixing on demand a drug with a liquid, such as water, in a premeasured quantity and dosage, and injecting the drug mixture using an integrated hypodermic needle assembly. Also provided are methods of using such apparatus and systems.

WO 2021/174143 A1

DRUG INJECTION APPARATUS, SYSTEMS AND METHODS

CROSS REFERENCE TO RELATED APPLICATION

[0001] This application claims priority to U.S. Provisional Application No. 62/981,811 filed on February 26, 2020, which is incorporated by reference herein in its entirety.

FIELD OF THE INVENTION

[0002] The disclosure relates to a device comprising a needle for administration of an active agent into a subject, where the active agent in a solid or liquid form of an active agent in one compartment separated from a diluent or pharmaceutically acceptable carrier in another compartment, the device capable of exposing the active agent to the diluent or pharmaceutically acceptable carrier for mixing or dissolution prior to administration. The disclosure also relates to systems, methods and apparatus of storing, transporting, mixing, and injecting a drug as a solution, and in some embodiments, to a drug injection apparatus and system intended for use in mixing on demand a drug with a liquid, such as water, in a premeasured quantity and dosage, and injecting the drug mixture using an integrated hypodermic needle assembly. Also provided are methods of using such apparatus and systems.

BACKGROUND

[0003] Emergency injections have long been utilized in response to any number of forms of extremely time-sensitive, life-threatening events including overdose, anaphylaxis, angioedema or adrenal insufficiency (AI). The immediate need and essential nature of the active ingredients necessitate both accurate and rapid drug delivery. In fact, while naloxone auto-injectors (Evzio®) and epinephrine-containing auto-injectors (Epi-pen® and Auvi-Q®) offer a more easily manipulated and administered dosing system, steroid injectors (Solu-Cortef® and Solu-Medrol®), due to their reliance upon reconstitution, while equally imperative, continue to suffer from cumbersome delivery systems that provide sub-optimal administration devices in terms of drug preparation and delivery.

[0004] To this point, steroid emergency injections, namely hydrocortisone, remains the drug of choice in adrenal insufficiency marked by conditions where the adrenal glands express an inability to produce adequate amounts of the glucocorticoid cortisol. Cortisol itself is released in response to both stress and hypoglycemia wherein this essential steroid is responsible for the production of glucose and for immunosuppression as well as, among other

processes, glycogenesis, electrolyte balances, gastric acid secretion and can affect sleep, mood and stress levels. Conversely, a decrease in (or absence of) cortisol can result in weakness, fatigue, weight loss and depression while the complete absence of cortisol can precipitate adrenal shock or adrenal crisis, wherein the body lacks the ability to maintain homeostatic function, and an individual can exhibit severe lethargy, confusion, psychosis, cramping, diarrhea, vomiting, cramping, low blood sugar and other life threating sequelae up to and including death.

[0005] Up to now, patients living with Congenital Adrenal Hyperplasia (CAH), Addison's disease, and idiopathic adrenal insufficiency face challenges in the administration of their medication. Conventionally, to prepare hydrocortisone for intramuscular (IM) administration, the individual either injects bacteriostatic water or bacteriostatic sodium chloride into a sterile vial containing dry hydrocortisone powder or utilizes an Act-o-Vial® system, where the diluent in an upper vial is connectively attached to a lower vial containing active dry hydrocortisone ingredient. Both require arduous manipulation of disparate or conjoined vials, alike, for mixing, withdrawal and administration of the reconstituted mixture all within a life-critical, exceedingly short time period. Even in the case of the relatively simpler Act-o-vial® drug mixing system, it requires an average of twelve user steps for injection, including (1) retrieve a needle and diluent/drug container, (2) depress the plastic cover above the diluent containing vial downward (releasing the diluent into the dry ingredient containing vial below), (3) mix the dry powder and solution, (4) remove the plastic cover, (5) sterilize the needle receiving stopper, (6) insert the needle through the stopper center, (7) withdraw the dose and, finally, (8) inject the appropriate dose intramuscularly. Because of the complexity of the system, the Act-o-vial® delivery system requires a trained medical personnel to ensure proper retrieval and administration of a potentially life-saving drug. The Act-o-vial® delivery system is not designed to be utilized by a layperson or an individual living with adrenal insufficiency.

SUMMARY OF THE EMBODIMENTS

[0006] The disclosure relates to systems, methods and apparatus involving transportation, storage, mixture, and injection of a drug to a patient, such as involving administration to the patient of a single dose of the drug transported, stored, mixed and injected using a drug injection device.

[0007] Steroid emergency injections, namely hydrocortisone, remains the drug of choice in adrenal insufficiency marked by conditions where the adrenal glands express an inability to

produce adequate amounts of the glucocorticoid cortisol. A decrease in, or absence of, cortisol can result in numerous conditions, including weakness, fatigue, weight loss and depression, while the complete absence of cortisol can precipitate adrenal shock or adrenal crisis, which may be life threating. It is against this backdrop that the importance of immediate administration of exogenous cortisol (i.e., hydrocortisone) becomes imperative and mandatory. To date, hydrocortisone is available to inpatient recipients via intravenous injection, by intravenous infusion, or by intramuscular (IM) injection, but available only practically to outpatient recipients for acute short-term conditions through a prepared reconstitutable intramuscular injection from doses typically between 100 mg to 500 mg.

[0008] Intending to address the shortcomings of the prior art devices, the disclosure focuses on creating more patient-friendly and effective drug delivery systems. The disclosure aims to improve the administration efficacy of lifesaving injectable medication with twist-to-mix delivery systems and devices to benefit millions people worldwide living with Congenital Adrenal Hyperplasia (CAH), Addison's disease, and idiopathic adrenal insufficiency. Exemplary embodiments of the disclosed systems and devices require as few as four steps for injection and can be designed for people experiencing an adrenal crisis and their caregivers.

[0009] The present disclosure is directed to remedy primarily the inadequacies in the area of emergency injectable steroids. The disclosure is also directed to further advance the efficient and effective administration of other emergency medications (e.g., epinephrine and naloxone) and non-emergency medications including, but not limited to non-emergency steroids, antibiotics, analgesics, disease specific treatments (e.g., MS treatments, psoriasis treatments), insulins, glycoproteins, immunomodulators, G-CSFs, erythropoietin (Epogen®, Procrit®), biologics, antihypertensives, vaccines, hormones (including birth control), anti-hormones, sedatives, antiepileptics, anti-neoplastics, insecticidal agents (e.g., dobutrex), anti-psychotics, detoxing agents, cosmetics, selective serotonin reuptake inhibitors (SSRIs), proton-pump inhibitors (PPIs), anesthetics, diuretics, anti-diuretics, blood thinners (e.g., low molecular heparin), streptokinase, and the like, alone or in combination, whether in a liquid form, reconstitutable form or otherwise. In some embodiments, the systems and devices of the disclosure are used to deliver medications historically using the Act-o-vial® system, namely Methylprednisolone for Multiple Sclerosis, certain cancers, and autoimmune conditions. In some embodiments, the systems and devices of the disclosure are used to deliver Glucagon used in hypoglycemic emergencies. In some embodiments, the systems and devices of the disclosure are used to deliver Ticarcillin used to treat high morbidity infections. In some

embodiments, the systems and devices of the disclosure are used to deliver Chlordiazepoxide used to treat alcohol withdrawal symptoms. In some embodiments, the systems and devices of the disclosure are used to deliver Desoxycorticosterone pivalate used in veterinary emergencies. In some embodiments, the systems and devices of the disclosure are used for in-vitro fertilization treatments.

[0010] As described below, embodiments of the present disclosure include the use of a medication transportation and storage container, a drug mixing system, and a drug injection assembly, using apparatus, assemblies, systems and methods different from those of the prior art.

[0011] While the disclosure sets forth the best mode or modes contemplated of carrying out the various embodiments disclosed herein to enable a person skilled in the art to practice the present disclosure, the preferred embodiments are, however, not intended to be limiting, but, on the contrary, are included in a non-limiting sense apt to alterations and modifications within the scope and spirit of the disclosure and appended claims.

[0012] In accordance with an aspect of the disclosure, an apparatus is disclosed for transportation, storage, mixture, and injection of a drug to a patient, wherein the apparatus comprises: a transportation assembly, a storage assembly, a mixture assembly, and an injection assembly. The transportation assembly is adapted to provide a convenient mode of transporting the drug prior to administration of the drug to the patient. The storage assembly is adapted to properly store the drug and mixing ingredients within the transportation assembly prior to mixing the drug and mixing ingredients to create a drug-in-solution just before injecting the mixture into the patient. The mixture assembly is adapted to properly mix the drug and mixing ingredients to create the drug-in-solution within the transportation assembly in preparation of injecting the mixture into the patient. The injection assembly is adapted to properly inject the drug-in-solution into the patient once the mixture is created.

[0013] In accordance with an aspect of the disclosure, a method is disclosed for using the apparatus disclosed herein for transportation, storage, mixture, and injection of a drug to a patient, wherein the apparatus comprises: a transportation assembly, a storage assembly, a mixture assembly, and an injection assembly, and wherein the method comprises providing the apparatus, engaging the mixture assembly to mix the drug and create a drug-in-solution in preparation to administer the drug to the patient, and engaging the injection assembly to inject the drug-in-solution into the patient. In some embodiments, the method further comprises

disengaging a safety device prior to engaging the injection assembly to inject the drug-in-solution into the patient.

[0014] In accordance with an aspect of the disclosure, a method is disclosed for assembling an apparatus for transportation, storage, mixture, and injection of a drug to a patient, wherein the apparatus comprises: a transportation assembly, a storage assembly, a mixture assembly, and an injection assembly, and wherein the method comprises: providing and assembling the transportation assembly; providing and assembling the storage assembly, providing and assembling the mixture assembly, and providing and assembling the injection assembly.

[0015] In accordance with an aspect of the disclosure, a system is disclosed for assembling an apparatus for transportation, storage, mixture, and injection of a drug to a patient, wherein the apparatus comprises: a transportation assembly, a storage assembly, a mixture assembly, and an injection assembly, and wherein the system comprises: means for assembling the transportation assembly; means for assembling the storage assembly, means for assembling the mixture assembly, and means for assembling the injection assembly.

[0016] The disclosure accordingly provides a device comprising: (a) a first compartment and a second compartment, each of the first and second compartments defining a first and second cavity, respectively, separated by and in fluid communication with a first opening; (b) a needle assembly; and (c) an insertion rod positioned in the first compartment operably connected to a movable element, wherein the first opening is covered by a seal. In some embodiments, the insertion rod of the disclosed device comprises two oppositely directed faces, the first face physically in contact with the movable element and the second face positioned within the first cavity; wherein the second face comprises a protrusion and at least one valve distally positioned from the protrusion. In some embodiments, the protrusion in the second face of the insertion rod has a beveled surface. In some embodiments, the movable element of the disclosed device is physically positioned adjacent to the insertion rod, and the insertion rod is movable upon depression of the movable element toward a direction along a longitudinal axis parallel to and within the first compartment and second compartments.

[0017] In some embodiments, the second compartment of the disclosed device comprises an active agent and the first compartment of the disclosed device comprises a pharmaceutically acceptable carrier. In some embodiments, the second compartment comprises a pharmaceutically acceptable carrier and the first compartment comprises an active agent. In some embodiments, both the first compartment and the second compartment each comprises

one or a plurality of active agents. In some embodiments, both the first compartment and the second compartment each comprises: one or a plurality of active agents and one or a plurality of pharmaceutically acceptable carriers. In some embodiments, the second compartment comprises an active agent in solid or semisolid form and the first compartment comprises a pharmaceutically acceptable carrier in liquid form. In some embodiments, the second compartment comprises an active agent in liquid form and the first compartment comprises a pharmaceutically acceptable carrier in liquid form. In some embodiments, the active agent comprised in the disclosed device is lyophilized.

[0018] In some embodiments, the disclosed device further comprises a third compartment defining a third cavity adjacent to and separated from the second compartment by a second opening covered by a second seal. In some embodiments, the second seal is a movable plug in operable connection to the movable element and, whereupon depression of the movable element, allows for displacement of the movable plug and fluid communication between the second and third compartments. In some embodiments, depression of the movable element allows for displacement of the movable plug, insertion rod and fluid communication between the second and third compartments.

[0019] In some embodiments, the third compartment of the disclosed device comprises the needle assembly; the needle assembly comprising a spring and a needle in operable connection to the spring; wherein the needle comprises a first fluid opening within the third cavity and an oppositely facing second fluid opening positioned away from the first and second cavities. In some embodiments, the first and second fluid openings are covered by a movable seal in operable connection to the movable element, such that depression of the movable element to the first and second predetermined positions causes displacement of the first and second seals respectively.

[0020] In some embodiments, the disclosed device is in a first operable condition and comprises a first, second and third compartment, the first and second compartments in fluid communication with each other by a first opening comprising a first seal; the second and third compartments in fluid communication with each other by a second opening covered by a second seal; wherein the second compartment is positioned between the first and third compartments on opposite facing sides of the second compartment; wherein the movable element is a fully extended position relative to the lateral orientation of the device, wherein the first compartment comprises a pharmaceutically acceptable carrier, the second compartment comprises one or a plurality of active agents, the third compartment comprises needle

assembly, and wherein the first and second seals covering each of the first and second openings are fully intact preventing fluid flow from one compartment to another compartment. In some embodiments, the disclosed device is in a second operable condition and comprises a first, second and third compartment, the first and second compartments in fluid communication with each other by a first opening; the second and third compartments in fluid communication with each other by a second opening covered by a second seal; wherein the second compartment is positioned between the first and third compartments on opposite facing sides of the second compartment; wherein the movable element is in a partially depressed position relative to the lateral orientation of the device, wherein the first and second compartments comprises a pharmaceutically acceptable carrier and one or a plurality of active agents; wherein the third compartment comprises needle assembly, and wherein the second seal covers the second opening preventing fluid flow from the third compartment into the first or second compartments. In some embodiments, the disclosed device is in a third operable condition and comprises a first, second and third compartment, the first, second and third compartments are in fluid communication with each other; wherein the second compartment is positioned between the first and third compartments on opposite facing sides of the second compartment; wherein the movable element is in a partially depressed position relative to the lateral orientation of the device such that the insertion rod has punctured the second seal, wherein the first, second and third compartments comprise a pharmaceutically acceptable carrier and one or a plurality of active agents; wherein the third compartment comprises the needle assembly, and wherein the second seal has been punctured or disposed from its position over the second opening and the needle assembly is exposed to the active agent and pharmaceutically acceptable carrier. In some embodiments, the disclosed device is in a fourth operable condition and comprises a first, second and third compartment, the first, second and third compartments are in fluid communication with each other; wherein the second compartment is positioned between the first and third compartments on opposite facing sides of the second compartment; wherein the movable element is in a fully depressed position relative to the lateral orientation of the device and the needle of the needle assembly is exposed. In some embodiments where the disclosed device is in the second, third, or fourth position, the active agent comprised in the disclosed device is dissolved in one or a plurality of pharmaceutically acceptable carriers.

[0021] In some embodiments, the active agent comprised in any of the disclosed device is chosen from any one or combination of active agents from Table 1. In some embodiments, the active agent is chosen from any one or combination of active agents from Table 1 in a dosage

identified in Table 1. In some embodiments, the active agent is a cortisone or cortisone derivative thereof. In some embodiments, the cortisone derivative is hydrocortisone sodium succinate wherein the derivative is in a dosage of from about 50 mg to about 250 mg in weight or from about 25 mg/mL to about 150 mg/mL in a weight to volume solution of active agent in pharmaceutically acceptable carrier.

[0022] In some embodiments, the first or the second compartment of the disclosed device comprises a pharmaceutically acceptable carrier in fluid form with a viscosity of from about 1 cP to about 150 cP.

[0023] In some embodiments, the disclosure provides a method of treating and/or preventing a disease or disorder in a subject in need thereof comprising administering one or a plurality of active agents into the subject by any of the devices disclosed herein. In some embodiments, the disclosure provides a method of treating a subject in need of administration of one or a plurality of active agents comprising administering a pharmaceutically effective amount of the one or plurality of active agents by any of the devices disclosed herein. In some embodiments, the disclosure provides a method of treating cortisol depletion in a subject in need thereof comprising administering to the subject a cortisone or cortisone derivative thereof through any of the devices disclosed herein. In some embodiments, the cortisol depletion in the subject is caused by Addison's disease, Congenital adrenal hyperplasia, Autoimmune adrenalitis, Adrenalectomy, Adrenomyeloneuropathy, Adrenoleukodystrophy, Adrenal Tumors, Schmidt Syndrome, Hyperaldosteronism, Pituitary Tumors, Pituitary Cysts, and/or Critical-illness Related Corticosteroid Insufficiency. In some embodiments, the disclosure provides a method of treating a cortisol disorder in a subject in need thereof comprising administering to the subject a cortisol or cortisol derivative by use of any of the devices disclosed herein. In some embodiments, the step of administering in any of the disclosed methods of treatment comprises: depressing the movable element of the disclosed device to a first predetermined position, a second predetermined position and a third predetermined position; wherein the device comprises: a first compartment, a second compartment and a third compartment, each of the first, second and third compartments defining a first, second and third cavity, respectively; the first and second compartments separated by and in fluid communication with a first opening, and the second and third compartments separated by and in fluid communication with a second opening; wherein each of the first opening is covered by a first seal and the second opening is covered by a second seal; wherein the third compartment comprises a needle assembly comprising a spring and a needle in operable connection to the

spring; wherein depressing the movable element to the first predetermined position causes the insertion rod to displace the first seal from the first opening and expose the first opening between the first and second compartment resulting in fluid communication between the first and second compartments; and wherein depressing the movable element to the second predetermined position causes the insertion rod to displace the second seal from the second opening and expose the second opening between the second and third compartment resulting in fluid communication between the second and third compartments; and wherein depressing the movable element to a third predetermined position causes ejection of the contents of the third compartment through the needle assembly. In some embodiments, the disclosed method further comprises a step of unlocking the needle assembly prior to depressing the movable element to the third predetermined position.

[0024] In some embodiments, the disclosure provides a method of treating congenital adrenal hyperplasia or Addison's disease in a subject in need thereof comprising administering to the subject a cortisone or cortisone derivative thereof through any of the devices disclosed herein.

[0025] The disclosure further provides a method of manufacturing any of the devices disclosed herein comprising positioning the active agent or agents in a sterile or aseptic environment. In some embodiments, the method further comprises weighing the active agent or agents. In some embodiments, the method further comprises affixing the first and second compartments. In some embodiments, the method comprises attaching the first and second compartments in a sterilized environment by compression or screw into a fastener.

[0026] The disclosure also provides a method of administering an active agent to a subject in need thereof through any of the devices disclosed herein comprising: (a) depressing the movable element to a first predetermined position; and (b) depressing the movable element to a second predetermined position; wherein the first predetermined position creates displacement sufficient for the insertion rod to puncture the first seal, such that the first and second compartments are in fluid communication; and wherein the second predetermined position creates a displacement sufficient to displace the movable seal, thereby allowing fluid communication between the second and third compartments. In some embodiments, the second predetermined position creates a displacement sufficient to load the spring in the third compartment with a force from about 0 to about 100 Newtons.

[0027] The disclosure additionally provides a device comprising: (a) a first compartment, a second compartment, and a third compartment, each of the first, second and third

compartments defines a first, second and third cavity, respectively, and the second compartment is adjacently positioned between the first and third compartments; (b) a needle guard assembly operably functional within and at least partially housed in the third cavity and comprising a needle operably attached to a spring; and (c) an insertion rod positioned in the first compartment operably connected to a movable element, the insertion rod and movable element movable along a longitudinal axis of the first, second and third compartments; wherein the first and second compartments are in fluid communication through a first opening; wherein the second and third compartments are in fluid communication through a second opening; the first opening covered by a first seal and the second opening covered by a second seal. In some embodiments, the first compartment comprises one or a plurality of active agents; and the second compartment comprises one or a plurality of pharmaceutically acceptable carriers. In some embodiments, the first compartment comprises one or a plurality of pharmaceutically acceptable carriers; and the second compartment comprises one or a plurality of active agents. In some embodiments, the first, second and third compartments are cylindrically aligned along the longitudinal axis of the cavities. In some embodiments, the needle guard assembly of the device comprises a spring, a needle sheath, and an interior surface comprising one or a plurality of track elements in operable connection to the needle, such track elements capable of guiding movement of the needle through the needle sheath after movement of the spring.

BRIEF DESCRIPTION OF THE DRAWINGS

[0028] By reference to the appended drawings, which illustrate exemplary embodiments of the disclosure, the detailed description provided below explains in detail various features, advantages and aspects of this disclosure. As such, features of this disclosure can be more clearly understood from the following detailed description considered in conjunction with the following drawings, in which the same reference numerals denote the same, similar or comparable elements throughout. The exemplary embodiments illustrated in the drawings are not necessarily to scale or to shape and are not to be considered limiting of its scope, for the disclosure may admit to other equally effective embodiments having differing combinations of features, as set forth in the accompanying claims.

[0029] **FIG. 1A** shows a side cross sectional view of one embodiment of the device disclosed herein. **100**: Three chambered system allowing for the containment and mixing of one or more solid or liquid materials. **102**: First chamber that contains a liquid or solid material,

which is separated from a second chamber **104** by a barrier. **104**: Second chamber that contains a liquid, or solid material. This chamber is separated from chamber **102** by a barrier.

[0030] **FIG. 1B** shows a side cross sectional view of the device of **FIG. 1A** in which the materials contained in each chamber are combined through the action of a compression mechanism. **116**: Three chambered system allowing for the containment and mixing of one or more solid or liquid materials. **112**: First chamber that contains a liquid or solid material, which is separated from a second chamber **110** by a barrier. **110**: Second chamber that contains a liquid, solid, semisolid or gaseous material. This chamber is separated from chamber **112** by a barrier. **114**: A compression system, such as a plunger, spring, screw system, or a combination of two or more of these systems, to activate mixing between chambers **112** and **110**.

[0031] **FIG. 2A** shows a side cross sectional view of another embodiment of the device disclosed herein, which further comprises moveable components, chamber barriers, seals, and other components associated with an auto-injector. **200**: Three chambered system including a housing, plunger, mechanisms separating the three chambers, a compression system to activate combination of materials held in the first two chambers and move the materials into the third chamber. **202**: An activation system to begin the combination of materials held in chambers **214** and **208** and move the materials into chamber **210**. **204**: An insertion rod that penetrates barrier **206** and allows material transfer between chambers **216** and **208**. The insertion rod will push into chamber **208** to aid in pushing the liquid from **216** into **208**. Insertion rod **204** is likely comprised of or surrounded by sealant material to prevent fluid flow going behind the insertion rod. **206**: Barrier between chambers **216** and **208** that prevents material transfer between the two chambers until the barrier is penetrated by insertion rod **204**. **208**: Second chamber that houses liquid, solid, semisolid or gaseous material to be combined with the material held in chamber **216** after penetration of seal **206**. **210**: Third device chamber where materials from chamber **208** and **216** are combined after activation of the device. **212**: Spring that compresses upon material transfer into chamber **210** after penetration of barrier **206** and material combination occurs. **214**: Moveable seal assembly that moves through chamber **210** upon combination of the materials in chambers **208** and **216**. Seal **214** compresses spring **212** upon moving inward into chamber **210**. **216**: First chamber in device. Chamber could contain liquid or solid material that is to be combined with material in chamber **208** after insertion rod **204** penetrates barrier **206**. **218**: Housing that contains the three chambered system of **216**, **208**, and **210**, and activation system **202**.

[0032] **FIG. 2B** shows a side cross sectional view of another embodiment of the device disclosed herein where the insertion rod that breaks the seal (**220**, **254**) is two components instead of one. **220**: Another embodiment of the three chambered system for mixing two materials. **222**: An activation system to begin the combination of materials held in chambers **254** and **234** and move the materials into chamber **210**. **224**: Insertion rod assembly that penetrates barrier **232** to allow materials in chamber **254** and **234** to be combined. **226**: Seal component to prevent fluid from moving backwards through device. **228**: Fluid vent to allow fluid transfer between chambers **254** and **234**. **230**: Fluid path through insertion rod **224** to allow fluid transfer between chambers **254** and **234**. **232**: Barrier between chambers **254** and **234** that prevents material transfer between the two chambers until the barrier is penetrated by insertion rod **224**. **234**: Second chamber that houses liquid or solid material to be combined with the material held in chamber **254** after penetration of seal **232**. **236**: Housing for chamber **234**. Housing may be encased on the sides or the ends by material transfer barriers. **238**: Slidable seal for moveable assembly **246**. This seal prevents fluid from passing around its edges. **240**: Third device chamber where materials from chamber **254** and **234** are combined after device activation. **242**: Needle for injection of combined materials. **244**: Spring that compresses upon filling of chamber **240** and subsequent movement of assembly **246** through chamber **240**. **246**: Seal assembly that acts as a barrier for chamber **234** prior to device activation. After activation, the seal is a wall for chamber **240**, and then it is the compression mechanism to drive the combined materials out of the device. **248**: Seal that prevents material entry into syringe **242** until the seal is penetrated by the movement of assembly **246** upon device activation. **250**: seal material on chamber **236**. **252**: Entry point of insertion rod into chamber **234**. **254**: First chamber containing material to be combined with material in chamber **234**. **256**: Housing containing mixing chambers, materials, and all device assemblies. **258**: external housing for insertion rod **224** which allows the rod to move internally and may contain seals. **260**: Insertion rod assembly. **262**: Needle guide and spring attachment.

[0033] **FIG. 3A** shows a side cross sectional view of another embodiment of the device disclosed herein with a needle assembly having a needle guard **302** attached to the main device **300**. **300**: Device assembly for mixing two materials. **302**: Needle assembly and needle guard for injection of two combined material. A more detailed view of the needle assembly and needle guard of this embodiment is shown in **FIG. 3B**. **304**: Needle guard assembly that prevents fluid leaving the device and inhibits accidental injections. In this condition the guard is extended over the needle. **306**: Needle guard housing that conceals

needle **308** and retracts to allow for injection. **308**: Injection needle. **310**: Safety clip that prevents the needle guard from being activated prior to removal. **312**: Compression spring that holds needle guard **306** in place and pushes guard **306** back over needle once injection is complete. **314**: seal that prevents fluid entry into needle **308**. **FIG. 3C** shows a condition in which the device of **FIG. 3A** is activated and the components are combined, but injection is yet begun. **316**: Needle guard assembly that prevents fluid leaving the device and inhibits accidental injections. In this condition the guard housing is retracted to allow for injection. **318**: Injection needle. **320**: Needle guard housing that conceals needle **318** and retracts to allow for injection. **322**: seal that prevents fluid entry into needle **318**. A more detailed view of the needle assembly and needle guard is shown in **FIG. 3D**. **323**: Needle guard assembly that prevents fluid leaving the device and inhibits accidental injections. In this condition the guard is extended over the needle. **324**: Needle guard housing that conceals needle **342** and retracts to allow for injection. **326**: Guide tracks to allow for needle guard to slide into place using guard guides **328**. **328**: Needle guard guides for guide tracks **326**. **330**: Needle stabilizer and attachment. **338**: Safety clip that prevents needle guard housing **324** from retracting prior to intended use. **340**: connection between needle guard assembly and injection device. **342**: Injection needle. **344**: Compression spring to push needle guard into place around needle. **346**: Seal that prevents liquid entering or leaving the needle prior to injection. **FIG. 3E** shows another embodiment of the needle assembly and needle guard. **348**: Another embodiment of the needle guard assembly that prevents fluid leaving the device and inhibits accidental injections. In this condition the guard is extended over the needle. **350**: Needle guard housing that conceals a needle and retracts to allow for injection. **352**: device housing, which also acts as a needle guard guide. **354**: Needle exit that can contain a seal to prevent fluid entering or leaving the injection needle.

[0034] **FIG. 4** shows a side cross sectional view of an embodiment with the device body, needle assembly and guard attached. **400**: Needle guard assembly that prevents fluid leaving the device and inhibits accidental injections. In this condition the guard is extended over the needle. **402**: Guide tracks to allow for needle guard to slide into place using guard guides **446**. **404**: Needle guard attachment point to main device. **406**: Needle stabilizer and attachment. **408**: Spring that compresses upon filling of chamber **444** and subsequent movement of assembly **410** through chamber **444**. **410**: Moveable seal assembly. **412**: Seal that prevents material entry into syringe **448**. **414**: Seal material on chamber **438**. **416**: Beveled entry point for insertion rod **428**. **418**: First device chamber. **420**: Main device housing. **422**: Fluid vent

to allow fluid transfer between chambers **418** and **436**. **424**: Embodiment of the three chambered system for mixing two materials with needle assembly and guard. In this embodiment the materials have not been mixed. **426**: An activation system to begin the combination of materials. **428**: Insertion rod. **430**: Seal around insertion rod. **434**: Breakable seal between chambers **418** and **436**. **436**: Second device chamber. **438**: Second chamber housing. **440**: Slidable seal for moveable assembly **246**. **442**: Safety clip that prevents the needle guard from being activated prior to removal. **444**: Third device chamber. **448**: Needle for injection. **450**: Seal that prevents fluid entry into needle **448**. **452**: Exit point for needle from needle guard.

[0035] **FIG. 5A** shows a side cross sectional view of a first operable condition of the device disclosed herein. **500**: First operable condition before the device has been activated. **502**: Needle guard housing extended around the needle. **504**: Combination chamber that is empty in this condition. **506**: Moveable seal assembly that is acting as a barrier between chamber **508** and **504**. **508**: Chamber **508** containing the material to be combined with material in chamber **510**. **510**: Chamber containing material to be combined with material in chamber **508**. **512**: Insertion rod to break barrier **516** and push material from chamber **510** into **508**. **514**: Activation assembly, which may be a plunger, screw system or some other type of method to compress the device and move the materials to be combined into chamber **504**. **516**: Barrier between chambers **510** and **508**. **518**: Safety clip that prevents needle guard 502 from retracting.

[0036] **FIG. 5B** shows a side cross sectional view of a second operable condition of the device disclosed herein. **542**: Partially inserted insertion rod into chamber **546**. **544**: Activation assembly, which may be a plunger, screw system or some other type of method to compress the device and move the materials to be combined. **546**: First device chamber. **548**: Broken seal allowing chambers **550** and **546** to be in fluid contact. **550**: Second device chamber.

[0037] **FIG. 5C** shows a side cross sectional view of a third operable condition of the device disclosed herein. **520**: Third operable condition in which the device has been activated, the materials are combined but not injected. **522**: Combination chamber containing material from first two chambers. **524**: Compression assembly that has been activated to allow for materials in first two chambers to be combined. **526**: Insertion rod has completely moved through the first chamber to push all material through the second chamber and into chamber **522**. **528**: Seal assembly that has moved from the input of material from the first two chambers

to create space in chamber **522** for the combined materials. **530**: Compression spring that is now loaded to inject the combined materials once the needle guard **532** is retracted. **532**: Needle guard in the unretracted position preventing the combined materials in chamber **522** from being removed from chamber **522** through the needle. **534**: Seal that prevents material in chamber **522** from being removed through the needle.

[0038] **FIG. 5D** shows a side cross sectional view of a forth operable condition of the device disclosed herein. **536**: Forth operable condition where the needle guard has been retracted and the combined materials have been forced out of the combination chamber. **538**: Needle guard that has been retracted to expose the needle and allow for combined liquids to be forced out of the device. **540**: Seal assembly has moved back into the device to force the combined liquids out of the device through the needle. **542**: Compression spring has moved back into the device to force the combined materials out of the device. **544**: Injection needle.

[0039] **FIG. 6** shows side cross sectional views of the three main operable conditions of the device disclosed herein plus the final state where the device is removed from the injection site. **600**: Operable condition prior to removal of the safety pin. The device has been activated and materials for injection are combined as indicated by the presence of the movable seal assembly near at the bottom of the third chamber. **602**: The safety pin has been removed and the device can now be depressed against a surface, such as a patient's skin, for injection. **604**: The device has been pushed onto a patient or other surface causing the needle guard to retract and the needle to enter the injection volume. The device is held into position until the injection is complete. **606**: After all liquid has been injected, the device is moved upwards causing the needle guard to extend and cover the needle again. Injection is complete as noted by the presence of the moveable seal assembly farther from the bottom of the device.

[0040] **FIG. 7** shows a side cross sectional view of the internal components of the second chamber **722** of one embodiment of the device disclosed herein and how it resides between the other two chambers **714** and **728**. **700**: Internal assembly of the second chamber and associated components. **702**: Compression spring that holds seal assembly **724** in position and allows for forcing combined materials out of device from chamber **728** during injection. **704**: Seal that prevents transfer of material from chamber **722** into **728** and prevents fluid entry into needle **726**. **706**: housing for chamber **722**. **708**: Entry point for insertion rod **714** into chamber **722**. **710**: Seal surrounding chamber **710** preventing fluid flow. **712**: Barrier preventing material transfer between chamber **714** and **722**. **714**: First chamber in device containing material to be combined with that in chamber **722**. **716**: Insertion rod to penetrate barrier **712** and force

material from **714** into **722**. **718**: Fluid path to allow fluid transfer between chamber **720** and **714**. **720**: Piercing point to allow for penetration of barrier **712**. **722**: Chamber containing material to be combined with material in **714**. **724**: Seal assembly that acts as a barrier between **728** and **722**, as well as pushes fluid out of the device when injection is occurring. **726**: Injection needle. **728**: Combination chamber where the combined materials from **714** and **722** wait to be injected.

[0041] **FIG. 8** shows a side cross sectional view of one embodiment of the device disclosed herein which uses a screw mechanism to drive a plunger downward. **800**: Another embodiment of the activation assembly where the device is twisted and a screw mechanism forces a plunger downward. This is the device prior to activation. **802**: The activation assembly after activation and the plunger is pushed downward forcing the combination of the two materials.

DETAILED DESCRIPTION OF THE EMBODIMENTS

[0042] The disclosure relates to systems, methods and apparatus for storing, transporting, mixing, and injecting a drug as a solution. The disclosed systems, methods and apparatus may be understood more readily by reference to the following detailed description of particular embodiments and the examples included therein and to the figures and their previous and following description.

[0043] It is to be understood that the terminology used herein is for the purpose of describing particular embodiments only, and is not intended to limit the scope of the present disclosure which will be limited only by the appended claims.

[0044] It must be noted that as used herein and in the appended claims, the singular forms "a", "an," and "the" include plural reference unless the context clearly dictates otherwise. Thus, for example, reference to "a nucleic acid sequence" includes a plurality of nucleotides that are formed, reference to "the nucleic acid sequence" is a reference to one or more nucleic acid sequences and equivalents thereof known to those skilled in the art, and so forth.

[0045] Ranges may be expressed herein as from "about" one particular value, and/or to "about" another particular value. When such a range is expressed, also specifically contemplated and considered disclosed is the range from the one particular value and/or to the other particular value unless the context specifically indicates otherwise. Similarly, when values are expressed as approximations, by use of the antecedent "about," it will be understood that the particular value forms another, specifically contemplated embodiment that should be

considered disclosed unless the context specifically indicates otherwise. It will be further understood that the endpoints of each of the ranges are significant both in relation to the other endpoint, and independently of the other endpoint unless the context specifically indicates otherwise. The term "about" as used herein when referring to a measurable value such as an amount, a temporal duration, and the like, is meant to encompass variations of ±20%, ±10%, ±5%, ±1%, ±0.5%, or ±0.1% from the specified value, as such variations are appropriate to perform the disclosed methods.

[0046] "Optional" or "optionally" means that the subsequently described event, circumstance, or material may or may not occur or be present, and that the description includes instances where the event, circumstance, or material occurs or is present and instances where it does not occur or is not present.

[0047] The phrase "and/or," as used herein in the specification and in the claims, should be understood to mean "either or both" of the elements so conjoined, i.e., elements that are conjunctively present in some cases and disjunctively present in other cases. Other elements may optionally be present other than the elements specifically identified by the "and/or" clause, whether related or unrelated to those elements specifically identified unless clearly indicated to the contrary. Thus, as a non-limiting example, a reference to "A and/or B," when used in conjunction with open-ended language such as "comprising" can refer, in some embodiments, to A without B (optionally including elements other than B); in another embodiments, to B without A (optionally including elements other than A); in yet another embodiments, to both A and B (optionally including other elements); etc.

[0048] As used herein in the specification and in the claims, "or" should he understood to have the same meaning as "and/or" as defined above. For example, when separating items in a list, "or" or "and/or" shall be interpreted as being inclusive, i.e., the inclusion of at least one, but also including more than one, of a number or list of elements, and, optionally, additional unlisted items. Only terms clearly indicated to the contrary, such as "only one of" or "exactly one of," or, when used in the claims, "consisting of," will refer to the inclusion of exactly one element of a number or list of elements. In general, the term "or" as used herein shall only be interpreted as indicating exclusive alternatives (i.e. "one or the other but not both") when preceded by terms of exclusivity, "either," "one of," "only one of," or "exactly one of." "Consisting essentially of," when used in the claims, shall have its ordinary meaning as used in the field of patent law.

[0049] The term "pharmaceutically acceptable carrier" or "pharmaceutically acceptable diluent" as used herein is meant to refer to an excipient, carrier or diluent that can be administered to a subject, together with an agent or the pharmaceutical compositions disclosed herein, and which is inert or fails to eliminate the pharmacological activity of the active agent of the pharmaceutical composition. In some embodiments, the pharmaceutically acceptable carrier does fails to destroy or is incapable of eliminating the pharmacological activity of an active agent/vaccine and is nontoxic when administered in doses sufficient to deliver a therapeutic amount of the active agent. The term "pharmaceutically acceptable salt" of nucleic acids as used herein may be an acid or base salt that is generally considered in the art to be suitable for use in contact with the tissues of human beings or animals without excessive toxicity, irritation, allergic response, or other problem or complication. Such salts include mineral and organic acid salts of basic residues such as amines, as well as alkali or organic salts of acidic residues such as carboxylic acids. Specific pharmaceutical salts include, but are not limited to, salts of acids such as hydrochloric, phosphoric, hydrobromic, malic, glycolic, fumaric, sulfuric, sulfamic, suifanilic, formic, toluenesulfonie, methanesulfonic, benzene sulfonic, ethane disulfonic, 2- hydroxyethyl sulfonic, nitric, benzoic, 2-acetoxybenzoic, citric, tartaric, lactic, stearic, salicylic, glutamic, ascorbic, pamoic, succinic, fumaric, maleic, propionic, hydroxymaleic, hydroiodic, phenyiacetic, alkanoic such as acetic, HOOC-(CH_2)n-COOH where n is 0-4, and the like. Similarly, pharmaceutically acceptable cations include, but are not limited to sodium, potassium, calcium, aluminum, lithium and ammonium. Those of ordinary skill in the art will recognize from this disclosure and the knowledge in the art that further pharmaceutically acceptable salts for the pooled viral specific antigens or polynucleotides provided herein, including those listed by Remington's Pharmaceutical Sciences, 17th ed., Mack Publishing Company, Easton, PA, p. 1418 (1985). In general, a pharmaceutically acceptable acid or base salt can be synthesized from a parent compound that contains a basic or acidic moiety by any conventional chemical method. Briefly, such salts can be prepared by reacting the free acid or base forms of these compounds with a stoichiometric amount of the appropriate base or acid in an appropriate solvent.

[0050] As used herein, the terms "prevent" or "preventing," and the like, are meant to refer to reducing the probability of developing a disease or condition in a subject, who does not have, but is at risk of or susceptible to developing a disease or condition.

[0051] As used herein, the terms "subject," "individual," "host," and "patient," are used interchangeably herein and refer to a vertebrate individual, including but not limited to a

mammal or human, for whom diagnosis, treatment or therapy is desired, particularly humans. Mammals include, but are not limited to, murines, simians, humans, farm animals, cows, pigs, goats, sheep, horses, dogs, sport animals, and pets. The methods described herein are applicable to both human therapy and veterinary applications. In some instances in the description of the present disclosure, the term "patient" refers to human patients suffering from a particular disease or disorder. In some embodiments, the subject is a mammal, and, in other embodiments, the subject is a human.

[0052] The terms "treat," "treated," "treating," "treatment," and the like as used herein are meant to refer to reducing or ameliorating a disorder and/or symptoms associated therewith (e.g., a viral infection). "Treating" can refer to administration of the DNA vaccines described herein to a subject after the onset, or suspected onset, of a viral infection. "Treating" includes the concepts of "alleviating," which refers to lessening the frequency of occurrence or recurrence, or the severity, of any symptoms or other ill effects related to a virus and/or the side effects associated with viral therapy. The term "treating" also encompasses the concept of "managing" which refers to reducing the severity of a particular disease or disorder in a patient or delaying its recurrence, e.g., lengthening the period of remission in a patient who had suffered from the disease. It is appreciated that, although not precluded, treating a disorder or condition does not require that the disorder, condition, or symptoms associated therewith be completely eliminated.

[0053] For any therapeutic agent described herein the therapeutically effective amount may be initially determined from preliminary in vitro studies and/or animal models. A therapeutically effective dose may also be determined from human data. The applied dose can be adjusted based on the relative bioavailability and potency of the administered agent. Adjusting the dose to achieve maximal efficacy based on the methods described above and other well-known methods is within the capabilities of the ordinarily skilled artisan. General principles for determining therapeutic effectiveness, which may be found in Chapter 1 of Goodman and Gilman's The Pharmacological Basis of Therapeutics, 10th Edition, McGraw-Hill (New York) (2001), incorporated herein by reference, are summarized below. Pharmacokinetic principles provide a basis for modifying a dosage regimen to obtain a desired degree of therapeutic efficacy with a minimum of unacceptable adverse effects. In situations where the drug's plasma concentration can be measured and related to the therapeutic window, additional guidance for dosage modification can be obtained. Drug products are considered to be pharmaceutical equivalents if they contain the same active ingredients and are identical in

strength or concentration, dosage form, and route of administration. Two pharmaceutically equivalent drug products are considered to be bioequivalent when the rates and extents of bioavailability of the active ingredient in the two products are not significantly different under suitable test conditions.

[0054] As used herein, the terms "comprising" (and any form of comprising, such as "comprise," "comprises," and "comprised"), "having" (and any form of having, such as "have" and "has"), "including" (and any form of including, such as "includes" and "include"), or "containing" (and any form of containing, such as "contains" and "contain"), are inclusive or open-ended and do not exclude additional, unrecited elements or method steps.

[0055] As used herein, the term "about" means that the numerical value is approximate and small variations would not significantly affect the practice of the disclosed embodiments. The term "about" as used herein when referring to a measurable value such as an amount,

[0056] a temporal duration, and the like, is meant to encompass variations of ±10%, ±5%, ±1%, or ±0.1% from the specified value, as such variations are appropriate to perform the disclosed methods. Where a numerical limitation is used, unless indicated otherwise by the context, "about" means the numerical value can vary by ±10%, ±5%, ±4%, ±3%, ±2%, or ±1% and remain within the scope of the disclosed embodiments.

[0057] References in the specification and concluding claims to parts by weight of a particular element or component in a composition denotes the weight relationship between the element or component and any other elements or components in the composition or article for which a part by weight is expressed. Thus, in a compound containing 2 parts by weight of component X and 5 parts by weight component Y, X and Y are present at a weight ratio of 2:5, and are present in such ratio regardless of whether additional components are contained in the compound.

[0058] A weight percent (wt. %) of a component, unless specifically stated to the contrary, is based on the total weight of the formulation or composition in which the component is included.

[0059] As used herein, the terms "administering" and "administration" refer to any method of providing a pharmaceutical preparation to a subject. Such methods are well known to those skilled in the art and include, but are not limited to, oral administration, transdermal administration, administration by inhalation, nasal administration, topical administration, intravaginal administration, ophthalmic administration, intraaural administration, intracerebral administration, rectal administration, and parenteral administration, including

injectable such as intravenous administration, intra-arterial administration, intramuscular administration, and subcutaneous administration. Administration can be continuous or intermittent. In various embodiments, a preparation can be administered therapeutically; that is, administered to treat an existing disease or condition. In further various embodiments, a preparation can be administered prophylactically; that is, administered for prevention of a disease or condition. The terms "parenteral administration" and "administered parenterally" as used herein means modes of administration other than enteral and topical administration, usually by injection, and includes, without limitation, intravenous, intramuscular, intraarterial, intrathecal, intracapsular, intraorbital, intracardiac, intradermal, intraperitoneal, transtracheal, subcutaneous, subcuticular, intraarticular, subcapsular, subarachnoid, intraspinal and intrasternal injection

[0060] As used herein, the terms “optional” or “optionally” mean that the subsequently described event or circumstance can or cannot occur, and that the description includes instances where said event or circumstance occurs and instances where it does not.

[0061] As used herein, the term “diagnosed” means having been subjected to a physical examination by a person of skill, for example, a physician, and found to have a condition that can be diagnosed or treated by the compounds, compositions, or methods disclosed herein

[0062] The disclosure relates to systems, methods and apparatus for storing, transporting, mixing, and injecting a drug as a solution. The disclosed systems, methods and apparatus may be understood more readily by reference to the following detailed description of particular embodiments and the examples included therein and to the figures and their previous and following description.

[0063] The term “contacting” as used herein refers to bringing a disclosed compound and a cell, target receptor, or other biological entity together in such a manner that the compound can affect the activity of the target (*e.g.*, receptor, cell, etc.), either directly; *i.e.*, by interacting with the target itself, or indirectly; *i.e.*, by interacting with another molecule, co-factor, factor, or protein on which the activity of the target is dependent.

[0064] The term “compartment” as used herein refers to a space defined by one or more contiguous surfaces that form an internal volume separated from an outside environment by the one or more surfaces. In some embodiments, the compartment is defined by the one or plurality of surface and can be any shaped volume such as a rectangular prism or cylindrical space. The disclosure generally relates to a device comprising a first, second and/or third compartments that comprise cylindrical or substantially cyndrical cavities or a space with

walls aligned in sequence such that at least one end of the cylindrical or substantially cylindrical space is adjacent to or proximal to at least one end of the other compartments such cylindrically aligned compartments defining an interior of the device. In some embodiments, the compartments are part of a closed system once aligned and affixed via physical connection between the interior or exterior portion or portions of the surface or surfaces.

[0065] The terms "active agent" as used herein refers to a drug or other substance that treats a subject upon administration. In some embodiments, the active agent or derivative thereof is chosen from one or a combination of:

Active Agent	**Dosage***
Hydrocortisone sodium succinate	50 mg/ml to 150 mg/ml
Certolizumab pegol	100 mg/ml to 300 mg/ml
Etanercept	10 mg/ml to 100 mg/ml
Risperidone	2.5 mg/ml to 200 mg/ml
Olanzapine pamoate	1 mg/ml to 200 mg/ml
Aripiprazole	100 mg/ml to 250 mg/ml
Human chorionic gonadotropin	250 IU/ml to 1000 IU/ml
Follicle-stimulating hormone	300 IU/ml to 1000 IU/ml
Gonadotropin releasing hormone analogs	10 mg/ml to 50 mg/ml
Azacitidine	10 mg/ml to 100 mg/ml
Metreleptin	1 mg/ml to 50 mg/ml
Various antivenoms including Apis mellifera, Dolichovespula maculata venom protein, Dolichovespula arenaria, Vespula vulgaris, Polistes Fuscatus, Dolichovespula maculata venom protein, Vespula vulgaris venom protein	0.001 mg/ml to 1mg/ml
Various antibiotics	Various based on patient weight and treatment
Romiplostim	0.1 mg/ml to 1 mg/ml
Pralidoxime chloride	100 mg/ml to 500 mg/ml
Ziprasidone mesylate	5 mg/ml to 10 mg/ml
Omacetaxine mepesuccinate	1 mg/ml to 50 mg/ml
Galcanezumab-gnlm	10 mg/ml to 200 mg/ml
Deferoxamine mesylate	50 mg/ml to 500 mg/ml
Methotrexate sodium	5 mg/ml to 100 mg/ml
Cosyntropin	0.1 mg/ml to 1 mg/ml
Peginterferon alfa-2b	0.1 mg/ml to 1 mg/ml
Bortezomib	0.1 mg/ml to 4 mg/ml
Canakinumab	25 mg/ml to 300 mg/ml
Rilonacept	30 mg/ml to 200 mg/ml
Tedglutide	1 mg/ml to 25 mg/ml

*Dosages are set forth in the approximate amounts. Any dosage should be interpreted to mean "from about X to about Y." As an example the dosage of hydrocortisone sodium succinate should be from about 50 milligram per milliliter to about 150 milligrams per milliliter.

The terms "movable element" is meant to refer to a shaft, plunger, rod, fastener, or other component or element of the device that is movable in any direction relative to a longitudinal

axis of the device. If the device is cylindrical, the longitudinal axis defines a center point in a circumference about the device.

[0066] "Derivatives" of the compounds disclosed herein are pharmaceutically acceptable salts, prodrugs, deuterated forms, radio-actively labeled forms, isomers, solvates and combinations thereof. The "combinations" mentioned in this context are refer to derivatives falling within at least two of the groups: pharmaceutically acceptable salts, prodrugs, deuterated forms, radio-actively labeled forms, isomers, and solvates. Examples of radio-actively labeled forms include compounds labeled with tritium, phosphorous-32, iodine-129, carbon-11, fluorine-18, and the like.

[0067] The terms "disease" as used herein to an ailment of a subject that cause dysfunctional process of the body. In some embodiments, the disease is one or a combination of disease selected from Table 2.

[0068] Table 2

Conditions that can lead to cortisol depletion
Addison's Disease
Autoimmune adrenalitis
Congenital Adrenal Hyperplasia
Adrenalectomy
Adrenomyeloneuropathy
Adrenoleukodystrophy
Adrenal Tumors
Schmidt Syndrome
Hyperaldosteronism
Pituitary Tumors
Pituitary Cysts
Critical-illness Related Corticosteroid Insufficiency

[0069] As used herein, the term "carrier" means a diluent, adjuvant, or excipient with which a compound is administered. Pharmaceutical carriers can be liquids, such as water and oils, including those of petroleum, animal, vegetable or synthetic origin, such as peanut oil, soybean oil, mineral oil, sesame oil and the like. The pharmaceutical carriers can also be saline, gum acacia, gelatin, starch paste, talc, keratin, colloidal silica, urea, and the like. In addition, auxiliary, stabilizing, thickening, lubricating and coloring agents can be used. The pharmaceutical compositions comprise the compounds in a pharmaceutically acceptable carrier. A pharmaceutically acceptable carrier refers to sterile aqueous or nonaqueous

solutions, dispersions, suspensions or emulsions, as well as sterile powders for reconstitution into sterile injectable solutions or dispersions just prior to use. Examples of suitable aqueous and nonaqueous carriers, diluents, solvents or vehicles include water, ethanol, polyols (such as glycerol, propylene glycol, polyethylene glycol and the like), carboxymethylcellulose and suitable mixtures thereof, vegetable oils (such as olive oil) and injectable organic esters such as ethyl oleate. The compounds can be formulated with pharmaceutically acceptable carriers or diluents as well as any other known adjuvants and excipients in accordance with conventional techniques such as those disclosed in Remington: The Science and Practice of Pharmacy, 19th Edition, Gennaro, Ed., Mack Publishing Co., Easton, Pa., 1995. The phrase "pharmaceutically acceptable carrier" is art recognized and includes a pharmaceutically acceptable material, composition or vehicle, suitable for administering compounds of the present invention to mammals. The carriers include liquid or solid filler, diluent, excipient, solvent or encapsulating material, involved in carrying or transporting the subject agent from one organ, or portion of the body, to another organ, or portion of the body. Each carrier must be "acceptable" in the sense of being compatible with the other ingredients of the formulation and not injurious to the patient. Some examples of materials which can serve as pharmaceutically acceptable carriers include: sugars, such as lactose, glucose and sucrose; starches, such as corn starch and potato starch; cellulose, and its derivatives, such as sodium carboxymethyl cellulose, ethyl cellulose and cellulose acetate; powdered tragacanth; malt; gelatin; talc; excipients, such as cocoa butter and suppository waxes; oils, such as peanut oil, cottonseed oil, safflower oil, sesame oil, olive oil, corn oil and soybean oil; glycols, such as propylene glycol; polyols, such as glycerin, sorbitol, mannitol and polyethylene glycol; esters, such as ethyl oleate and ethyl laurate; agar; buffering agents, such as magnesium hydroxide and aluminum hydroxide; alginic acid; pyrogen-free water; isotonic saline; Ringer's solution; ethyl alcohol; phosphate buffer solutions; and other non-toxic compatible substances employed in pharmaceutical formulations. Suitable pharmaceutical carriers are described in "Remington's Pharmaceutical Sciences" by E. W. Martin, which is incorporated herein by reference in its entirety.

[0070] Wetting agents, emulsifiers and lubricants, such as sodium lauryl sulfate and magnesium stearate, as well as coloring agents, release agents, coating agents, sweetening, flavoring and perfuming agents, preservatives and antioxidants can also be present in the compositions.

[0071] Examples of pharmaceutically acceptable antioxidants include: water soluble antioxidants, such as ascorbic acid, cysteine hydrochloride, sodium bisulfate, sodium metabisulfite, sodium sulfite and the like; oil-soluble antioxidants, such as ascorbyl palmitate, butylated hydroxyanisole (BHA), butylated hydroxytoluene (BHT), lecithin, propyl gallate, .alpha.-tocopherol, and the like; and metal chelating agents, such as citric acid, ethylenediamine tetraacetic acid (EDTA), sorbitol, tartaric acid, phosphoric acid, and the like.

[0072] The amount of active ingredient that can be combined with a carrier material to produce a single dosage form will generally be that amount of the compound that produces a therapeutic effect. Generally, out of one hundred percent, this amount will range from about 1 percent to about ninety-nine percent of active ingredient, preferably from about 5 percent to about 70 percent, most preferably from about 10 percent to about 30 percent. Methods of preparing these formulations or compositions include the step of bringing into association a compound of the present invention with the carrier and, optionally, one or more accessory ingredients. In general, the formulations are prepared by uniformly and intimately bringing into association a compound of the present invention with liquid carriers, or finely divided solid carriers, or both, and then, if necessary, shaping the product.

[0073] In solid dosage forms of the invention for oral administration (capsules, tablets, pills, dragees, powders, granules and the like), the active ingredient is mixed with one or more pharmaceutically acceptable carriers, such as sodium citrate or dicalcium phosphate, and/or any of the following: fillers or extenders, such as starches, lactose, sucrose, glucose, mannitol, and/or silicic acid; binders, such as, for example, carboxymethylcellulose, alginates, gelatin, polyvinyl pyrrolidone, sucrose and/or acacia; humectants, such as glycerol; disintegrating agents, such as agaragar, calcium carbonate, potato or tapioca starch, alginic acid, certain silicates, and sodium carbonate; solution retarding agents, such as paraffin; absorption accelerators, such as quaternary ammonium compounds; wetting agents, such as, for example, cetyl alcohol and glycerol monostearate; absorbents, such as kaolin and bentonite clay; lubricants, such a talc, calcium stearate, magnesium stearate, solid polyethylene glycols, sodium lauryl sulfate, and mixtures thereof; and coloring agents. In the case of capsules, tablets and pills, the pharmaceutical compositions may also comprise buffering agents. Solid compositions of a similar type may also be employed as fillers in soft and hardfilled gelatin capsules using such excipients as lactose or milk sugars, as well as high molecular weight polyethylene glycols and the like.

[0074] A tablet may be made by compression or molding, optionally with one or more accessory ingredients. Compressed tablets may be prepared using binder (for example, gelatin or hydroxypropylmethyl cellulose), lubricant, inert diluent, preservative, disintegrant (for example, sodium starch glycolate or cross-linked sodium carboxymethyl cellulose), surface-active or dispersing agent. Molded tablets may be made by molding in a suitable machine a mixture of the powdered compound moistened with an inert liquid diluent.

[0075] The tablets, and other solid dosage forms of the pharmaceutical compositions of the present invention, such as dragees, capsules, pills and granules, may optionally be scored or prepared with coatings and shells, such as enteric coatings and other coatings well known in the pharmaceutical-formulating art. They may also be formulated so as to provide slow or controlled release of the active ingredient therein using, for example, hydroxypropylmethyl cellulose in varying proportions to provide the desired release profile, other polymer matrices, liposomes, catainionic vesicles, and/or microspheres. They may be sterilized by, for example, filtration through a bacteria-retaining filter, or by incorporating sterilizing agents in the form of sterile solid compositions that can be dissolved in sterile water, or some other sterile injectable medium immediately before use. These compositions may also optionally contain opacifying agents and may be of a composition that they release the active ingredient(s) only, or preferentially, in a certain portion of the gastrointestinal tract, optionally, in a delayed manner. Examples of embedding compositions that can be used include polymeric substances and waxes. The active ingredient can also be in microencapsulated form, if appropriate, with one or more of the above-described excipients.

[0076] Liquid dosage forms for oral administration of the compounds of the invention include pharmaceutically acceptable emulsions, microemulsions, solutions, suspensions, syrups and elixirs. In addition to the active ingredient, the liquid dosage forms may contain inert diluent commonly used in the art, such as, for example, water or other solvents, solubilizing agents and emulsifiers, such as ethyl alcohol, isopropyl alcohol, ethyl carbonate, ethyl acetate, benzyl alcohol, benzyl benzoate, propylene glycol, 1,3-butylene glycol, oils (in particular, cottonseed, groundnut, corn, germ, olive, castor and sesame oils), glycerol, tetrahydrofuryl alcohol, polyethylene glycols and fatty acid esters of sorbitan, and mixtures thereof.

[0077] Besides inert diluents, the oral compositions can also include adjuvants such as wetting agents, emulsifying and suspending agents, sweetening, flavoring, coloring, perfuming and preservative agents. Suspensions, in addition to the active compounds, may

contain suspending agents as, for example, ethoxylated isostearyl alcohols, polyoxyethylene sorbitol and sorbitan esters, microcrystalline cellulose, aluminum metahydroxide, bentonite, agar-agar and tragacanth, and mixtures thereof.

[0078] It should be understood that all of the individual values and sub-ranges of values contained within an explicitly disclosed range are also specifically contemplated and should be considered disclosed unless the context specifically indicates otherwise. The foregoing applies regardless of whether in particular cases some or all of these embodiments are explicitly disclosed.

[0079] Unless defined otherwise, all technical and scientific terms used herein have the same meanings as commonly understood by one of skill in the art to which the disclosed method and compositions belong. Although any methods and materials similar or equivalent to those described herein can be used in the practice or testing of the present method and compositions, the particularly useful methods, devices, and materials are as described. Publications cited herein and the material for which they are cited are hereby specifically incorporated by reference. Nothing herein is to be construed as an admission that the present disclosure is not entitled to antedate such disclosure by virtue of prior disclosure. No admission is made that any reference constitutes prior art. The discussion of references states what their authors assert, and applicants reserve the right to challenge the accuracy and pertinency of the cited documents. It will be clearly understood that, although a number of publications are referred to herein, such reference does not constitute an admission that any of these documents forms part of the common general knowledge in the art.

[0080] Throughout the description and claims of this specification, the word "comprise" and variations of the word, such as "comprising" and "comprises," means "including but not limited to," and is not intended to exclude, for example, other additives, components, integers or steps. In particular, in methods stated as comprising one or more steps or operations it is specifically contemplated that each step comprises what is listed (unless that step includes a limiting term such as "consisting of"), meaning that each step is not intended to exclude, for example, other additives, components, integers or steps that are not listed in the step.

[0081] Numerous possible embodiments of the disclosure are envisioned and described in more detail herein. Without deviating from the gravamen of the present disclosure, and staying within the disclosed purposes and functions of this disclosure, minor variations on the physical attributes of the components may be made to engineer a commercial product for various goals, including cost-containment, chemical compatibility, ease-of-use, manufacturing costs and

convenience, various medications, and target disease indications. For instance, the disclosed devices can be utilized with various medications, including but not limited to Solu-cortef®, hydrocortisone, Methylprednisolone for Multiple Sclerosis, chemotherapies for certain cancers, chronic treatment medications for autoimmune conditions, biologic treatments, Glucagon for hypoglycemic emergencies, Ticarcillin for high morbidity infections, Chlordiazepoxide for alcohol withdrawal symptoms, and Desoxycorticosterone pivalate for veterinary emergencies, among others.

[0082] Some embodiments of the present disclosure benefit patients living with Congenital Adrenal Hyperplasia (CAH), Addison's disease, and idiopathic adrenal insufficiency in the administration of their medication, such as in times of adrenal crisis. Some embodiments of the disclosure are projected to improve the administration efficacy of lifesaving injectable medication, such as for the 144 million people worldwide living with CAH, Addison's disease, and idiopathic adrenal insufficiency. Some exemplary embodiments of the disclosure require as few as four steps for injection and can be designed for people experiencing an adrenal crisis and their caregivers. For example, exemplary embodiments of the disclosure can improve efficacy specifically of Solu-cortef® medication with a primary indication of use in patients with CAH.

[0083] In some embodiments, the disclosure provides a device comprising: (1) the transportation assembly comprises a main tube and a handle fixed at a mixing end of the main tube opposite of an injection end of the main tube; (2) the storage assembly is adapted to fit within a tube bore of the main tube and comprises a first seal, a liquid-impermeable plug adapted to fit within the first seal, a liquid ejector plunger adapted to couple the first seal and liquid-impermeable plug, a drug container adapted to contain an unmixed medication, a foil seal attached to a liquid-ejection side of the drug container, a second seal adapted to couple to an injection side of drug container opposite of the liquid-ejection side, and optionally an air filter adapted to be placed between the second seal and the injection side of the drug container; (3) the mixture assembly is adapted to attach to the handle and partially fit within the tube bore of the main tube, is adapted to engage the storage assembly, and comprises a twist cap including internal threading and rotatably engaging the handle, a plunger primer engaging the twist cap, and a mixing spring engaging the primer, wherein the primer has flanges located within the internal threading, the primer traverses a cap bore of the twist cap, a handle bore of the handle, and the tube bore of the main tube, and the mixing spring is adapted to fit within the tube bore of the main tube and between the primer and the first seal of the storage assembly; and (4) the

injection assembly is adapted to engage the injection end of the main tube and partially fit within the tube bore of the main tube, is adapted to engage the storage assembly, and comprises a protective cap, a cap spring, a hollow needle, a needle driver, and an injection spring, wherein the protective cap is adapted to movably cover an injection tip of the needle, the cap spring is adapted to be positioned between the protective cap and the needle driver and is adapted to be compressed to displace the protective cap to uncover the injection tip of the needle, the needle traverses and is integrated within the needle driver, the needle traverses a tube closure at the injection end of the tube bore of the main tube, and the injection spring is adapted to be positioned between the tube closure and the second seal of the storage assembly, wherein the needle is adapted to puncture the second seal upon fully compressing the protective cap against the needle driver and the needle driver against the injection end of the main tube.

[0084] In some embodiments, the device or apparatus of the disclosure is used to conveniently transport and properly store the drug within the device or apparatus until the drug is needed by the patient, at which time the apparatus is used to administer the drug to the patient. To administer the drug to the patient, the drug must be mixed with a liquid, such as water, to prepare a drug-in-solution mixture. To use the mixture assembly to mix the drug, the user twists the twist cap relative to the handle, causing the flanges of the plunger primer to rotate within the threading, causing the primer to move toward and compress the mixing spring, causing the mixing spring to apply pressure to the first seal and propel the liquid ejector plunger toward the drug container. As the liquid ejector plunger moves toward the drug container, the liquid ejector plunger punctures the foil seal and enters into a container bore of the drug container, causing a liquid stored in the main tube between the first seal and foil seal to enter the drug container and mix with the unmixed medication to create a drug-in-solution. Movement of the liquid ejector plunger toward and against the drug container creates liquid pressure that forces the drug-in-solution through the drug container toward the injection end of the main tube and pushes the second seal toward the tube closure, thereby compressing the injection spring. Displacement of the second seal toward the tube closure creates a chamber between the second seal (proximate the injection end) and the drug container (proximate the mixing end), and the chamber contains the drug-in-solution under pressure of the injection spring against the second seal. The injection assembly optionally further comprises a safety device, such as a removable safety clip, that is adapted to be attached to the needle driver, the protective cap, and/or the main tube to prevent the protective cap and the needle driver from moving to compress the cap spring and uncover the injection tip of the needle, and to prevent

the needle driver from moving toward the main tube and puncturing the second seal. The safety device may be disengaged, such as by removal of the safety clip, to allow engagement of the injection assembly. Upon removal of the removable safety clip, the apparatus is ready to have the protective cap be pressed against the patient, such as against the patient's bare skin. In the absence of the removable safety clip, pressing the protective cap against the patient causes the protective cap to retract toward the needle drive, causes the needle driver to retract toward the main tube, and causes the needle driver to drive the needle inward into the tube bore of the main tube. If the mixture assembly has been used to mix the drug, then the drug-in-solution is in the chamber awaiting injection into the patient, and driving the needle inward will cause an input tip of the needle to puncture the second seal. The input tip of the needle then enters the chamber, allowing the drug-in-solution to enter a needle bore of the hollow needle and drain the drug-in-solution from the chamber. The drug-in-solution enters the input tip of the needle, traverses the needle bore, and exits the needle at the injection tip. The injection spring, having been compressed by the mixing steps of using the mixture assembly, applies pressure to the second seal to move the second seal back toward the drug container, reducing a chamber volume of the chamber, and pushing the drug-in-solution out of the chamber, through the needle, out of the injection tip, and into the patient.

[0085] Further aspects of the disclosure are set forth herein. The details of exemplary embodiments of the disclosure are set forth in the accompanying drawings and the description below. Other features, objects, and advantages of the invention will be apparent from the description and drawings, and from the claims.

[0086] In some embodiments, in the disclosed device: (1) the transportation assembly comprises a main tube and a spring plunger screwed into the main tube at a mixing end of the main tube opposite of an injection end of the main tube; (2) the storage assembly is adapted to fit within a tube bore of the main tube and comprises a first seal, a liquid-impermeable plug adapted to fit within the first seal, a liquid ejector plunger adapted to couple the first seal and liquid-impermeable plug, a drug container adapted to contain an unmixed medication, a foil seal attached to a liquid-ejection side of the drug container, a second seal adapted to couple to an injection side of drug container opposite of the liquid-ejection side, and optionally an air filter adapted to be placed between the second seal and the injection side of the drug container; (3) the mixture assembly is adapted to attach to the main tube and partially fit within the tube bore of the main tube, is adapted to engage the storage assembly, and comprises a push rod having a recessed annular cavity and slidably engaging the main tube, wherein the push rod

traverses a tube opening of the tube bore of the main tube, the push rod is adapted to fit within the tube bore of the main tube and against the plunger and the first seal of the storage assembly, and the spring plunger of the transportation assembly is adapted to engage the recessed annular cavity when the push rod is pushed further into the tube bore of the main tube, from an un-pushed position to a pushed position to mix the drug and liquid; and (4) the injection assembly is adapted to engage the injection end of the main tube and partially fit within the tube bore of the main tube, is adapted to engage the storage assembly, and comprises a hollow needle, a needle driver, a tube plug, and an injection spring, wherein the needle traverses and is integrated within the needle driver, the needle driver is adapted to slide over the injection end of the main tube, the needle traverses the tube plug, which comprises a tube closure at the injection end of the tube bore of the main tube, and the injection spring is adapted to be positioned between the tube closure and the second seal of the storage assembly, wherein the needle is adapted to puncture the second seal upon fully compressing the needle driver against the injection end of the main tube. In some embodiments, the second seal may comprise a chamber piston having an interior cavity with a piston center hole proximate the drug container, a septa placed within the interior cavity and coving the piston center hole, and a spring guide placed within the interior cavity and covering the septa, in which the spring guide includes a guide center hole and engages the injection spring of the injection assembly.

[0087] In some embodiments, the disclosed device or apparatus is used to conveniently transport and properly store the drug within the device or apparatus until the drug is needed by the patient, at which time the apparatus is used to administer the drug to the patient. In some embodiments, the needle driver is adapted to be transported and stored detached from the rest of the apparatus until the apparatus is used. The detached needle driver optionally may include tip protectors at the injection tip and the input tip to protect the tips and protect users against accidental needle pricks. When the drug is to be administered to the patient, the drug must be mixed, the needle driver is prepared for use (e.g., removal of any tip protectors and sterile packaging), the needle driver is held by its sidewalls, the injection tip of the needle is inserted into the patient (preferably with the patient's skin flush against a surface of the needle driver proximate the injection tip), and the needle driver is slid onto the injection end of the main tube to cause the input tip of the needle to puncture the second seal and to cause the drug-in-solution to drain from the chamber. In some embodiments, the needle driver is slid onto the main tube, beginning the release the drug-in-solution, before the injection tip of the needle is inserted into the patient's skin.

[0088] Prior to administering the drug to the patient, the drug must be mixed with a liquid, such as water, to prepare a drug-in-solution mixture. To use the mixture assembly to mix the drug in the second particular embodiment, the user pushes the push rod relative to the main tube, until the recessed annular cavity reaches the spring plunger, causing the spring plunger to extend into the recessed annular cavity and lock the push rod in place. Pushing the push rod causes the liquid ejector plunger to move toward to apply pressure to the first seal and propel the liquid ejector plunger toward the drug container. As the liquid ejector plunger moves toward the drug container, the liquid ejector plunger punctures the foil seal and enters into a container bore of the drug container, causing a liquid stored in the main tube between the first seal and foil seal to enter the drug container and mix with the unmixed medication to create a drug-in-solution. Movement of the liquid ejector plunger toward and against the drug container creates liquid pressure that forces the drug-in-solution through the drug container toward the injection end of the main tube and pushes the second seal toward the tube closure, thereby compressing the injection spring. Displacement of the second seal toward the tube closure creates a chamber between the second seal (proximate the injection end) and the drug container (proximate the mixing end), and the chamber contains the drug-in-solution under pressure of the injection spring against the second seal. The injection assembly optionally further comprises a safety device, such as a removable safety cap, that is adapted to be attached to the main tube to protect the tube closure at the injection end. The safety device may be disengaged, such as by removal of the safety cap, to allow engagement of the injection assembly. Upon removal of the removable safety device, the apparatus is ready to have the needle driver be pressed against the patient, such as flush against the patient's bare skin, with the needle piercing the patient's skin to the desired depth determined by the length of the needle extending beyond the needle driver, from the injection tip to the surface of the needle driver proximate the injection tip. Pressing the needle driver against the patient may be in conjunction with, and to cause, sliding of the needle driver onto the main tube, thereby causing the needle driver to drive the needle inward into the tube bore of the main tube. Assuming the mixture assembly has been used to mix the drug, the drug-in-solution is in the chamber awaiting injection into the patient, and driving the needle inward will cause an input tip of the needle to puncture the second seal. The input tip of the needle then enters the chamber, allowing the drug-in-solution to enter a needle bore of the hollow needle and drain the drug-in-solution from the chamber. The drug-in-solution enters the input tip of the needle, traverses the needle bore, and exits the needle at the injection tip. The injection spring, having been compressed by the mixing steps

of using the mixture assembly, applies pressure to the second seal to move the second seal back toward the drug container, reducing a chamber volume of the chamber, and pushing the drug-in-solution out of the chamber, through the needle, out of the injection tip, and into the patient. Alternatively, the needle driver may be slid onto the main tube, beginning the release the drug-in-solution, before the injection tip of the needle is inserted into the patient's skin.

[0089] Further aspects of the disclosure are set forth herein. The details of exemplary embodiments of the disclosure are set forth in the accompanying drawings and the description below. Other features, objects, and advantages of the invention will be apparent from the description and drawings, and from the claims.

[0090] Referring now to **FIG. 1A** and **FIG. 1B**. **FIG. 1A** shows a side cross sectional view of one embodiment of the device disclosed herein. An assembly **100** contains two chambers, a first chamber **102** and a second chamber **104**, that are separated by a seal that, in an unactivated state, prevent material transfer between the two chambers. The first chamber **102** contains a material, either a liquid, solid, semisolid, or gas, to be combined with another material contained in the second chamber **104**. The material contained within the second chamber **104** may also be a liquid, solid, semisolid, or gas. Upon activation, the material situated within the first chamber **102** is pushed through the second chamber **104**, whereby the material situated within the second chamber **104** is combined with the material from the first chamber **102**. These materials are combined through the action of a compression mechanism **114**, shown in **FIG. 1B**. Compression mechanism **114** moves the material from the first chamber **112** (equal to **102** in **FIG. 1A**) to the second chamber **110** (equal to **104** in **FIG. 1A**).

[0091] Referring now to **FIG. 2A**. **FIG. 2A** shows a side cross sectional view of another embodiment of the device disclosed herein. The device in **FIG. 2A** further comprises moveable components, chamber barriers, seals, and other components associated with an auto-injector. The device assembly **200** is comprised of a housing **218** that contains the three chambers and associated components. The device contains a compression assembly **202** that interacts with an insertion rod **204**. This insertion rod pushes through the first chamber **216** to penetrate a chamber seal **206**. The chamber seal **206** is an impermeable membrane preventing material transfer between the first chamber **216** and the second chamber **208**. Upon device activation and subsequent compression of the compression assembly **202**, the insertion rod **204** penetrates the barrier **206** and forces material from the first chamber **216** through penetrated seal **206** and into the second chamber chamber **208**. As material from the first chamber **216** moves into the second chamber **208**, it is combined with the material in the second chamber

208 and moves together into the third chamber **210**. As the combined materials move into the third chamber **210**, they collectively push seal assembly **214** into the third chamber **210**. As seal assembly **214** is pushed inward into the third chamber **210**, spring **212** is compressed, which stores energy that will later be used to drive the materials out of the device through the needle for injection.

[0092] Referring now to **FIG. 2B**, which shows a side cross sectional view of another embodiment of the device disclosed herein where the insertion rod that breaks the seal (**220**, **254**) is two components instead of one. Device assembly **220** contains a housing **256**, three chambers (the first chamber **254**, the second chamber **234**, and the third chamber **240**), an insertion rod assembly **260** that is comprised of multiple components including an inner insertion rod **224**, outer housing **258** and seal **226**. Inner insertion rod **224** is further comprised of a fluid path **230** and fluid vent **228** that allow for fluid transfer between the first chamber **254** and the second chamber **234**. As compression mechanism **222** pushes inward onto assembly **260**, the inner assembly rod pushes into and penetrates barrier **232**. Upon penetration of barrier **232**, fluid can either enter fluid vent **228** and pass through fluid path **230** into the second chamber **234**, or fluid can move in the reverse direction from the second chamber **234** through fluid path **230** and out fluid vent **228**. Once inner insertion rod **224** has penetrated barrier **232** and backside becomes flush with outer assembly **258**, the entire assembly **260** is compressed by compression mechanism **222** into the second chamber **234**. The insertion component on the inner rod will move entirely into the second chamber **234** and the outer assembly and larger component of the insertion rod will rest flush against the outside of the second chamber **234**. During this compression material from the first chamber **254** moves through the first chamber **254** and is combined with the material in the second chamber **234**. Optional seals **250** around chamber housing **236** prevent material flow outside the chamber. The combined materials are then pushed into the third chamber **240**. As the combined materials are pushed into the third chamber **240**, moveable seal assembly **246** moves inward into the third chamber **240** creating space for the combined materials. Moveable seal assembly **246** is comprised of seals **238** and housing **262** that is a needle guide and attachment point for spring **244**.

[0093] As assembly **246** moves into the third chamber **240**, seal **248** is pierced by the non-injection side of injection needle **242**. This allows fluid to enter injection needle **242** provided the injection end of needle **242** is open. Spring **244** is compressed as assembly **246** moves

inward into the third chamber **240**. The compressive force of spring **244** will be used to inject the combined materials.

[0094] Referring now to **FIG. 3A**, shows a side cross sectional view of another embodiment of the device disclosed herein with a needle assembly having a needle guard **302** attached to the main device **300**. In some embodiments, the needle assembly and guard is attached to the device through a threaded system, but it could also be attached through glue, welding, snap fits, compression fits or other known attachment methods in the art.

[0095] A more detailed view of the needle assembly and guard of this embodiment is shown in **FIG. 3B**. In this condition, the device has not been activated and no component combination has occurred. Needle guard **304** is comprised of a housing **306** that is held in an extended position covering needle **308** by spring **312**. The injection end of the needle is covered by seal **314**, which prevents fluid from entering or leaving the needle until the guard **304** is retracted and the needle **308** is exposed through seal **314**. To activate the needle guard **304**, safety pin **310** is removed from the device, which allows housing **306** to be retracted over the device housing thereby exposing the needle **308**. Upon retraction of needle guard **316**, as shown in **FIG. 3C**, needle **318** is exposed as needle housing **320** is retracted and needle **318** has penetrated seal **322**, allowing material to be injected. In the condition shown in **FIG. 3C**, the device has been activated and components combined, but injection has not yet begun.

[0096] **FIG. 3D** shows yet another more detailed embodiment of the needle guard **328** and assembly **322**. Guard housing **324** is guided through movements by guides **328** that align with and lay in guide tracks **326**. Needle **342** is held in place by needle attachment **330**. Needle **342** is sealed at the injection end by seal **346**, which prevents fluid from entering or leaving the device until needle guard housing **322** is retracted to expose needle **342**. To activate the needle guard, safety clip **338** is removed, which allows assembly **322** to retract and expose the needle through seal **346**. After injection, spring **344** pushes the needle guide back into place to conceal the needle.

[0097] Referring now to **FIG. 3E**, which shows another embodiment of the needle assembly and needle guard where needle guard **348** consists of housing **350** and is guided through movements by the body of the device **352**. The injection end of the needle is sealed through seal **354**.

[0098] Referring now to **FIG. 4**, which shows a side cross sectional view of another embodiment with the device body, needle assembly and guard attached. Needle assembly and guard **400** are attached to the main device body **424** through attachment points **404**. Attachment

may be threads, glue, welds, press fit, snap fit or other commonly known method in the art. The device body consists of an activation mechanism **426** and three chambers (the first chamber **418**, the second chamber **436**, and the third chamber **444**), all contained within housing **420**. Insertion rod **428** is contained within the first chamber **418**, and optionally contains seal **430**. Fluid path **432** and fluid vent **422** are contained within insertion rod **428**. The end of insertion rod **428** is adjacent to barrier **434**, which separates the first chamber **418** and the second chamber **436**. The second chamber **436** is contained within housing **438**, which may contain seals **414** or may be a component of the housing itself. The second chamber **436** is maintained separate from the third chamber **444** through moveable seal assembly **410** and optional seal **440**. Seal **412** is attached to moveable seal assembly **410** and prevents material from entering needle **448** prior to device activation.

[0099] Upon device activation, compression mechanism **426** pushes insertion rod **428** through barrier **434** and into the second chamber **436**. Insertion rod **428** enters the second chamber **436** through opening **416**, which allows for material transfer and possible seating of insertion rod **428**. Material from the second chamber **436** and the first chamber **418** move through the second chamber **436** and moveable seal assembly **410** moves into the third chamber **444** to compress spring **408**. The combined material resides inside the third chamber **444** until needle guard assembly **400** is retracted for injection.

[00100] To allow for injection after device activation, safety clip **442** is removed, allowing needle guard **400** to retract and expose needle **448**. Prior to retraction of needle guard **400**, the injection end of the needle is sealed by seal **450**, which prevents material from entering or leaving needle **448**. Upon retraction, needle **448** is exposed through needle port **452**. During retraction, needle guides **446** follow needle guide tracks **402** to allow for proper needle guard movement. Needle **448** is attached through needle attachment **406**.

[00101] The device of the disclosure can be maintained in 4 different operable conditions, shown in **FIG. 5A-5D**. Referring to **FIG. 5A**, the first operable condition **500** is before device activation where no material combination has occurred. Compression mechanism **514** has not been activated and has not compressed insertion rod **512**. The first chamber **510** contains the first material to be combined and seal **516** has not been penetrated. The second chamber **508** contains all material to be combined. Moveable seal assembly **506** is acting as a barrier between the second chambers **508** and the third chamber **504**, and no material has entered the thirs chamber **504**. Safety pin **518** is still in place on the device and the needle guard has not been retracted.

[00102] Referring to **FIG. 5B**, in the second operable condition, compression assembly **544** has been partially activated. The insertion rod has penetrated into the first chamber **546** by breaking seal **548**. The first chambers **546** and the second chamber **550** are in fluid communication but the materials are not fully combined.

[00103] Referring to **FIG. 5C**, in the third operable condition **520,** compression assembly **524** has been fully activated and has pushed insertion rod **526** into the first chamber **527**. Materials have been combined and moved into the second chamber **522**. Moveable seal **528** has retracted and compressed spring **530**. Safety pin **529** is in place, needle guard **532** has not been retracted and seal **534** has not been penetrated by the injection needle.

[00104] Referring to **FIG. 5D**, in the fourth operable condition **536**, the safety pin has been removed and the needle guard **538** has been retracted, exposing injection needle **544**. Spring **542** has pushed back into the device and fluid has been driven out of needle **544**. Moveable seal **540** has been pushed back towards the middle of the device.

[00105] Referring now to **FIG. 6** which shows the three main operable conditions plus the final state when the device is removed from the injection site. Prior to injection **600**, the device is brought close to the surface for injection. Once at or near the injection surface **602**, the pin is removed and then the device is pushed downward **604** pushing the needle through the injection surface. After injection **606** is complete, the device is lifted and the needle guard conceals the needle again.

[00106] Referring now to **FIG. 7** which shows one embodiment of internal components of the second chamber **722** and how it resides between the other two chambers (the first chamber **714** and the third chamber **728**). The second chamber **722** is contained within housing **706**, which is itself contained within housing **700** and optionally surrounded by seals **710**. Insertion rod **716** is initially held adjacent barrier **712**. Insertion rod **716** contains a fluid path **718** and a piercing end for penetrating barrier **712**. The piercing end **720** may have one or more pointed or blunt protrusions to allow for easier penetration of seal **712**. Once seal **712** is penetrated the insertion rod pushes into the second chamber **722** through opening **708** that may be beveled or otherwise shaped for ease of insertion rod entry and material transfer from the first chamber **714** to the second chamber **722**. As material from the first chamber **714** is pushed into and through the second chamber **722**, moveable seal assembly **724** and needle seal **704** move into the third chamber **728** to allow for material transfer into the third chamber **728**. Upon movement into the third chamber **728**, spring **702** is compressed and needle seal **704** is pierced by the non-injection side of needle **726**, allowing material to enter the needle during injection.

[00107] Referring now to **FIG. 8**, which shows a side cross sectional view of one embodiment of the device disclosed herein which uses a screw mechanism to drive a plunger downward. Assembly **800** shows a device that is not activated and, upon turning in assembly **802**, the assembly drives a plunger into the device to compress the components and activate the device.

[00108] The devices described herein may be embodied in specific articles of various dimensions, using components of various dimensions, and applied in use according to various operating parameters, for various purposes.

[00109] Those dimensional features and parameters of use, which may be the subject of selection for a particular purpose may include the force applied to the injection site for injecting the active agent, the volume of medicament to be delivered, the size of the internal passage through the needle, the injection depth as determined by the needle length protruding from the device, the spring force applied to the needle to expel the medicament, and the time interval required for injection of the medicament upon actuation of the device. It is believed that these factors individually and/or collectively in various combinations, and possibly others, may contribute to the effectiveness of the device in delivering the medicament into the patient's body, and in dispersion of the medicament from the initial injection site into the surrounding bodily tissues, which may be referred to as the "uptake" of the medicament.

[00110] The force applied to the injection site is ultimately determined by how hard the user chooses to press the device against the user's body, but a minimum level of that force is determined by the design of the device and the force required to actuate the device. In some embodiments, the actuation force to release the active agent is between about 4 to about 8 pounds. In some embodiments, the actuation force to release the active agent is between about 2 to about 8 pounds. In some embodiments, the actuation force to release the active agent is between about 4 to about 6 pounds. In some embodiments, the actuation force to release the active agent is between about 2 to about 6 pounds. In some embodiments, the force actually applied by the user is be at least about 2 pounds. In some embodiments, the force actually applied by the user is be at least about 3 pounds. In some embodiments, the force actually applied by the user is be at least about 4 pounds. In some embodiments, the force actually applied by the user is be at least about 5 pounds. In some embodiments, the force actually applied by the user is be at least about 6 pounds. In some embodiments, the force actually applied by the user is be at least about 7 pounds. In some embodiments, the force actually applied by the user is be at least about 8 pounds.

[00111] The force needed to inject the active agent into a subject may also vary depending on the viscosity of the resultant fluid mixture of the active agent and the pharmaceutically acceptable carrier. In some embodiments, the fluid mixture of the active agent and the pharmaceutically acceptable carrier to be injected by the disclosed device has a viscosity of from about 1 centipoise (cP) to about 150 cP. In some embodiments, the fluid mixture of the active agent and the pharmaceutically acceptable carrier to be injected by the disclosed device has a viscosity of from about 5 cP to about 125 cP. In some embodiments, the fluid mixture of the active agent and the pharmaceutically acceptable carrier to be injected by the disclosed device has a viscosity of from about 10 cP to about 100 cP. In some embodiments, the fluid mixture of the active agent and the pharmaceutically acceptable carrier to be injected by the disclosed device has a viscosity of from about 15 cP to about 75 cP. In some embodiments, the fluid mixture of the active agent and the pharmaceutically acceptable carrier to be injected by the disclosed device has a viscosity of from about 20 cP to about 60 cP. In some embodiments, the fluid mixture of the active agent and the pharmaceutically acceptable carrier to be injected by the disclosed device has a viscosity of from about 25 cP to about 50 cP. In some embodiments, the fluid mixture of the active agent and the pharmaceutically acceptable carrier to be injected by the disclosed device has a viscosity of about 1 cP. In some embodiments, the fluid mixture of the active agent and the pharmaceutically acceptable carrier to be injected by the disclosed device has a viscosity of about 5 cP. In some embodiments, the fluid mixture of the active agent and the pharmaceutically acceptable carrier to be injected by the disclosed device has a viscosity of about 10 cP. In some embodiments, the fluid mixture of the active agent and the pharmaceutically acceptable carrier to be injected by the disclosed device has a viscosity of about 25 cP. In some embodiments, the fluid mixture of the active agent and the pharmaceutically acceptable carrier to be injected by the disclosed device has a viscosity of about 50 cP. In some embodiments, the fluid mixture of the active agent and the pharmaceutically acceptable carrier to be injected by the disclosed device has a viscosity of about 75 cP. In some embodiments, the fluid mixture of the active agent and the pharmaceutically acceptable carrier to be injected by the disclosed device has a viscosity of about 100 cP. In some embodiments, the fluid mixture of the active agent and the pharmaceutically acceptable carrier to be injected by the disclosed device has a viscosity of about 110 cP. In some embodiments, the fluid mixture of the active agent and the pharmaceutically acceptable carrier to be injected by the disclosed device has a viscosity of about 120 cP. In some embodiments, the fluid mixture of the active agent and the

pharmaceutically acceptable carrier to be injected by the disclosed device has a viscosity of about 130 cP. In some embodiments, the fluid mixture of the active agent and the pharmaceutically acceptable carrier to be injected by the disclosed device has a viscosity of about 140 cP. In some embodiments, the fluid mixture of the active agent and the pharmaceutically acceptable carrier to be injected by the disclosed device has a viscosity of about 150 cP. In some embodiments, the fluid mixture of the active agent and the pharmaceutically acceptable carrier to be injected by the disclosed device has a viscosity of great than about 150 cP.

[00112] The time interval over which the needle is held in place against the injection site after injection is typically based upon manufacturer's recommendations as printed upon the auto-injector label. In some embodiments, a time interval of at least about 2 seconds is recommended. In some embodiments, a time interval of at least about 3 seconds is recommended. In some embodiments, a time interval of at least about 4 seconds is recommended. In some embodiments, a time interval of at least about 5 seconds is recommended.

[00113] The volume of medicament to be delivered is dependent upon the internal dimensions of the device which are selected by the manufacturer to administer the desired volume of active agnets. For example, when administering epinephrine with an auto-injector, an injected volume of about 0.15 mL or about 0.30 mL may be used. Higher volumes of injectant may also be administered. In some embodiments, from about 0.50 mL to about 3.0 mL volumes may be rapidly injected with any of the disclosed devices, depending upon viscosity and other factors. In these embodiments, references to an injected or dispensed volume of active agent, are referring to the total volume of liquid injected into the patient, and those references are not related to the amount of active ingredient contained in that injected volume. However, in some embodiments, the device of the disclosure may be used to deliver a predetermined amount or dosage of an active agent into a subject. In some embodiments, when cortisone or cortisone derivatives is used, the cortisone or cortisone derivative is used with the disclosed device in a dosage of from about 5 mg to about 500 mg in weight. In some embodiments, the cortisone or cortisone derivative is used with the disclosed device in a dosage of from about 10 mg to about 400 mg in weight. In some embodiments, the cortisone or cortisone derivative is used with the disclosed device in a dosage of from about 25 mg to about 300 mg in weight. In some embodiments, the cortisone or cortisone derivative is used with the disclosed device in a dosage of from about 50 mg to about 250 mg in weight. In some

embodiments, the cortisone or cortisone derivative is used with the disclosed device in a dosage of from about 60 mg to about 200 mg in weight. In some embodiments, the cortisone or cortisone derivative is used with the disclosed device in a dosage of from about 75 mg to about 1500 mg in weight. In some embodiments, the cortisone or cortisone derivative is used with the disclosed device in a dosage of from about 5 mg/mL to about 300 mg/mL in a weight to volume solution of active agent in pharmaceutically acceptable carrier. In some embodiments, the cortisone or cortisone derivative is used with the disclosed device in a dosage of from about 10 mg/mL to about 250 mg/mL in a weight to volume solution of active agent in pharmaceutically acceptable carrier. In some embodiments, the cortisone or cortisone derivative is used with the disclosed device in a dosage of from about 15 mg/mL to about 200 mg/mL in a weight to volume solution of active agent in pharmaceutically acceptable carrier. In some embodiments, the cortisone or cortisone derivative is used with the disclosed device in a dosage of from about 20 mg/mL to about 175 mg/mL in a weight to volume solution of active agent in pharmaceutically acceptable carrier. In some embodiments, the cortisone or cortisone derivative is used with the disclosed device in a dosage of from about 25 mg/mL to about 150 mg/mL in a weight to volume solution of active agent in pharmaceutically acceptable carrier. In some embodiments, the cortisone or cortisone derivative is used with the disclosed device in a dosage of from about 30 mg/mL to about 1250 mg/mL in a weight to volume solution of active agent in pharmaceutically acceptable carrier.

[00114] It will be appreciated that the amount of active agent, such as cortisone or cortisone derivatives, in an injected volume of medicament may vary. The amount of active agent in that injected volume may differ depending upon the dosage prescribed for the patient. Prescribed dosages of cortisone or cortisone derivative may for example be about 1 mg, about 5 mg, about 10 mg, about 25 mg, about 50 mg, about 75 mg, about 100 mg, about 125 mg, about 150 mg, about 175 mg, about 200 mg, about 225 mg, about 250 mg, about 275 mg, or about 300 mg. Those dosages of active agent may be formulated with other ingredients, such as a pharmaceutically acceptable carrier, to comprise a volume of medicament of from 0.15 mL up to about 0.6 mL. The amount of active agent is not necessarily directly related to the volume of medicament to be injected, because the volume can be diluted as desired. For example, 0.30 mL of injected medicament may contain about 1 mg or about 25 mg of active agent.

[00115] The size of the internal passage through the needle is determined by the manufacturer by selection of the appropriate gauge of tubing for the needle. Small diameter stainless steel tubing typically used for hypodermic needles can be obtained in various standard

sizes referred to as gauges. The gauge determines the nominal outside diameter of the tubing. Then for each gauge the tubing is typically available in various wall thickness referred to as Regular Wall (RW), Thin Wall (TW), Extra Thin Wall (ETW) and Ultra Thin Wall (UTW). The thinner the wall for a given gauge of tubing, the larger the internal diameter or bore of the tubing will be. And for each standard tubing size, such as for example a 22 gauge RW tubing, the applicable standards specify minimum, nominal and maximum values for each dimension such as the internal diameter. For the device of the present disclosure, the needle may be constructed from RW stainless steel tubing of gauges as large as 18 gauge and as small as 24 gauge. Wall thicknesses other than RW could also be selected. The table below shows standard minimum, nominal and maximum inner diameters for 18 to 24 gauge RW stainless steel tubing. All dimensions are given in inches.

GAUGE	TYPE	MIN I.D.	NOMINAL I.D.	MAX I.D.
18	RW	0.0315	0.0330	0.0345
19	RW	0.0255	0.0270	0.0285
20	RW	0.0230	0.0238	0.0245
21	RW	0.0195	0.0203	0.0210
22	RW	0.0155	0.0163	0.0170
23	RW	0.0125	0.0133	0.0140
24	RW	0.0115	0.0123	0.0130

[00116] Thus, selecting the smallest of these inner diameters, the minimum inner diameter for the 24 gauge RW tubing is about 0.0115 inch. If the 23 gauge RW tubing is selected, its inner diameter would be at least about 0.0125 inch. If the 22 gauge RW tubing is selected, its inner diameter would be at least about 0.0155 inch. For all of the selections shown in the above table, the inner diameter of the needle would be no greater than about 0.0345 inch, which is the maximum inner diameter for an 18 gauge RW tubing.

[00117] The injection depth as determined by the needle length protruding from the disclosed device is illustrated for example in **FIG. 6**. That dimension is determined by the dimensions of the various internal components as is suitable for the particular active agent to be injected. For example, for subcutaneous injection of an active agent, the device may provide injections in the subcutaneous region wherein the injection is at a depth of from about 0.15 inches to about 0.30 inches in some embodiments. In other embodiments, the injection is at a

depth of from about 0.2 inches to about 0.25 inches within the subject. For intramuscular injections of an active agent, the disclosed device may provide injections in the intramuscular region wherein the injection is at a depth of from about 0.4 inches to about 0.7 inches in some embodiments. In other embodiments, the injection is at a depth of about 0.6 inches within the subject. In some embodiments, the disclosed device may provide intramuscular injections at a depth up to about 1.25 inches within the subject.

[00118] The spring force applied to expel the active agent is determined by the manufacturer's selection of the power spring, and by the design of the various internal components which will affect how much of the available spring force is actually applied. A given spring, when compressed, will have a certain static force which it applies to the surrounding structure which holds the spring in the compressed state. When the spring is released, however, some of its potential energy will be lost to friction and to moving the needle and collapsing the needle sheath, so that the force the spring actually applies to the plunger to expel the active agent, which can be referred to as a dynamic force applied to the plunger, will be less than the initial static force output of the spring. For example a spring may have a nominal static force output of about 100 Newtons when compressed. Due to manufacturing tolerances the actual static force output of that spring may be in the range of from about 0 to about 100 Newtons. Then the dynamic force that spring actually applies to the plunger to expel the active agent may be in the range of from about 10 to about 75 Newtons. That dynamic force may be described as being at least about 10 Newtons, about 20 Newtons, about 30 Newtons, about 40 Newtons, about 50 Newtons, about 60 Newtons, about 70 Newtons, about 80 Newtons, about 90 Newtons, or about 100 Newtons.

[00119] The devices according to the disclosure can be used to deliver a wide range of active agents into a subject. Of particular interest are the active agents provided in Table 1 with the dosage listed therein.

Table 1. Active agents suitable for use in the devices of the disclosure and the corresponding dosages.

Active Agent	**Dosage**
Hydrocortisone sodium succinate	50 mg/ml to 150 mg/ml
Certolizumab pegol	100 mg/ml to 300 mg/ml
Etanercept	10 mg/ml to 100 mg/ml
Risperidone	2.5 mg/ml to 200 mg/ml
Olanzapine pamoate	1 mg/ml to 200 mg/ml
Aripiprazole	100 mg/ml to 250 mg/ml

Human chorionic gonadotropin	250 IU/ml to 1000 IU/ml
Follicle-stimulating hormone	300 IU/ml to 1000 IU/ml
Gonadotropin releasing hormone analogs	10 mg/ml to 50 mg/ml
Azacitidine	10 mg/ml to 100 mg/ml
Metreleptin	1 mg/ml to 50 mg/ml
Various antivenoms including Apis mellifera, Dolichovespula maculata venom protein, Dolichovespula arenaria, Vespula vulgaris, Polistes Fuscatus, Dolichovespula maculata venom protein, Vespula vulgaris venom protein	0.001 mg/ml to 1mg/ml
Various antibiotics	Various based on patient weight and treatment
Romiplostim	0.1 mg/ml to 1 mg/ml
Pralidoxime chloride	100 mg/ml to 500 mg/ml
Ziprasidone mesylate	5 mg/ml to 10 mg/ml
Omacetaxine mepesuccinate	1 mg/ml to 50 mg/ml
Galcanezumab-gnlm	10 mg/ml to 200 mg/ml
Deferoxamine mesylate	50 mg/ml to 500 mg/ml
Methotrexate sodium	5 mg/ml to 100 mg/ml
Cosyntropin	0.1 mg/ml to 1 mg/ml
Peginterferon alfa-2b	0.1 mg/ml to 1 mg/ml
Bortezomib	0.1 mg/ml to 4 mg/ml
Canakinumab	25 mg/ml to 300 mg/ml
Rilonacept	30 mg/ml to 200 mg/ml
Tedglutide	1 mg/ml to 25 mg/ml

[00120] In some embodiments, the disclosed device is used for delivery of one or a plurality of active agents chosen from Table 1 into a subject. In some embodiments, the disclosed device is used for delivery of one or a plurality of active agents chosen from Table 1 in a dosage identified in Table 1 into a subject. In some embodiments, the disclosed device is used for delivery cortisone into a subject. In some embodiments, the disclosed device is used for delivery a cortisone derivative into a subject. In some embodiments, the disclosed device is used for delivery a hydrocortisone sodium succinate into a subject. In some embodiments, the one or plurality of active agents are delivered into a subject with the disclosed device in the presence of one or a plurality of pharmaceutically acceptable carriers. In some embodiments, the pharmaceutically acceptable carrier used is water for injection. In some embodiments, the pharmaceutically acceptable carrier used is sterile water for injection. In some embodiments, the pharmaceutically acceptable carrier used is bacteriostatic water for injection. In some embodiments, the pharmaceutically acceptable carrier used is sodium chloride in water. In some embodiments, the pharmaceutically acceptable carrier used is sodium bicarbonate in

water. In some embodiments, the pharmaceutically acceptable carrier used is dimethyl sulfoxide solutions in water.

Methods

[00121] The disclosure provides methods for treating and/or prevent a disease or disorder in a subject comprising administering one or a plurality of active agents by any of the devices disclosed herein. The disclosure further provides a method of treating a subject in need of administration of one or a plurality of active agents comprising administering a pharmaceutically effective amount of the one or plurality of active agents by any of the disclosed devices. In some embodiments, the subject is diagnosed with, or suspected of having, a cortisol disorder. A "cortisol disorder" as used herein refers to any disease or disorder that causes dysfunction of secretion of cortisol to abnormal levels. In some embodiments, the cortisol disorder is Addison's disease, Congenital adrenal hyperplasia, Autoimmune adrenalitis, Adrenalectomy, Adrenomyeloneuropathy, Adrenoleukodystrophy, Adrenal Tumors, Schmidt Syndrome, Hyperaldosteronism, Pituitary Tumors, Pituitary Cysts, or Critical-illness Related Corticosteroid Insufficiency. In some embodiments, the subject is diagnosed with, suspected of having, or is suffering cortisol depletion. In some embodiments, the cortisol depletion in the subject is caused by Addison's disease, Congenital adrenal hyperplasia, Autoimmune adrenalitis, Adrenalectomy, Adrenomyeloneuropathy, Adrenoleukodystrophy, Adrenal Tumors, Schmidt Syndrome, Hyperaldosteronism, Pituitary Tumors, Pituitary Cysts, or Critical-illness Related Corticosteroid Insufficiency.

[00122] Other than cortisone or cortisone derivatives, the disclosed devices can also be used to deliver other non-emergency active agents into a subject in need thereof for needed treatment. Examples of such non-emergency active agents include, but not limited to, non-emergency steroids, antibiotics, analgesics, disease specific treatments (e.g., MS treatments, psoriasis treatments), insulins, glycoproteins, immunomodulators, G-CSFs, erythropoietin (Epogen®, Procrit®), biologics, antihypertensives, vaccines, hormones (including birth control), anti-hormones, sedatives, antiepileptics, anti-neoplastics, insecticidal agents (e.g., dobutrex), anti-psychotics, detoxing agents, cosmetics, selective serotonin reuptake inhibitors (SSRIs), proton-pump inhibitors (PPIs), anesthetics, diuretics, anti-diuretics, blood thinners (e.g., low molecular heparin), streptokinase, and the like, alone or in combination, whether in a liquid form, reconstitutable form or otherwise. In some embodiments, the devices of the disclosure are used to deliver medications historically using the Act-o-vial® system, namely

Methylprednisolone for Multiple Sclerosis, certain cancers, and autoimmune conditions. In some embodiments, the devices of the disclosure are used to deliver Glucagon used in hypoglycemic emergencies. In some embodiments, the devices of the disclosure are used to deliver Ticarcillin used to treat high morbidity infections. In some embodiments, the devices of the disclosure are used to deliver Chlordiazepoxide used to treat alcohol withdrawal symptoms. In some embodiments, the devices of the disclosure are used to deliver Desoxycorticosterone pivalate used in veterinary emergencies. In some embodiments, the devices of the disclosure are used for in-vitro fertilization treatments.

[00123] The devices of the disclosure may be manufactured by any means known to one skilled in the relevant art, particularly in the field of auto-injectors. In some embodiments, the first, second, and third compartments are physically attached to the housing by friction fit, rivet, plug, or plastic welding such as radio frequency or ultrasonic welding. The compartments may also be attached to the housing or each other via the same techniques or through protrusions such as snap fittings. The components of the device can be plastic, rubber, glass, or metal. Most, if not all, sealing materials will be comprised of a plastic or rubber, whereas the chambers will be comprised of plastic, glass, or metal. The insertion rod will either be plastic or metal and attached to any seals through an interlocking mechanism based on groves for attachment, or attached through a screw-like threading. In embodiments with a moveable system attached to the insertion rod, the moveable system will be attached through frictional forces. Seals attached to the chamber will be press fit in place using frictional forces, attached through an interlocking grove system, or threaded into place. In some embodiments, the compartments are cylindrical or substantially cylindrical with protrusions on ends for fastening. In some embodiments, there may be 1 or more fasteners on each side of a compartment and each side of a device component.

[00124] Methods in accordance with aspects of the disclosure include, for instance, a method for using an apparatus for transportation, storage, mixture, and injection of a drug to a patient, wherein the apparatus comprises: a transportation assembly, a storage assembly, a mixture assembly, and an injection assembly, and wherein the method comprises providing the apparatus, engaging the mixture assembly to mix the drug and create a drug-in-solution in preparation to administer the drug to the patient, and engaging the injection assembly to inject the drug-in-solution into the patient. The method may further comprise disengaging a safety device prior to engaging the injection assembly to inject the drug-in-solution into the patient.

[00125] Further methods in accordance with aspects of the disclosure include, for instance, a method for assembling an apparatus for transportation, storage, mixture, and injection of a drug to a patient, wherein the apparatus comprises: a transportation assembly, a storage assembly, a mixture assembly, and an injection assembly, and wherein the method comprises: providing and assembling the transportation assembly; providing and assembling the storage assembly, providing and assembling the mixture assembly, and providing and assembling the injection assembly.

[00126] Systems in accordance with aspects of the disclosure include, for instance, a system for assembling an apparatus for transportation, storage, mixture, and injection of a drug to a patient, wherein the apparatus comprises: a transportation assembly, a storage assembly, a mixture assembly, and an injection assembly, and wherein the system comprises: means for assembling the transportation assembly; means for assembling the storage assembly, means for assembling the mixture assembly, and means for assembling the injection assembly.

[00127] Methods in accordance with aspects of the invention include, for instance, a method for using an apparatus for transportation, storage, mixture, and injection of a drug to a patient, wherein the apparatus comprises: a transportation assembly, a storage assembly, a mixture assembly, and an injection assembly, and wherein the method comprises providing the apparatus, engaging the mixture assembly to mix the drug and create a drug-in-solution in preparation to administer the drug to the patient, and engaging the injection assembly to inject the drug-in-solution into the patient. The method may further comprise disengaging a safety device prior to engaging the injection assembly to inject the drug-in-solution into the patient.

[00128] Further methods in accordance with aspects of the invention include, for instance, a method for assembling an apparatus for transportation, storage, mixture, and injection of a drug to a patient, wherein the apparatus comprises: a transportation assembly, a storage assembly, a mixture assembly, and an injection assembly, and wherein the method comprises: providing and assembling the transportation assembly; providing and assembling the storage assembly, providing and assembling the mixture assembly, and providing and assembling the injection assembly.

[00129] Systems in accordance with aspects of the invention include, for instance, a system for assembling an apparatus for transportation, storage, mixture, and injection of a drug to a patient, wherein the apparatus comprises: a transportation assembly, a storage assembly, a mixture assembly, and an injection assembly, and wherein the system comprises: means for

assembling the transportation assembly; means for assembling the storage assembly, means for assembling the mixture assembly, and means for assembling the injection assembly.

[00130] ***Methods of Making***

[00131] The device described herein consists of an active agent to be injected into the body and thus must be manufactured using sterile and aseptic techniques. General techniques for manufacturing include sterilization of device components, filling of active and carrier agents, assembly of active agent contacting components, and assembly of non-active agent contacting components. Filling of active agents and carrier agents, as well as assembly of some active agent contacting components, must be completed within an aseptic processing manufacturing facility, often referred to as an aseptic core.

[00132] Component sterilization techniques are well known in the art. Filling of agents depends on device characteristics and whether the active agent is a solid or liquid. Liquids can be filled through dispensing techniques using volumetric or flow measurements. Powders and other solids can be filled through insertion of the powder or solid material using density or weight based measurement systems for determining total fill amounts.

[00133] In one manufacturing method of this device, a chamber is capped at the distal end using a movable seal, and this capped chamber is then inserted into an aseptic core. Active agent is inserted into this chamber through either a powder filling method or liquid filling method. Liquids may or may not be lyophilized, depending on active agent type and device requirements. This filled chamber is then capped on the proximal end and inserted into the main device tube. The second agent is then filled onto the first chamber using either powder of liquid fill methods, an insertion rod is added, and the exposed end of the second filled chamber is sealed. The needle is added to the device, and the full subassembly is removed from the aseptic core. The remaining components are assembled onto the device outside the aseptic core.

[00134] In another manufacturing method, components are sterilized outside of the aseptic core. The needle assembly, movable seals and one chamber are inserted into the main device housing outside the aseptic core. This subassembly is then transferred into an aseptic core where active agent is inserted into the exposed chamber using liquid or powder filling methods. This chamber is capped, and the second active agent is added on top of the first, also using a liquid or powder filling method. An insertion rod and seal are added above the newly filled chamber and the assembly is removed from the aseptic core. Any final manufacturing assembly steps are completed and the device is packaged and labeled for distribution.

[00135] In another manufacturing method, the components are sterilized. The main device tube and needle are assembled and inserted into an aseptic core. A device chamber is sealed at the distal end with a moveable seal and placed into the same aseptic core. Active agent is inserted into the chamber using powder filling methods or liquid filling methods. If needed, the liquid is lyophilized. Once filling is complete, the chamber is sealed at the proximal end. The filled and sealed chamber is inserted into the main device tube. Liquid or powder is subsequently filled on top of the previous chamber. An insertion rod and seal are added above the newly filled chamber and the assembly is removed from the aseptic core. Any final manufacturing assembly steps are completed and the device is packaged and labeled for distribution.

[00136] In some embodiments, the first, second, and third compartments are physically attached to the housing by friction fit, rivet, plug, or plastic welding such as radio frequency or ultrasonic welding. The compartments may also be attached to the housing or each other via the same techniques or through protrusions such as snap fittings. The components of the device will be plastic, rubber, glass, or metal. In some embodiments, sealing materials will be comprised of a plastic or rubber, whereas the chambers will be comprised of plastic, glass, or metal. In some embodiments, the insertion rod will either be plastic or metal and attached to any seals through an interlocking mechanism based on groves for attachment, or attached through a screw-like threading. In some embodiments with a moveable system attached to the insertion rod, the moveable system will be operably attached through frictional forces. Seals attached to the chamber will be press fit in place using frictional forces, attached through an interlocking grove system, or threaded into place. In some embodiments the compartments are cylindrical or substantially cylindrical with protrusions on ends for fastening. In some embodiments there may be 1 or more fasteners on each side of a compartment and each side of a device component.

[00137] The foregoing description discloses exemplary embodiments of the invention. While the invention herein disclosed has been described by means of specific embodiments and applications thereof, numerous modifications and variations could be made thereto by those skilled in the art without departing from the scope of the invention set forth in the claims. Modifications of the above disclosed apparatus and methods that fall within the scope of the claimed invention will be readily apparent to those of ordinary skill in the art. Accordingly, other embodiments may fall within the spirit and scope of the claimed invention, as defined by the claims that follow hereafter.

[00138] The disclosure relates to a method of treating a subject in need thereof by administering one or a plurality of active agents in through use of the device. In some embodiments, the method of administering comprises depressing the movable element to a first predetermined position such that the insertion rod punctures the seal on the first opening separating the first and second compartments. In some embodiments, the method further comprises allowing a time to lapse to allow the active agent and diluent in the first and second compartments to mix and dissolve and/or activate the active agent. In some embodiments, the method further comprises a step of depressing the movable element a second sequential time after the first step of depressing to a second predetermined position, such that the insertion rod displaces or punctures the seal separating the second and third compartments. In some embodiments, the method further comprises a step of allowing a second period of time to elapse such that the active agent and pharmaceutically acceptable carrier or diluent contact the end of the needle. In some embodiments, the methods further comprise a step of depressing the movable element a third time to a fully depressed position, such that the spring of the needle assembly releases and deploys the distally facing end of the needle into the subject. In some embodiments, the methods further comprise unlocking the needle assembly before fully depressing the movable element. In some embodiments, the first predetermined distance is from about 1 cm to about 5 centimeters in movement toward the needle assembly. In some embodiment, the second predetermined distance is from about 1 cm to about 5 cm in movement toward the needle assembly. In some embodiments, the third predetermined distance is from about 2 centimeters to 6 centimeters.

[00139] In some embodiments, the methods of administration are free of a third depression of themovable element and final release of the spring of the need assembly is accomplished by simply applying pressure to the end of the device proximal to the needle assembly. In such cases, applying pressure to the device in the direction of the longitudinal axis by the subject or operator releases the spring and unsheaths the needle with a force that deploys the pharmaceutical composition into the subject.

[00140] The therapeutically effective amount or dosage of the compound can vary within wide limits. Such a dosage is adjusted to the individual requirements in each particular case including the specific compound(s) being administered, the route of administration, the condition being treated, as well as the patient being treated. In general, in the case of oral or parenteral administration to adult humans weighing approximately 70 Kg or more, a daily dosage of about 10 mg to about 10,000 mg, preferably from about 200 mg to about 1,000 mg,

should be appropriate, although the upper limit may be exceeded. The daily dosage can be administered as a single dose or in divided doses, or for parenteral administration, as a continuous infusion. Single dose compositions can contain such amounts or submultiples thereof of the compound or composition to make up the daily dose. The dosage can be adjusted by the individual physician in the event of any contraindications. Dosage can vary, and can be administered in one or more dose administrations daily, for one or several days.

[00141] In the description above, numerous specific details are set forth in order to provide a more thorough understanding of embodiments of the invention. It will be apparent, however, to an artisan of ordinary skill that the invention may be practiced without incorporating all aspects of the specific details described herein. Not all possible embodiments of the invention are set forth verbatim herein. A multitude of combinations of aspects of the invention may be formed to create varying embodiments that fall within the scope of the claims hereafter. In addition, specific details well known to those of ordinary skill in the art have not been described in detail so as not to obscure the invention. Readers should note that although examples of the invention are set forth herein, the claims, and the full scope of any equivalents, are what define the metes and bounds of the invention protection.

[00142] The foregoing description discloses exemplary embodiments of the disclosure. While the disclosure herein disclosed has been described by means of specific embodiments and applications thereof, numerous modifications and variations could be made thereto by those skilled in the art without departing from the scope of the disclosure set forth in the claims. Modifications of the above disclosed apparatus and methods that fall within the scope of the claimed subject matter will be readily apparent to those of ordinary skill in the art. Accordingly, other embodiments may fall within the spirit and scope of the claimed subject matter, as defined by the claims that follow hereafter.

[00143] In the description above, numerous specific details are set forth in order to provide a more thorough understanding of embodiments of the disclosure. It will be apparent, however, to an artisan of ordinary skill that the disclosure may be practiced without incorporating all aspects of the specific details described herein. Not all possible embodiments of the disclosure are set forth verbatim herein. A multitude of combinations of aspects of the disclosure may be formed to create varying embodiments that fall within the scope of the claims hereafter. In addition, specific details well known to those of ordinary skill in the art have not been described in detail so as not to obscure the disclosure. Readers should note that although examples of the

disclosure are set forth herein, the claims, and the full scope of any equivalents, are what define the metes and bounds of the protection.

CLAIMS

1. A device comprising:

(a) a first compartment and a second compartment, each of the first and second compartments defining a first and second cavity, respectively, separated by and in fluid communication with a first opening;

(b) a needle assembly; and

(c) an insertion rod positioned in the first compartment operably connected to a movable element,

wherein the first opening is covered by a seal.

2. The device of claim 1, wherein the insertion rod comprises two oppositely directed faces, the first face physically in contact with the movable element and the second face positioned within the first cavity; wherein the second face comprises a protrusion and at least one valve distally positioned from the protrusion.

3. The device of claim 2, wherein the protrusion has a beveled surface.

4. The device of claim 1, wherein the movable element is physically positioned adjacent to the insertion rod, and wherein the insertion rod is movable upon depression of the movable element toward a direction along a longitudinal axis parallel to and within the first compartment and second compartments.

5. The device of any of claims 1 through 4,

wherein the second compartment comprises an active agent and the first compartment comprises a pharmaceutically acceptable carrier; or

wherein the second compartment comprises a pharmaceutically acceptable carrier and the first compartment comprises an active agent; or

wherein both the first compartment and the second compartment each comprises one or a plurality of active agents.

6. The device of claim 5, wherein both the first compartment and the second compartment each comprises: one or a plurality of active agents and one or a plurality of pharmaceutically acceptable carriers.

7. The device of any of claims 1 through 6, wherein the second compartment comprises an active agent in solid or semisolid form; and wherein the first compartment comprises a pharmaceutically acceptable carrier in liquid form.

8. The device of any of claims 1 through 7, wherein the second compartment comprises an active agent in liquid form; and wherein the first compartment comprises a pharmaceutically acceptable carrier in liquid form.

9. The device of any of claims 5 through 8, wherein the active agent is lyophilized.

10. The device of any of claims 1 through 9 further comprising a third compartment defining a third cavity adjacent to and separated from the second compartment by a second opening covered by a second seal.

11. The device of claim 10, wherein the second seal is a movable plug in operable connection to the movable element and, whereupon depression of the movable element allows for displacement of the movable plug and fluid communication between the second and third compartments.

12. The device of claim 11, wherein depression of the movable element allows for displacement of the movable plug, insertion rod and fluid communication between the second and third compartments.

13. The device of any of claims 1 through 12, wherein the third compartment comprises the needle assembly; the needle assembly comprising a spring and a needle in operable connection to the spring; wherein the needle comprises a first fluid opening within the third cavity and an oppositely facing second fluid opening positioned away from the first and second cavities.

14. The device of any of claim 1 through 13, wherein the first and second fluid openings are covered by a movable seal in operable connection to the movable element, such that depression of the movable element to the first and second predetermined positions causes displacement of the first and second seals respectively.

15. The device of any of claims 1 through 14, wherein, in a first operable condition, the device comprises a first, second and third compartment, the first and second compartments in fluid communication with each other by a first opening comprising a first seal; the second and third compartments in fluid communication with each other by a second opening covered by a second seal; wherein the second compartment is positioned between the first and third compartments on opposite facing sides of the second compartment;

wherein the movable element is a fully extended position relative to the lateral orientation of the device, wherein the first compartment comprises a pharmaceutically acceptable carrier, the second compartment comprises one or a plurality of active agents, the third compartment comprises needle assembly, and wherein the first and second seals covering each of the first and second openings are fully intact preventing fluid flow from one compartment to another compartment.

16. The device of any of claims 1 through 14, wherein, in a second operable condition, the device comprises a first, second and third compartment, the first and second compartments in fluid communication with each other by a first opening; the second and third compartments in fluid communication with each other by a second opening covered by a second seal; wherein the second compartment is positioned between the first and third compartments on opposite facing sides of the second compartment;

wherein the movable element is in a partially depressed position relative to the lateral orientation of the device, wherein the first and second compartments comprises a pharmaceutically acceptable carrier and one or a plurality of active agents; wherein the third compartment comprises needle assembly, and wherein the second seal covers the second opening preventing fluid flow from the third compartment into the first or second compartments.

17. The device of any of claims 1 through 14, wherein, in a third operable condition, the device comprises a first, second and third compartment, the first, second and third

compartments are in fluid communication with each other; wherein the second compartment is positioned between the first and third compartments on opposite facing sides of the second compartment;

wherein the movable element is in a partially depressed position relative to the lateral orientation of the device such that the insertion rod has punctured the second seal, wherein the first, second and third compartments comprise a pharmaceutically acceptable carrier and one or a plurality of active agents; wherein the third compartment comprises the needle assembly, and wherein the second seal has been punctured or disposed from its position over the second opening and the needle assembly is exposed to the active agent and pharmaceutically acceptable carrier.

18. The device of any of claims 1 through 14, wherein, in a fourth operable condition, the device comprises a first, second and third compartment, the first, second and third compartments are in fluid communication with each other; wherein the second compartment is positioned between the first and third compartments on opposite facing sides of the second compartment;

wherein the movable element is in a fully depressed position relative to the lateral orientation of the device and the needle of the needle assembly is exposed.

19. The device of any of claims 16 through 18, wherein, the active agent is dissolved in one or a plurality of pharmaceutically acceptable carriers.

20. The device of any of claims 5 through 19, wherein the active agent is chosen from any one or combination of active agents from Table 1.

21. The device of claim 20, wherein the active agent is chosen from any one or combination of active agents from Table 1 in a dosage identified in Table 1.

22. The device of claim 20, wherein the active agent is a cortisone or cortisone derivative thereof.

23. The device of claim 22, wherein the cortisone derivative is hydrocortisone sodium succinate wherein the derivative is in a dosage of from about 50 mg to about 250 mg in weight

or from about 25 mg/mL to about 150 mg/mL in a weight to volume solution of active agent in pharmaceutically acceptable carrier.

24. The device of any of claims 1 through 23, wherein the first or the second compartment comprises a pharmaceutically acceptable carrier in fluid form with a viscosity of from about 1 cP to about 150 cP.

25. A method of treating and/or preventing a disease or disorder in a subject in need thereof comprising administering one or a plurality of active agents into the subject by the device of any of claims 1 through 24.

26. A method of treating a subject in need of administration of one or a plurality of active agents comprising administering a pharmaceutically effective amount of the one or plurality of active agents by the device of any of claims 1 through 24.

27. A method of treating cortisol depletion in a subject in need thereof comprising administering to the subject a cortisone or cortisone derivative thereof through the device of claims 1 through 24.

28. The method of claim 27, wherein the cortisol depletion is caused by Addison's disease, Congenital adrenal hyperplasia, Autoimmune adrenalitis, Adrenalectomy, Adrenomyeloneuropathy, Adrenoleukodystrophy, Adrenal Tumors, Schmidt Syndrome, Hyperaldosteronism, Pituitary Tumors, Pituitary Cysts, and/or Critical-illness Related Corticosteroid Insufficiency.

29. A method of treating a cortisol disorder in a subject in need thereof comprising administering to the subject a cortisol or cortisol derivative by use of the device of any of claims 1 through 24.

30. The method of claim 29, wherein the step of administering comprises:

depressing the movable element of the device of any of claims 1 through 24 to a first predetermined position, a second predetermined position and a third predetermined position;

wherein the device comprises: a first compartment, a second compartment and a third compartment, each of the first, second and third compartments defining a first, second and third cavity, respectively; the first and second compartments separated by and in fluid communication with a first opening, and the second and third compartments separated by and in fluid communication with a second opening; wherein each of the first opening is covered by a first seal and the second opening is covered by a second seal; wherein the third compartment comprises a needle assembly comprising a spring and a needle in operable connection to the spring;

wherein depressing the movable element to the first predetermined position causes the insertion rod to displace the first seal from the first opening and expose the first opening between the first and second compartment resulting in fluid communication between the first and second compartments; and

wherein depressing the movable element to the second predetermined position causes the insertion rod to displace the second seal from the second opening and expose the second opening between the second and third compartment resulting in fluid communication between the second and third compartments; and

wherein depressing the movable element to a third predetermined position causes ejection of the contents of the third compartment through the needle assembly.

31. The method of claim 30 further comprising a step of unlocking the needle assembly prior to depressing the movable element to the third predetermined position.

32. A method of treating congenital adrenal hyperplasia or Addison's disease in a subject in need thereof comprising administering to the subject a cortisone or cortisone derivative thereof through the device of any of claims 1 through 24.

33. A method of manufacturing the device of any of claims 1 through 24 comprising positioning the active agent or agents in a sterile or aseptic environment.

34. The method of claim 33 further comprising weighing the active agent or agents.

35. The method of claim 33 or 34 further comprising affixing the first and second compartments.

36. The method of claim 33, wherein the first and second compartments are attached in a sterilized environment by compression or screw into a fastener.

37. A method of administering an active agent to a subject in need thereof through the device of any of claims 1 through 24 comprising:

(a) depressing the movable element to a first predetermined position; and

(b) depressing the movable element to a second predetermined position;

wherein the first predetermined position creates displacement sufficient for the insertion rod to puncture the first seal, such that the first and second compartments are in fluid communication; and

wherein the second predetermined position creates a displacement sufficient to displace the movable seal, thereby allowing fluid communication between the second and third compartments.

38. The method of claim 37, wherein the second predetermined position creates a displacement sufficient to load the spring in the third compartment with a force from about 0 to about 100 Newtons.

39. A device comprising:

(a) a first compartment, a second compartment, and a third compartment, each of the first, second and third compartments defines a first, second and third cavity, respectively, and the second compartment is adjacently positioned between the first and third compartments;

(b) a needle guard assembly operably functional within and at least partially housed in the third cavity and comprising a needle operably attached to a spring; and

(c) an insertion rod positioned in the first compartment operably connected to a movable element, the insertion rod and movable element movable along a longitudinal axis of the first, second and third compartments;

wherein the first and second compartments are in fluid communication through a first opening; wherein the second and third compartments are in fluid communication through a second opening; the first opening covered by a first seal and the second opening covered by a second seal; and

(i) wherein the first compartment comprises one or a plurality of active agents; and the second compartment comprises one or a plurality of pharmaceutically acceptable carriers; or

(ii) wherein the first compartment comprises one or a plurality of pharmaceutically acceptable carriers; and the second compartment comprises one or a plurality of active agents.

40. The device of claim 39, wherein the first, second and third compartments are cylindrically aligned along the longitudinal axis of the cavities.

41. The device of claim 39 or 40, wherein the needle guard assembly comprises a spring, a needle sheath, and an interior surface comprising one or a plurality of track elements in operable connection to the needle, such track elements capable of guiding movement of the needle through the needle sheath after movement of the spring.

FIG. 1A

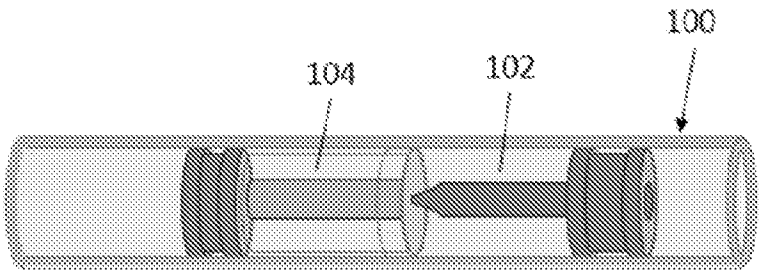

FIG. 1B

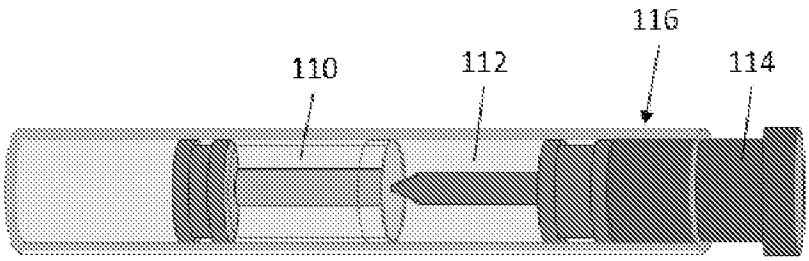

FIG. 2A

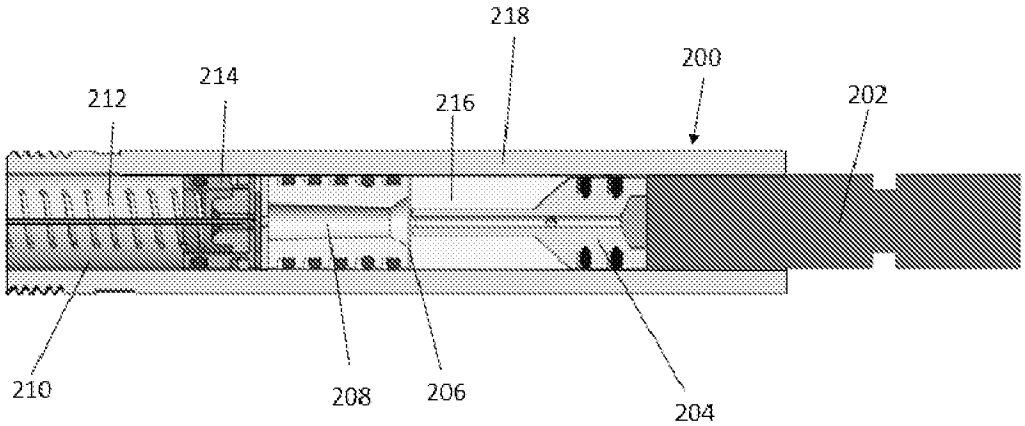
218
200
214
212
216
202
210
208
206
204

FIG. 2B

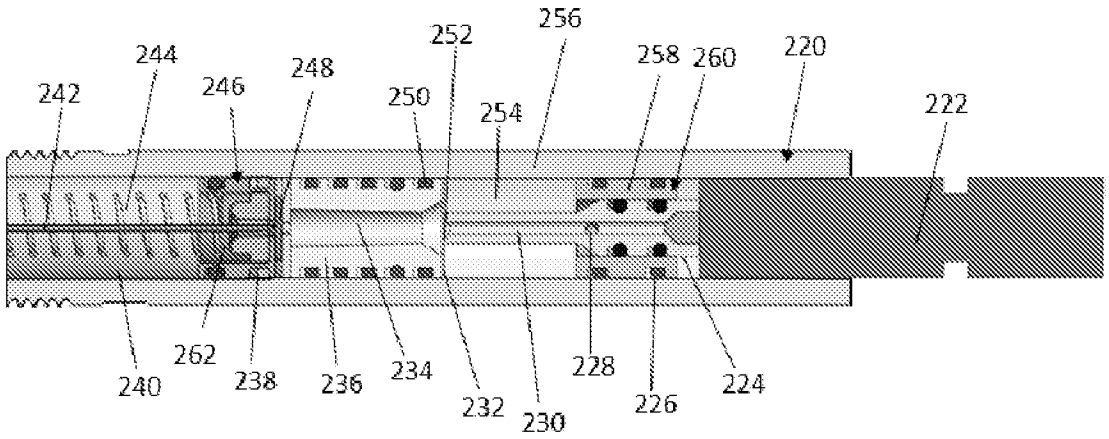
252
256
244
258
260
220
248
242
246
250
254
222
262
238
236
234
232
230
228
226
224
240

FIG. 3A

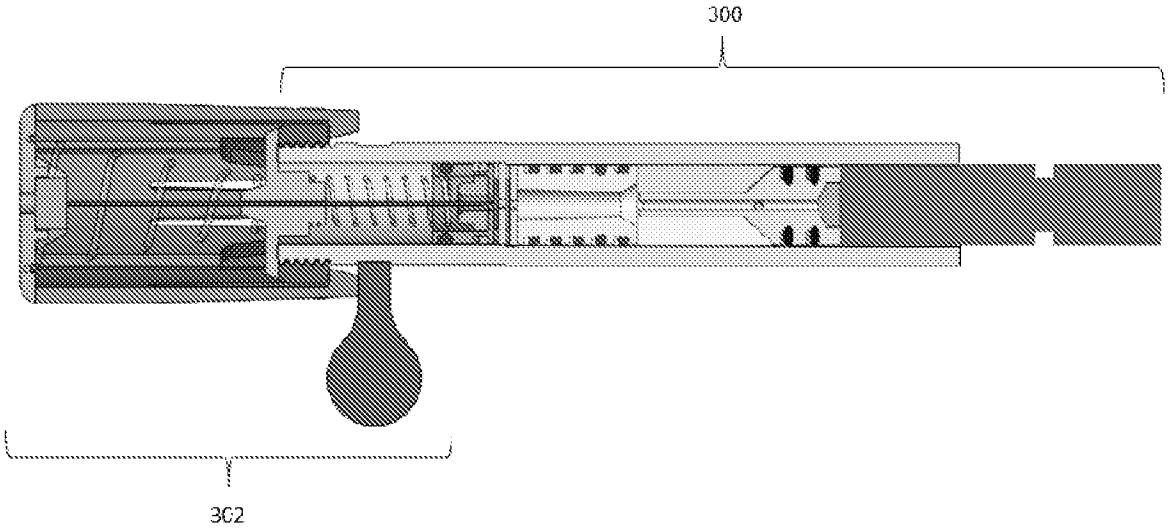

FIG. 3B

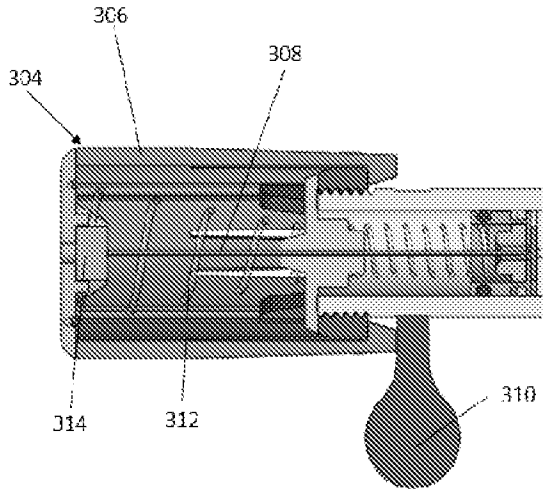

FIG. 3C

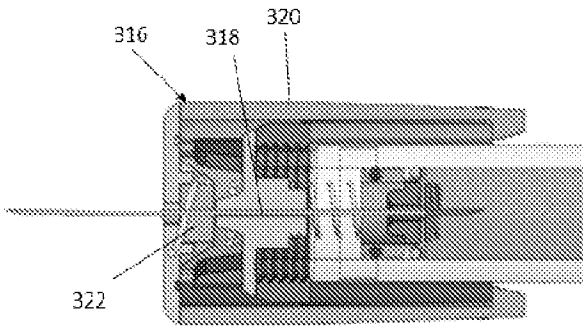

FIG. 3D

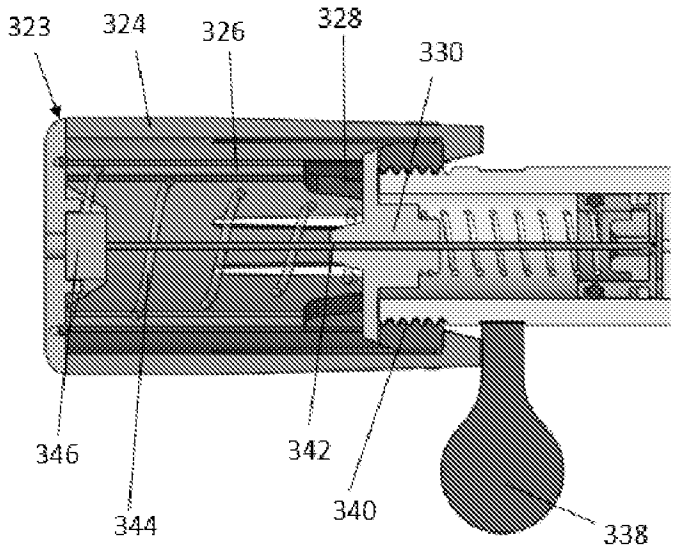

FIG. 3E

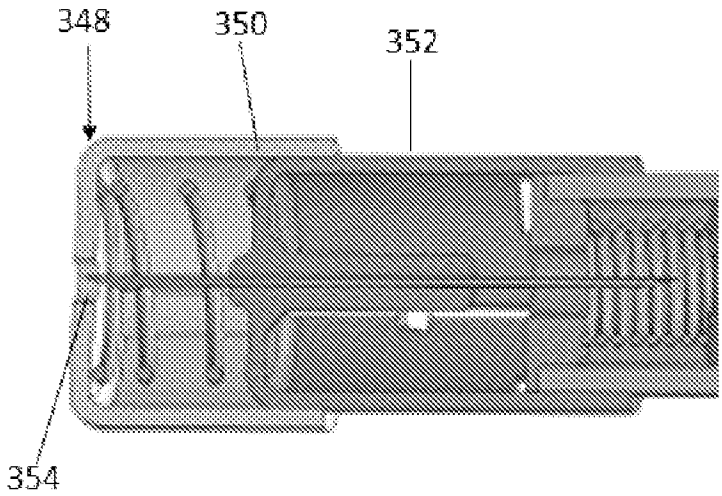

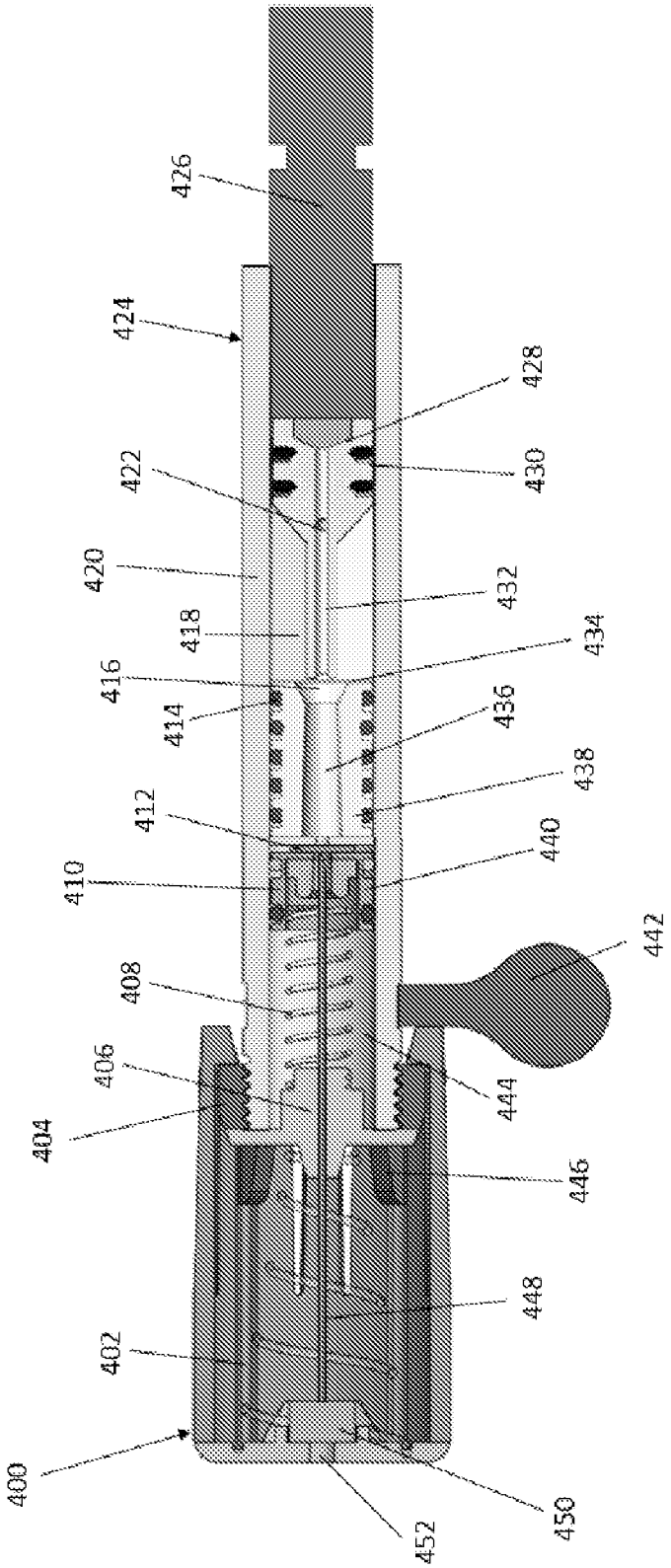
426
424
428
422
430
420
432
418
434
416
436
414
438
412
440
410
442
408
406
444
404
446
448
402
400
452
450

FIG. 4

FIG. 5A

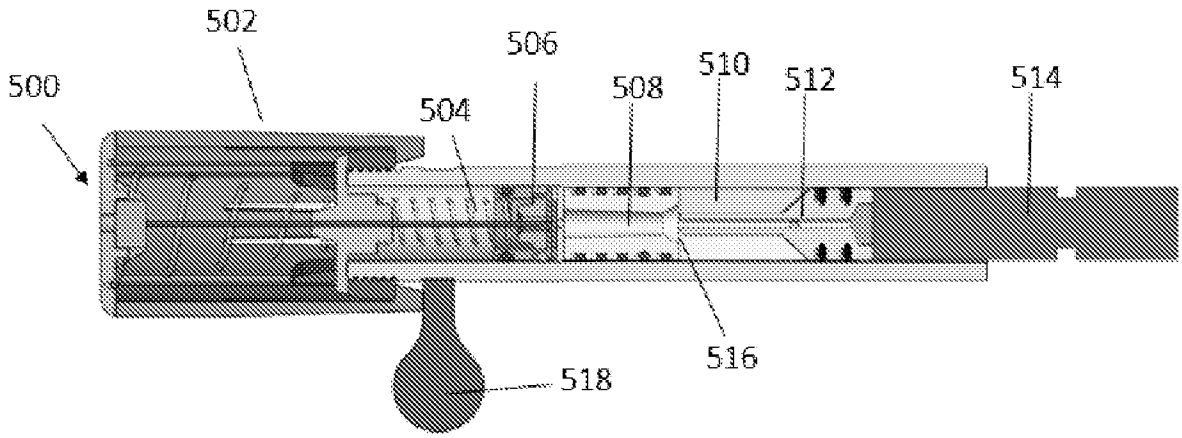

FIG. 5B

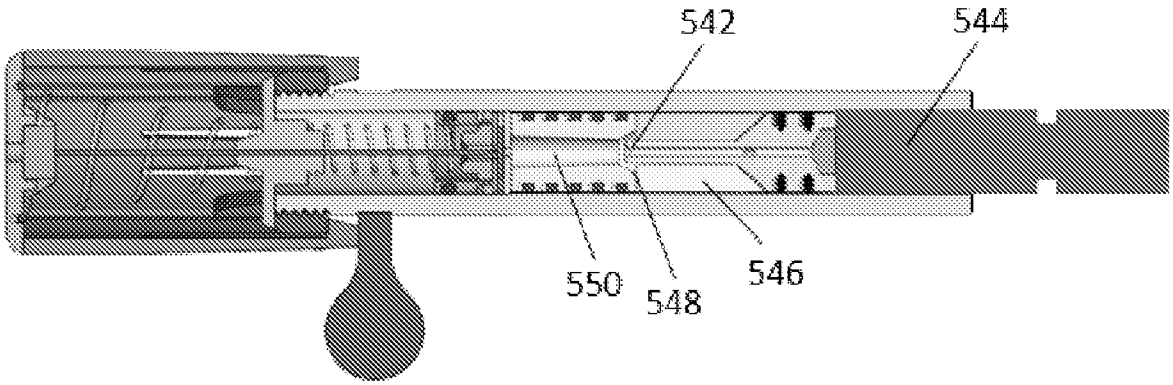

FIG. 5C

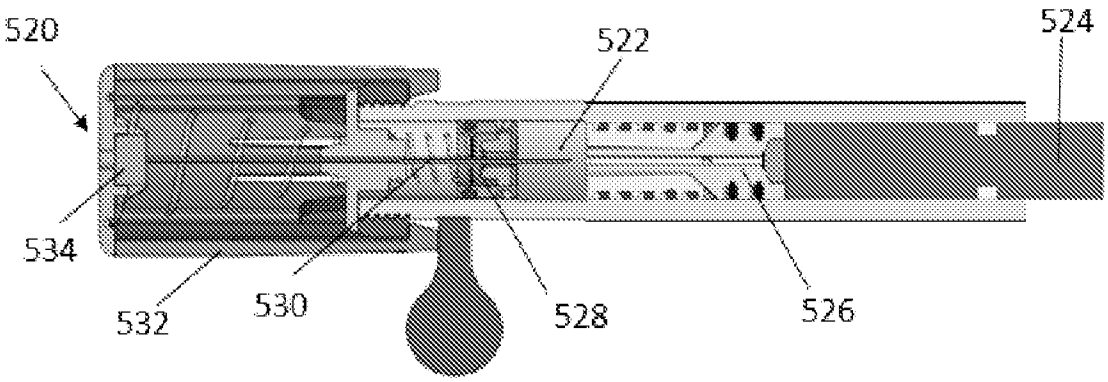

FIG. 5D

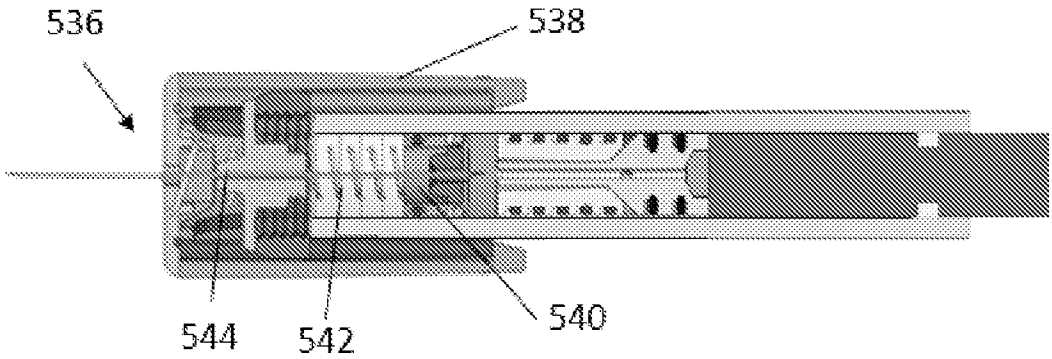

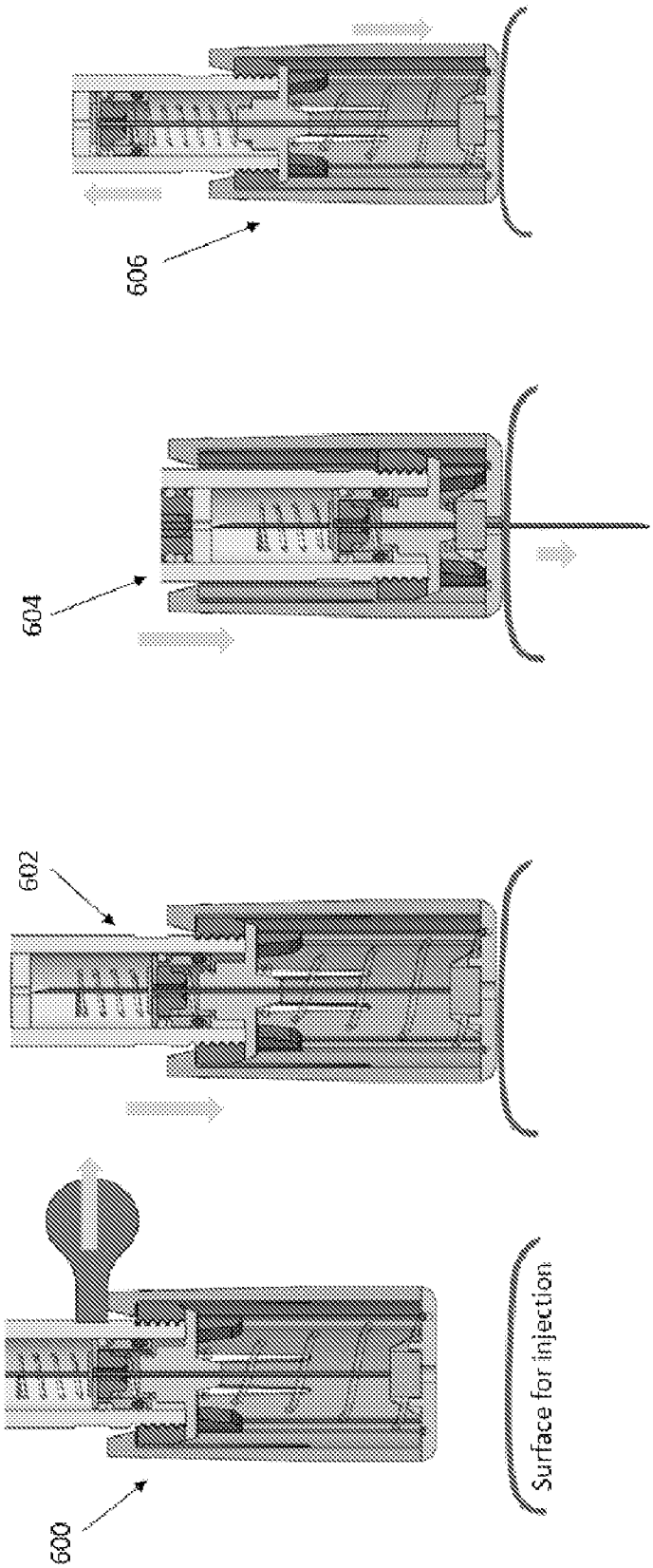

FIG. 6

FIG. 7

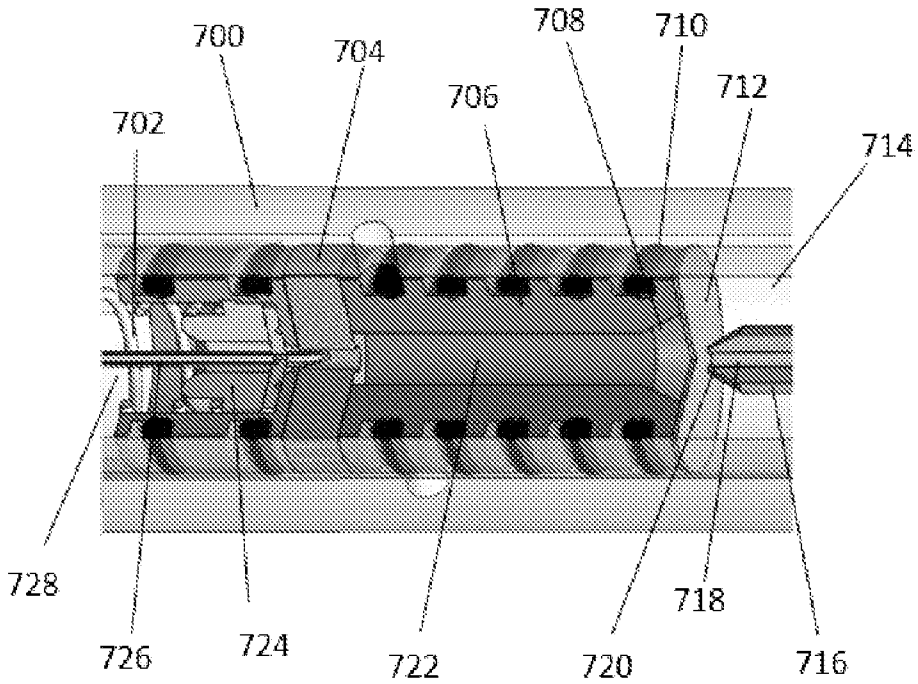
700
704
708
710
712
702
706
714
728
726
724
722
720
718
716

FIG. 8

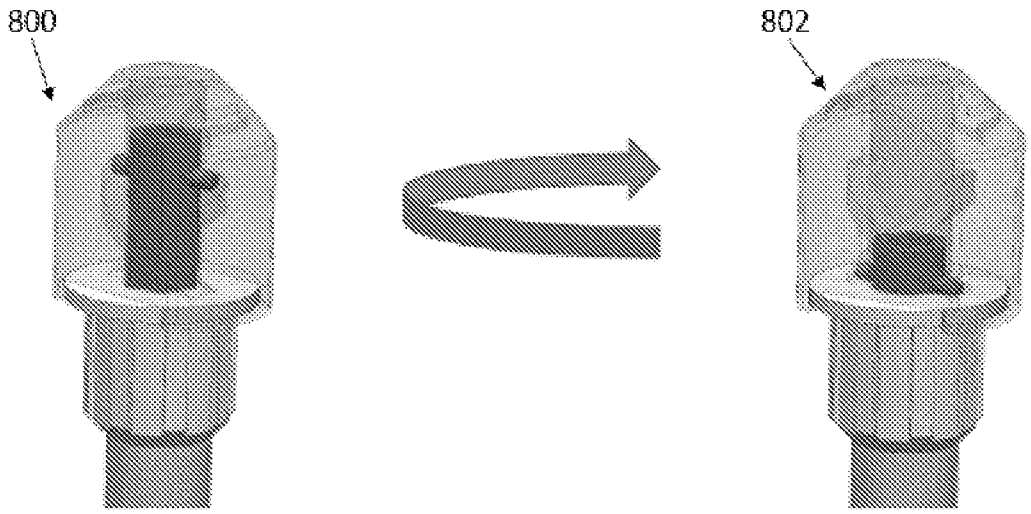
800
802

INTERNATIONAL SEARCH REPORT

International application No.
PCT/US2021/020123

A. CLASSIFICATION OF SUBJECT MATTER

IPC(8) - A61M 5/19; A61M 5/31; A61M 5/315; A61M 5/32 (2021.01)

CPC - A61M 5/19; A61M 5/2066; A61M 5/31596; A61M 5/326; A61M 2005/31598; A61M 2005/3267 (2021.05)

According to International Patent Classification (IPC) or to both national classification and IPC

B. FIELDS SEARCHED

Minimum documentation searched (classification system followed by classification symbols)

see Search History document

Documentation searched other than minimum documentation to the extent that such documents are included in the fields searched

see Search History document

Electronic data base consulted during the international search (name of data base and, where practicable, search terms used)

see Search History document

C. DOCUMENTS CONSIDERED TO BE RELEVANT

Category*	Citation of document, with indication, where appropriate, of the relevant passages	Relevant to claim No.
X	US 2008/0171971 A1 (DIPERNA et al) 17 July 2008 (17.07.2008) entire document	1, 4-6
—		—
Y		2, 3
Y	US 2005/0177100 A1 (HARPER et al) 11 August 2005 (11.08.2005) entire document	2, 3
A	WO 2009/103251 A1 (VAKOS XT A.S.) 27 August 2009 (27.08.2009) entire document	1-6, 39-41
A	US 2018/0085531 A1 (ANTARES PHARMA, INC.) 29 March 2018 (29.03.2018) entire document	1-6, 39-41
A	US 4,643,721 A (BRUNET) 17 February 1987 (17.02.1987) entire document	1-6, 39-41

☐ Further documents are listed in the continuation of Box C. ☐ See patent family annex.

* Special categories of cited documents:

"A" document defining the general state of the art which is not considered to be of particular relevance

"D" document cited by the applicant in the international application

"E" earlier application or patent but published on or after the international filing date

"L" document which may throw doubts on priority claim(s) or which is cited to establish the publication date of another citation or other special reason (as specified)

"O" document referring to an oral disclosure, use, exhibition or other means

"P" document published prior to the international filing date but later than the priority date claimed

"T" later document published after the international filing date or priority date and not in conflict with the application but cited to understand the principle or theory underlying the invention

"X" document of particular relevance; the claimed invention cannot be considered novel or cannot be considered to involve an inventive step when the document is taken alone

"Y" document of particular relevance; the claimed invention cannot be considered to involve an inventive step when the document is combined with one or more other such documents, such combination being obvious to a person skilled in the art

"&" document member of the same patent family

Date of the actual completion of the international search	Date of mailing of the international search report
04 May 2021	MAY 25 2021
Name and mailing address of the ISA/US Mail Stop PCT, Attn: ISA/US, Commissioner for Patents P.O. Box 1450, Alexandria, VA 22313-1450 Facsimile No. 571-273-8300	Authorized officer Blaine R. Copenheaver Telephone No. PCT Helpdesk: 571-272-4300

INTERNATIONAL SEARCH REPORT

International application No.
PCT/US2021/020123

Box No. II Observations where certain claims were found unsearchable (Continuation of item 2 of first sheet)

This international search report has not been established in respect of certain claims under Article 17(2)(a) for the following reasons:

1. ☐ Claims Nos.:
because they relate to subject matter not required to be searched by this Authority, namely:

2. ☐ Claims Nos.:
because they relate to parts of the international application that do not comply with the prescribed requirements to such an extent that no meaningful international search can be carried out, specifically:

3. ☒ Claims Nos.: 7-38
because they are dependent claims and are not drafted in accordance with the second and third sentences of Rule 6.4(a).

Box No. III Observations where unity of invention is lacking (Continuation of item 3 of first sheet)

This International Searching Authority found multiple inventions in this international application, as follows:

1. ☐ As all required additional search fees were timely paid by the applicant, this international search report covers all searchable claims.

2. ☐ As all searchable claims could be searched without effort justifying additional fees, this Authority did not invite payment of additional fees.

3. ☐ As only some of the required additional search fees were timely paid by the applicant, this international search report covers only those claims for which fees were paid, specifically claims Nos.:

4. ☐ No required additional search fees were timely paid by the applicant. Consequently, this international search report is restricted to the invention first mentioned in the claims; it is covered by claims Nos.:

Remark on Protest

☐ The additional search fees were accompanied by the applicant's protest and, where applicable, the payment of a protest fee.

☐ The additional search fees were accompanied by the applicant's protest but the applicable protest fee was not paid within the time limit specified in the invitation.

☐ No protest accompanied the payment of additional search fees.