May 22, 1951 G. OLA 2,553,933

LATERALLY EXPANDABLE SHOE TREE

Filed Sept. 6, 1949

Fig. 1

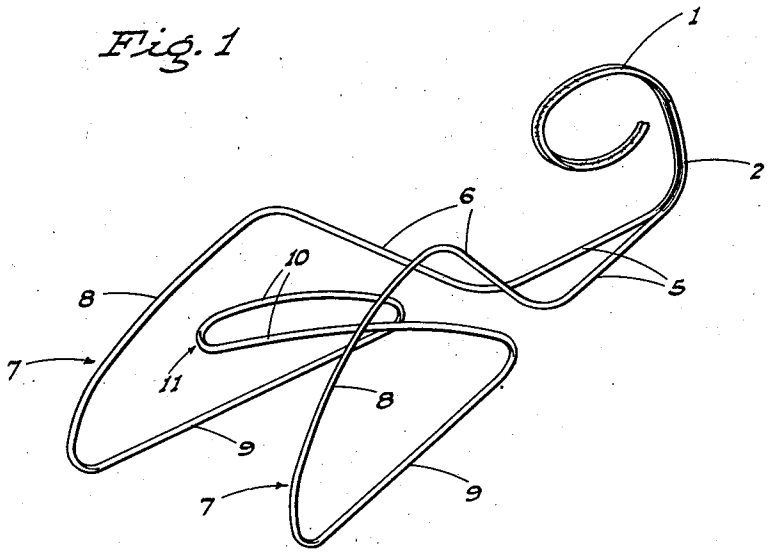

Fig. 2

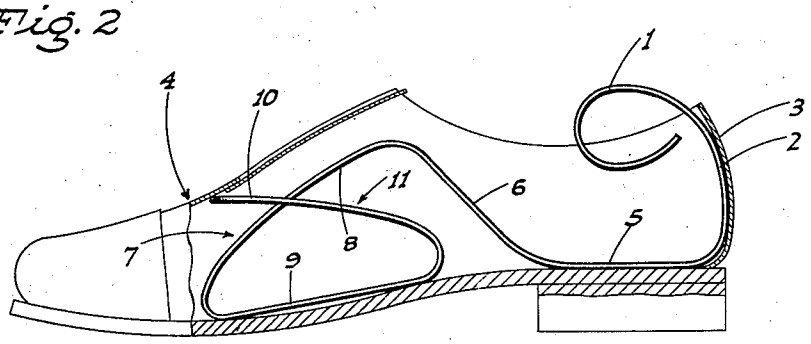

Inventor

Gerardo Ola

By

Webster & Webster

ATTORNEYS

Patented May 22, 1951 2,553,933

UNITED STATES PATENT OFFICE

2,553,933

LATERALLY EXPANDIBLE SHOE TREE

Gerardo Ola, Stockton, Calif.

Application September 6, 1949, Serial No. 114,202

2 Claims. (Cl. 12—128.4)

1

This invention is directed to, and it is an object to provide, a novel shoe tree; the device being designed for ease and economy of manufacture.

Another object of the invention is to provide a shoe tree which is constructed of a single length of spring wire; the resiliency of the several portions of the device being effective to prevent wrinkling of the shoe in which the device is in use.

An additional object of the invention is to provide a shoe tree which is simple in structure, light weight, and readily manipulated for use.

A further object of the invention is to provide a shoe tree which, when in use, imparts and maintains longitudinal, transverse, and vertical pressures within the shoe so as to assure of best results in holding the shoe in a non-wrinkled condition.

A further object of the invention is to provide a practical and reliable shoe tree, and one which will be exceedingly effective for the purpose for which it is designed.

These objects are accomplished by means of such structure and relative arrangement of parts as will fully appear by a perusal of the following specification and claims.

In the drawings:

Fig. 1 is a perspective view of the shoe tree.

Fig. 2 is a sectional elevation of the shoe tree as in use in a shoe.

Referring now more particularly to the characters of reference on the drawings, the novel shoe tree is made from a single length of spring wire of a relatively heavy gauge; such length of wire being formed as follows:

The free end portions of the length of wire are secured together, as by spot welding, for a predetermined distance, and as so secured together are shaped into a forwardly projecting finger eye 1 at the upper end of an upstanding rear shank 2; such rear shank 2 being curved, as shown in Fig. 2, to substantially matchingly engage in the heel part 3 of a shoe, indicated generally at 4.

From the lower end of the upstanding rear shank 2 the separate runs of the wire extend forwardly in diverging relation as longitudinal connectors 5, having forward end portions which are inclined upwardly, as at 6.

Ahead of the inclined portions 6, the separate runs of the wire are bent to form forwardly projecting loops which define substantially vertical side wings, indicated generally at 7; each such side wing including an upper leg 8 and a lower leg 9. Each upper leg 8 merges at its rear end with the upper end of the corresponding portion 6 and thence inclines forwardly and downwardly to

2

connection with the forward end of the related lower leg 9.

There is a continuing divergence from the longitudinal connectors 5 through the inclined portions 6 and side wings 7 whereby the latter, in an initial position, are relatively widely separated.

The loop of the wire which remains between the rear ends of the lower legs 9, including transversely spaced, upwardly and forwardly converging legs 10, forms a tongue 11 which extends forwardly and upwardly centrally between the side wings 7, projecting to a point above the front ends of said wings and some distance ahead of the upper legs 10 intermediate the ends of the latter.

When the above described shoe tree is placed in a shoe, as shown in Fig. 2, with the upstanding rear shank 2 bearing against the heel part 3, as previously described, the longitudinal connectors 5 lie on the pad of the heel, as shown in Fig. 2.

The side wings 7 engage in the shoe ahead of the heel under considerable lateral tension; i. e. bear outwardly against the sides of the shoe with substantial pressure. At the same time the tongue 11 rides the top of the shoe, likewise under tension, so as to urge the top of the shoe upwardly.

Additionally, the longitudinal connectors 5, including the inclined portions 6, are of sufficient length with respect to the shoe size to maintain the shoe tree, when in place, under longitudinal compression so as to assure that said shoe tree acts effectively to prevent wrinkling of the shoe. In other words, the upstanding rear shank 2 and side wings 7 are urged in a longitudinally separating direction without interfering with the laterally outward pressure and upward pressure which said side wings 7 and tongue 11 exert on said shoe.

The described shoe tree is thus effective to maintain a shoe in non-wrinkled condition; the shoe tree being light in weight and easy to manipulate.

By reason of the simple design of the shoe tree, and the fact that it can be constructed from a single length of wire, manufacturing can be accomplished in an easy and economical manner.

From the foregoing description it will be readily seen that there has been produced such a device as substantially fulfills the objects of the invention, as set forth herein.

While this specification sets forth in detail the present and preferred consruction of the device, still in practice such deviations from such detail may be resorted to as do not form a departure

from the spirit of the invention, as defined by the appended claims.

Having thus described the invention, the following is claimed as new and useful, and upon which Letters Patent are desired:

1. A shoe tree comprising, of spring wire, an upstanding rear shank, connectors projecting forwardly in diverging relation from the lower end of the shank, said connectors including upwardly and forwardly inclined front portions, forwardly diverging, rearwardly opening loops ahead of and corresponding to the connectors, each loop including an upper leg and a lower leg and forming a substantially vertical side wing, the rear ends of the upper legs merging with the upper ends of said inclined front portions of the connectors, and a forwardly and upwardly inclined, rearwardly opening loop projecting forwardly from between the side wings as a tongue which extends to a termination above the front end of said wings, said tongue-forming loop including transversely spaced legs merging at their rear ends with the corresponding ends of said lower legs of the side wing loops.

2. A shoe tree comprising a length of spring wire,

the wire adjacent its ends being bound together in side by side relation and shaped to form a first portion to conform to the inside of a shoe heel, the wire then projecting divergently outward from the lower end of the first portion to form a second portion to lie flat on the heel pad of the shoe, the diverging wires then being bent upwardly and outwardly from said last named portion and then downwardly and rearwardly to form third portions comprising wings shaped to engage the sides of the vamp and the adjacent portion of the sole of the shoe, the wire then being bent and inclining upwardly and forwardly to form a final portion shaped to engage the top of the vamp of the shoe.

GERARDO OLA.

REFERENCES CITED

The following references are of record in the file of this patent:

UNITED STATES PATENTS

Number	Name	Date
2,111,669	Lazarus	Mar. 22, 1938
2,408,545	Barber	Oct. 1, 1946