March 2, 1926. 1,575,021

P. VAN VLISSINGEN

FILING DEVICE

Filed Oct. 10, 1923

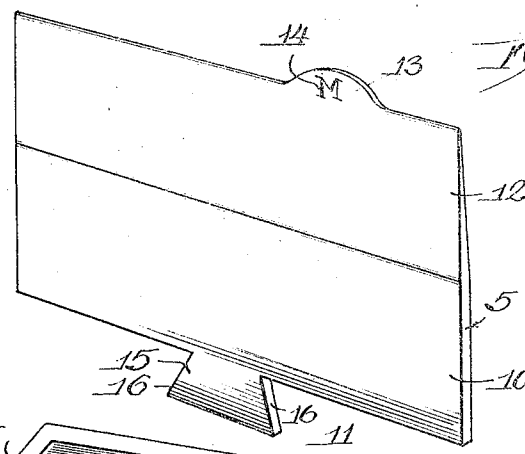

Fig. 1

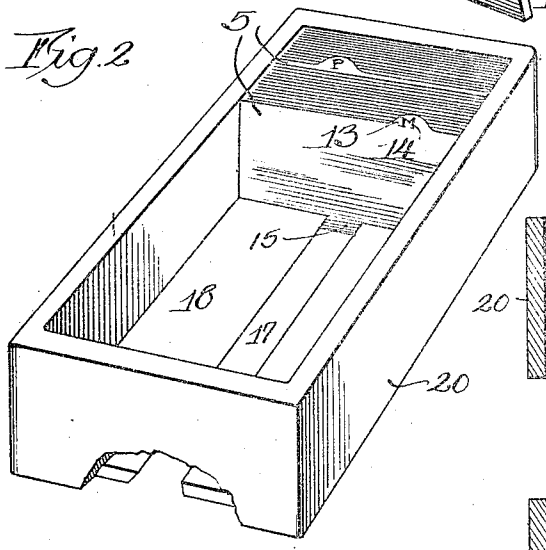

Fig. 2

Fig. 3

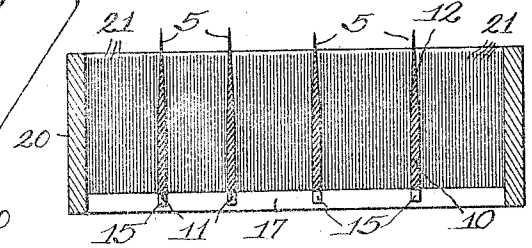

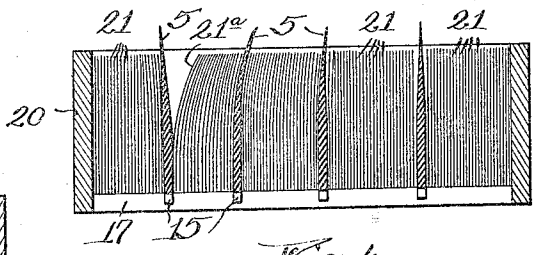

Fig. 4

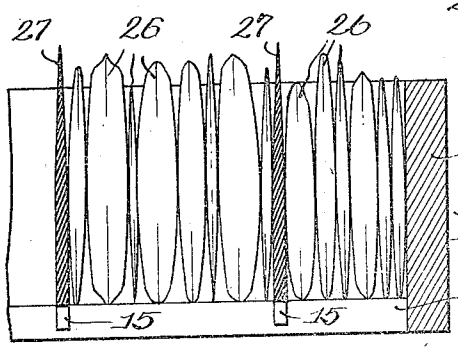

Fig. 5

Witness:
Chas. K. Fourse.

Inventor,
Peter Van Vlissingen,
By Offield Bubbley Poole & Deott Attys.

Patented Mar. 2, 1926. 1,575,021

UNITED STATES PATENT OFFICE.

PETER VAN VLISSINGEN, OF CHICAGO, ILLINOIS, ASSIGNOR TO SYCO SYSTEMS COMPANY, OF CHICAGO, ILLINOIS, A CORPORATION OF ILLINOIS.

FILING DEVICE.

Application filed October 10, 1923. Serial No. 667,733.

To all whom it may concern:

Be it known that I, PETER VAN VLISSINGEN, a citizen of the United States, and a resident of Chicago, in the county of Cook and State of Illinois, have invented certain new and useful Improvements in Filing Devices, of which the following is a specification.

This invention relates to improvements in filing devices and more particularly to spacing cards or index guides used in filing cases or the like.

The principal object of my invention is to provide a novel construction of devices of the character described, which affords improved facility in the filing of cards, papers or the like; and further, to provide spacing devices readily insertable or removable from the case, and adapted to assist in anchoring or retaining bulky files or the like when tightly packed in the case. Other objects of my invention will appear from time to time as the description proceeds.

My invention may best be understood by reference to the accompanying drawings, illustrating preferred embodiments thereof. In the drawings,

Fig. 1 is a view in perspective of a guide card or spacer constructed in accordance with my invention.

Fig. 2 is a view in perspective of a typical filing case partially filled with material, together with a plurality of my improved guide cards or spacers, and showing a portion of the case broken away.

Fig. 3 is a view in longitudinal cross section of a typical filing case with the spacer cards in position and filled with cards.

Fig. 4 is a view similar to Fig. 3, but with certain of the spacer cards and adjacent material tilted rearwardly to illustrate the ready accessibility to the filed material afforded by the novel shape of the guide cards.

Fig. 5 is a fragmentary view of another case used for filing bulky files or packages of papers, in which instance my improved spacers serve to retain or anchor the material in the case.

Referring to details of the drawings, one form of my improved form of spacer or guide card 5 is shown in Fig. 1 and comprises a body portion 10, having a relatively thick base 11, and a relatively thin upper portion 12. On the form shown, the body portion is tapered from about the middle to to top for the purpose to be hereinafter described.

The spacer is preferably made of a flexible or pliable material such as soft rubber or a similar composition, having sufficient elasticity to withstand frequent bending.

The spacers, when used as a guide card, are provided with a series of guide tabs 13, 13, arranged at suitable positions at the top margin of the body portion, and bearing guide indicia 14, 14 in the usual manner.

In my improved construction I propose to form these tabs of pliable material integral with the body of the card or spacer 10, whereby the cards may be readily manipulated and handled by operators during the use of the filing case without injury to the fingers.

The spacer is adapted to be inserted and secured in the case by means of a wedge-shaped tongue or projection 15, preferably formed integral with the body. This tongue is provided with diverging lateral margins 16, 16 so as to be wider at the bottom than at the top, and has fitting engagement in a longitudinally disposed slot 17, formed in the bottom of the filing case 18. The walls of the slot are preferably inclined to receive the projection 15 as shown in Fig. 2.

The spacers may be readily inserted in or removed from the case by turning the spacers at an oblique angle to the slot 17, and thus disengaging the projection, provided there is sufficient room in the case. Under many conditions, however, the case is partially filled with material making it impractical to manipulate the spacer in this manner. With the pliable or flexible composition described, however, I make it possible to bend the card at the center in alignment with the lateral margins 16, 16 of the tongue 15, sufficiently to insert or remove the tongue from engagement with the slot, with only a minimum of displacement of adjacent material in the case.

One application of my improved form of spacer devices is illustrated in Figs. 2 and 3, in which a filing case 20, is filled with a plurality of indexed cards 21, and in which a plurality of spacers 5, 5, are inserted at suitable intervals to serve as index guides. It will be noted that the cards 21 are closely packed in the case, and when standing normally as in Fig. 3, they are all substantially upright. When it is desired to refer to a certain card 21ª, however, the material in the case can be parted or opened at any desired point, as shown in Fig. 4 regardless of how tightly the material is packed in the case. This is due to the shape of my improved spacer cards 5, which are thicker at the base, than at the top, so that the aggregate difference in thickness between bottom and top of all of said spacers permits the material to be parted sufficiently at the top for ready reference thereto, although such material is still closely confined at the bottom of the case, and the latter is packed to maximum capacity.

I find it desirable to make the base portion 11 of uniform thickness for a substantial proportion of the total height of the spacer, before the tapered portion 12 begins. In the preferred form said portion extends about one half the height of the cord although it is obvious that the relative proportions may be varied somewhat in either direction without materially affecting the desired results. This arrangement affords an even pressure upon the lower part of the material to retain it in the case, and yet permits the upper portion of the material to be parted or bent together with the pliable spacers 5, 5 as shown.

Another application of the spacer devices is illustrated in Fig. 5, which represents a portion or section of a relatively long case 25, in which are packed a plurality of bulky files 26, such as may be formed by folding many attached sheets of paper together to form a package thicker at its center than at the margins thereof, as shown. It is common knowledge that such bulky papers have a tendency to bulge upwardly in the case when packed tightly in large numbers. This is especially troublesome when filing in sliding drawers, in which case the papers often become displaced while the drawer is being opened or closed. By providing a plurality of my improved spacer devices positioned at suitable intervals in such a case or drawer, the papers or files 26, may be tightly packed therein as shown in Fig. 5 and yet will be engaged by friction between adjacent spacers 27 constructed in accordance with my invention so that said files cannot become displaced inasmuch as said spacers are anchored in the case by means of the wedge-shaped projections 15, 15, engaging in slot 17, in the same manner as heretofore described. In addition to their function as anchoring or retaining devices, the spacers may also be used as index guides.

Although I have shown and described one form in which my invention may be embodied, it will be understood that many changes in form and construction will occur to those skilled in the art without departing from the spirit and scope of my invention. I do not therefore wish to be understood as limiting myself to the construction shown and described herein, excepting in so far as specifically defined in the appended claims.

I claim:

1. A spacing device for filing cases or the like consisting of a soft rubber.

2. A guide card comprising a body and an integral projecting guide tab for indicia, consisting of a sheet of soft rubber.

3. A pliable and flexible spacing device for filing cases or the like having a body portion thicker adjacent its base than adjacent its upper margin.

4. A pliable and flexible spacing device for filing cases or the like comprising a base portion of substantially uniform thickness, and an upper portion tapered upwardly in cross section from said base portion.

5. A spacing device for filing cases or the like comprising a base portion of substantially uniform thickness, and an upper portion tapered upwardly in cross section from said base portion and consisting of pliable and flexible material.

6. A spacing device for filing cases or the like, consisting of a pliable and flexible material, and having a projection at its lower margin provided with interlocking lateral margins adapted for engagement between coacting surfaces of the filing case.

7. A spacing device for filing cases or the like consisting of a pliable and flexible material, and having a projection at its lower margin provided with interlocking lateral margins adapted for engagement between coacting surfaces of the filing case and releasable therefrom by flexing of said spacing device.

8. In filing apparatus, a case having a longitudinally disposed slot, a plurality of spacing devices each consisting of a pliable and flexible material and provided with a centrally disposed projection at its lower margin having divergent lateral margins adapted to be normally retained in sliding engagement in said longitudinally disposed slot.

9. In filing apparatus, a case having a longitudinally disposed slot, a plurality of pliable and flexible spacing devices each comprising a relatively thick base and a relatively thin upper portion, and provided with a centrally disposed projection at its lower margin having divergent lateral margins adapted to be normally retained in

sliding engagement in said longitudinally disposed slot.

10. In filing apparatus, a case, a plurality of spacing devices each consisting of pliable and flexible material, comprising a relatively thick base portion of substantially uniform thickness extending substantially one half the height of said spacing device, and an upper portion tapering upwardly in cross section from said base portion, and means for retaining said spacing devices in said case.

In witness whereof, I hereunto subscribe my name this 8th day of October, A. D., 1923.

PETER VAN VLISSINGEN.