Dec. 22, 1964 H. B. WARZECKA 3,162,503

ELECTRICAL CONNECTORS

Filed Aug. 16, 1962

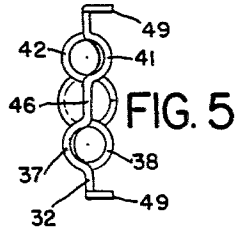

FIG. 5

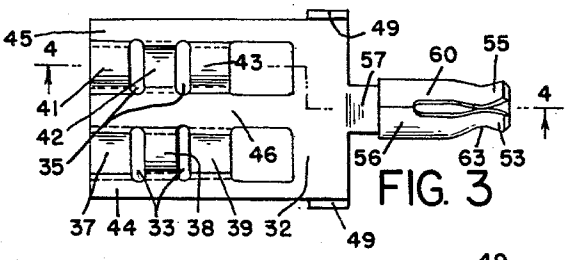

FIG. 3

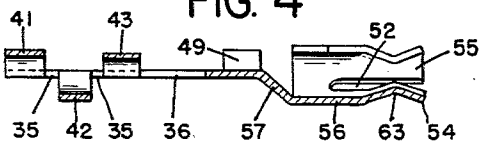

FIG. 4

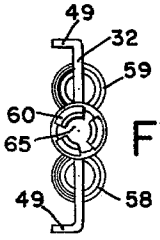

FIG. 6

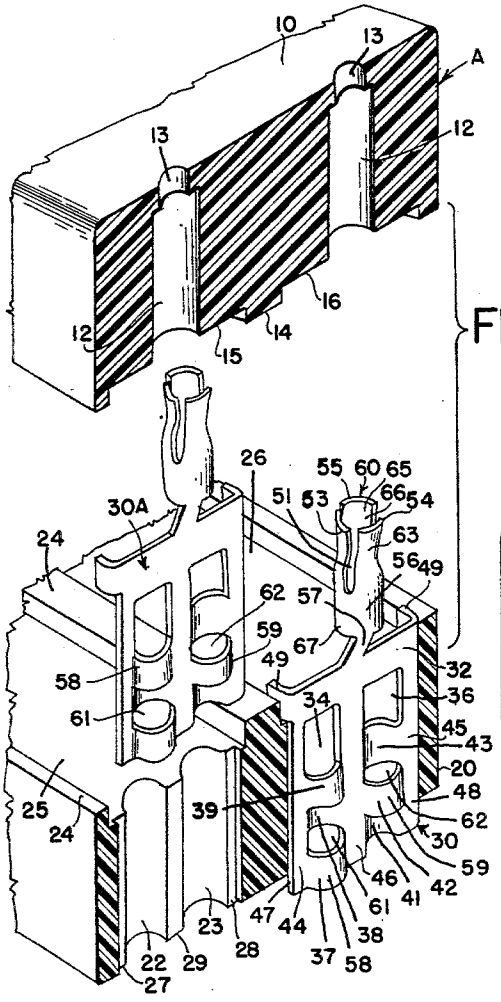

FIG. 7

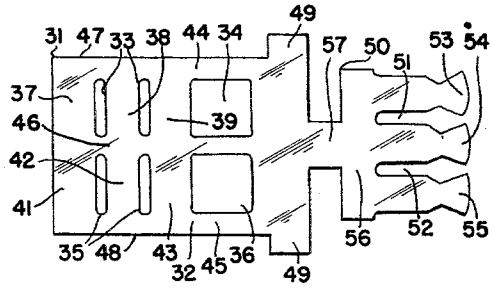

FIG. 2

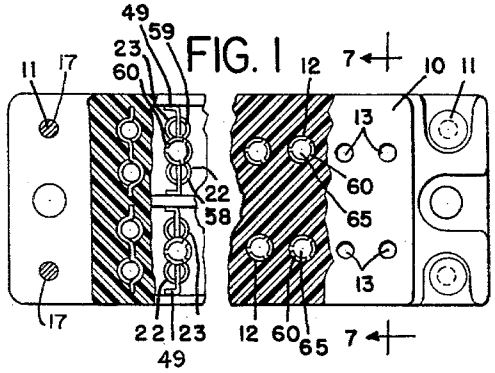

FIG. 1

INVENTOR.

HERBERT B. WARZECKA

BY

Caswell Lagaard & Wicks

ATTORNEYS

United States Patent Office 3,162,503 Patented Dec. 22, 1964

3,162,503

ELECTRICAL CONNECTORS

Herbert B. Warzecka, New Brighton, Minn., assignor to Modular Electronics, Inc., Minneapolis, Minn., a corporation of Minnesota

Filed Aug. 16, 1962, Ser. No. 217,461
2 Claims. (Cl. 339—258)

The herein disclosed invention relates to electrical connectors and has for an object to provide a connector for connecting several elements of electrical apparatus together and which will be inexpensive to manufacture.

Another object of the invention resides in constructing the connector with a two-part case constructed of insulating material and in which a plurality of sockets may be mounted and electrically separated from one another.

A still further object of the invention resides in providing a connector element having sockets to which a number of connections may be permanently made and another socket to which a detachable connection may be made.

An object of the invention resides in constructing the connector element from resilient sheet metal and in one piece.

An object of the invention resides in constructing the connector element with a body having a pair of juxtaposed sockets therein for reception of prongs, said sockets each comprising spaced curved yands extending outwardly from the plane of the body on opposite sides thereof and forming a cavity at the edge of the body for the reception of the prong.

Another object of the invention resides in constructing the bands of adjacent sockets in apposition and extending from opposite sides of the body.

A feature of the invention resides in forming said bands jointly substantially S-shaped in form.

An object of the invention resides in constructing the body of the connector element with lugs adapted to be received in a recess in one of the parts of the case and engaging both parts of the case and restraining movement of the connector element relative to the case when prongs are inserted in or removed from the sockets.

Other objects of the invention reside in the novel combination and arrangement of parts and in the details of construction hereinafter illustrated and/or described.

In the drawings:

FIGURE 1 is a plan view of a portion of an electrical connector illustrating an embodiment of the invention.

FIGURE 2 is a developed view of the blank from which the connector element is constructed.

FIGURE 3 is a plan view of the connector element and drawn to an enlarged scale.

FIGURE 4 is a longitudinal sectional view taken on line 4—4 of FIGURE 3.

FIGURE 5 is an end view of the invention.

FIGURE 6 is a view similar to FIGURE 5 of the other end of the connector element.

FIGURE 7 is an isometric view taken on line 7—7 of FIGURE 1 and drawn to a greatly enlarged scale with the parts of the case separated and the connector elements shown in various positions relative thereto.

The invention comprises a case A constructed in two parts 10 and 20. These parts are elongated in form and overlie one another and are adapted to support any number of connector elements. Only the connector element 30 shown in FIGURE 7, however, will be described in detail.

The connector element 30 shown in FIGURE 7 is constructed from resilient sheet metal. The blank from which this connector element is formed is designated by the reference numeral 31 and is illustrated in FIGURE 2. This blank has a body 32 formed with spaced slots 33 and 35 and two openings 34 and 36. By means of this

construction, bands 37, 38, and 39 are formed between the slots 33 and the opening 34 and bands 41, 42, and 43 formed between the slots 35 and the opening 36. The slots 33 and the opening 34 fall short of the lateral edge 47 of the blank to leave a marginal portion 44 connected to the bands 37, 38, and 39 at their outer ends. Similarly, the slots 35 and opening 36 fall short of the lateral edge 48 of the blank to leave a marginal portion 45 connected to the outer ends of the bands 41, 42, and 43. The slots 33 terminate short of the slots 35 and the opening 34 terminates short of the opening 36 to leave an intervening portion 46 connected to the inner ends of the bands. It will be noted the bands 37 and 41, the bands 38 and 42, and the bands 39 and 43 extend in opposite directions from the body 32 so that the joint apposed bands are substantially S-shaped in form.

The blank 31 further includes an extension 50 which is formed with two kerfs 51 and 52 which are open at their outer ends. These kerfs form in the extension fingers 53, 54, and 55 which are connected together at their inner ends by means of a connecting portion 56. The connecting portion 56 is connected to the body 32 by means of a neck 57.

The connector element 30 is formed by depressing the bands 41 and 43 and the band 38 and by raising the bands 37 and 39 and the band 42 as shown in FIGURE 7. By means of the construction, two sockets 58 and 59 are formed having cavities 61 and 62 therein. These cavities are conical in form and have a slight taper, the diameter of said cavities being greatest at the outer ends of the same. These cavities receive the prongs to be attached to the connector element and permit of forcing the same into said cavities to wedge the prongs in position. While the connector will operate with cylindrical prongs, better contact will be made if the prongs have the same taper as the cavities. These prongs are adapted to be substantially permanently attached to the connector and are seldom disconnected therefrom.

The extension 50 of the blank 31 is bent to form an object of revolution having its axis parallel to the axes of the cavities 61 and 62. By means of this construction, a socket is formed which is indicated by the reference numeral 60. This socket, at an intermediate portion 63 of the same, is formed of slightly lesser diameter than the diameter of the prong to be inserted into the cavity 65 therein. The outermost portions 66 of the fingers 53, 54, and 55 flare outwardly to permit of readily inserting the prongs into the socket. The innermost portion 67 of the socket freely receives the prong. Due to the fact that the blank 31 is constructed of resilient material, the fingers 53, 54, and 55 yield to frictionally grip the prong and permit of readily inserting the prong into the socket or removing the same therefrom.

The part 10 of case A is constructed with a series of holes 12 which freely receive the various sockets 60. These holes have reduced ends 13 and which are of dimensions to freely receive the prongs to be inserted in said sockets. These holes guide the prongs into the outer open ends of the cavities 65 and direct the same into the sockets proper. The part 10 is formed with a surface 14 which overlies a similar surface 24 on the part 20. The surface 14 has grooves 15 and 16 formed therein, while the surface 24 has mating grooves 25 and 26. In these grooves are received lugs 49 formed on the blank 31 and bent outwardly from the body 32 as shown in FIGURE 7. These lugs restrain longitudinal movement of the connector elements when the prongs are applied thereto or removed therefrom.

The part 20 is constructed with pairs of holes 22 and 23 which are adapted to receive the sockets 58 and 59. In addition, grooves 27 and 28 and slots 29 are formed

to receive the marginal portions 44 and 45 and the intermediate portion 46 of the connector elements 30.

In the assembly of the device, the various connector elements 30 are inserted into the holes 22 and 23 and into the grooves 27, 28, and the slots 29 of part 20 of case A. A connector element 30A shown in FIGURE 7 is illustrated as positioned immediately above said portion of the part 20 and in position to be inserted into one pair of holes 22 and 23 and grooves 27 and 28. The position of the same connector element indicated by the reference numeral 30 in FIGURE 7 is shown as properly applied to the part 20. After all of the connector elements are in position, the part 10 is placed over the part 20 with all of the sockets 60 received in the holes 12. The two parts are then connected together by means of the rivets 11 which extend through holes 17 in said parts.

The use of the invention is obvious. A connector is attached to the structure having the fixed elements by means of the rivets 11 passing through the openings 17 in the two parts 10 and 20. All of the permanent connecting prongs are then forced into the sockets 58 and 59 to make more or less permanent connections therewith. The detachable portion of the device with which the connector is used is then connected through flexible leads terminating in prongs suitable for use with the socket 60 and which are then applied to the proper sockets.

The invention is highly advantageous in that it can be constructed at a nominal expense. Soldering or brazing as is now customary in the manufacture of similar connectors is entirely done away with. The connector elements occupy a minimum amount of space so that a relatively small case will hold a considerable number of connector elements.

Changes in the specific form of the invention, as herein described, may be made within the scope of what is claimed without departing from the spirit of the invention.

Having described the invention, what is claimed as new and desired to be protected by Letters Patent is:

1. An electrical connector for use with a conical plug, said connector comprising,
   (*a*) a connector element constructed from sheet metal and formed with,
   (*b*) a flat body,
   (*c*) a plurality of juxtaposed sockets for the reception of prongs and carried by said body,
   (*d*) said sockets being arranged in parallel relation and each comprising,
   (*e*) spaced curved bands extending outwardly from the plane of the body on opposite sides thereof and forming a conical cavity with its end of greater diameter being disposed outwardly for the reception of the conical plug,
   (*f*) an extension on said body formed with parallel kerfs therein providing,
   (*g*) a number of fingers connected thereto and with
   (*h*) a circular connecting portion therebetween,

   (*i*) said fingers being arranged to provide a longitudinally extending cavity open at the outer end thereof for the reception of a prong,
   (*j*) said fingers extending longitudinally relative to said cavity and being movable in radial directions,
   (*k*) said connecting portion being in the form of a circle and movable in a direction to alter the circumference of the circle in which it lies,
   (*l*) and a neck between said connecting portion and said body.

2. An electrical connector for use with a plug, said connector comprising,
   (*a*) a connector element constructed from sheet metal and formed with,
   (*b*) a flat body,
   (*c*) a plurality of juxtaposed sockets for the reception of prongs and carried by said body,
   (*d*) said sockets being arranged in parallel relation and each comprising,
   (*e*) spaced curved bands extending outwardly from the plane of the body on opposite sides thereof and forming a cavity for the reception of the plug,
   (*f*) an extension on said body formed with parallel kerfs therein providing,
   (*g*) a number of fingers connected thereto and with
   (*h*) a circular connecting portion therebetween,
   (*i*) said fingers being arranged to provide a longitudinally extending cavity open at the outer end thereof for the reception of a prong,
   (*j*) said fingers extending longitudinally relative to said cavity and being movable in radial directions,
   (*k*) said connecting portion being in the form of a circle and movable in a direction to alter the circumference of the circle in which it lies,
   (*l*) and a neck between said connecting portion and said body.

References Cited by the Examiner

UNITED STATES PATENTS

2,004,076	6/35	Knutson	339—258 X
2,158,004	5/39	Douglas	339—198.4
2,209,734	7/40	Larkin	339—256 X
2,254,586	9/41	Warwick	7—14.1
2,648,827	8/53	Knollman	339—275 X
2,688,735	9/54	Hubbell	339—198 X
2,712,121	6/55	Schmier	339—157
2,745,080	5/56	Offerman	339—258 X
2,920,303	1/60	Johnson	339—159 X
2,981,926	4/61	Boardman	339—256
3,005,180	10/61	Dreher	339—273
3,026,496	3/62	Gluck	339—258 X
3,070,769	12/62	Murphy	339—192 X

JOSEPH D. SEERS, *Primary Examiner.*