(19) Octrooicentrum Nederland

(11) **2032174**

(12) B1 **OCTROOI**

(21) Aanvraagnummer: **2032174**

(22) Aanvraag ingediend: **15 juni 2022**

(62)

(51) Int. Cl.:
F03B 17/06 (2022.01)

(30) Voorrang:
-

(41) Aanvraag ingeschreven:
21 december 2023

(43) Aanvraag gepubliceerd:
-

(47) Octrooi verleend:
21 december 2023

(45) Octrooischrift uitgegeven:
28 december 2023

(73) Octrooihouder(s):
HTP TECHNOLOGIES B.V. te Willemstad, Curaçao, CW

(72) Uitvinder(s):
Johannes Willem van Briemen te Baarn
Ronald van Dijk te Delft

(74) Gemachtigde:
ir. H.Th. van den Heuvel c.s.
te 's-Hertogenbosch

(54) **Propellor system which is suitable for kinetic interaction with a fluid that flows unidirectionally through a channel, and a channel for a unidirectional fluid flow provided with such a propellor system**

(57) Propellor system which is suitable for kinetic interaction with a fluid that flows unidirectionally through a channel, wherein the propellor system comprises a supporting body which is configured to be integrated within the channel in a fixed position, and a kinetic interaction system which is provided on the supporting body such that the kinetic interaction system extends in an interior area of the channel when the supporting body is integrated in the fixed position,
wherein the kinetic interaction system is provided with either at least one pair of rotatory blades, or a single rotatory blade, and wherein each rotatory blade performs a combinatory rotation.

NL B1 2032174

Dit octrooi is verleend ongeacht het bijgevoegde resultaat van het onderzoek naar de stand van de techniek en schriftelijke opinie. Het octrooischrift komt overeen met de oorspronkelijk ingediende stukken.

Propellor system which is suitable for kinetic interaction with a fluid that flows unidirectionally through a channel, and a channel for a unidirectional fluid flow provided with such a propellor system

The present invention relates to a propellor system which is suitable for kinetic interaction with a fluid that flows unidirectionally through a channel. The invention furthermore relates to a channel for a unidirectional fluid flow which is provided with such a propellor system.

The propellor system according to the invention is suitable to transfer kinetic energy from the propellor system to a unidirectional fluid flow in the channel, wherein the propellor system exerts a thrust on the fluid flow by which the fluid flow is accelerated. Such an application is useful for aquatic means of transportation, for instance as a propellor for ships.

Furthermore, the propellor system is suitable for the transfer of kinetic energy in a reversed manner, wherein kinetic energy of a fluid flow that is led through the channel drives the propellor system to be moved, such that the kinetic energy of the fluid flow is harvested by the propellor system and can be used subsequently, such as for the conversion into electromagnetic, hydraulic, pneumatic or mechanical energy. Such an application is for instance useful in turbine systems for the creation of electromagnetic energy.

The below description is mainly focused on the first application for exerting a thrust on the fluid flow. However, it is noted that the same advantages apply vice versa to the reverse application of harvesting kinetic energy from the fluid flow by the propellor system.

Propellor systems are well known for their use in ship propulsion, and are generally based on a design of a ship propellor having several propellor blades which are rotated through the water. Although a high propulsion energy is attainable by such a ship propellor, the purely rotational motion of the blades leads to some energy losses which reduce the efficacy and hence the efficiency of the kinetic interaction of the ship propellor with the water.

In view of the prior art, the invention is directed to providing a fundamentally different design of a propellor system that kinetically interacts with a fluid flow,

which has an attractive efficacy and hence an attractive efficiency of kinetic interaction in comparison to the prior art propellor systems.

In order to achieve the above objective, a first aspect of the invention relates to the provision of:

a propellor system which is suitable for kinetic interaction with a fluid that flows unidirectionally through a channel,

wherein the propellor system comprises a supporting body which is configured to be integrated within the channel in a fixed position, and a kinetic interaction system which is provided on the supporting body such that the kinetic interaction system extends in an interior area of the channel when the supporting body is integrated in the fixed position,

wherein the kinetic interaction system includes either:

(i) at least one pair of rotatory blades, preferably at least two pairs of rotatory blades, wherein each pair of rotatory blades is provided in such a way that:

- each rotatory blade has a planar shape comprising two opposite, operational surfaces which are designed for kinetic interaction with a fluid flow;
- each rotatory blade comprises a respective blade axis over which the rotatory blade is rotatable, and a respective blade gearing which is drivingly engaged to the blade axis;
- the two rotatory blades are rotatably mounted by means of their respective blade axes onto one side of a common wheel and at a distance from each other, wherein the common wheel comprises a wheel axis over which the common wheel is rotatable, and wherein the two blade axes are mounted onto the common wheel at two respective positions which are both eccentric to the wheel axis,
- the common wheel is rotatably connected to the supporting body by virtue of the wheel axis, and is drivingly connected to a wheel gearing;
- the rotation of the common wheel drives the two blade gearings in order to rotate the two blade axes simultaneously;
- the configuration of the kinetic interaction system is such that the two blade axes and the wheel axis have a similar, or parallel, direction to each other;
- during operation of the propellor system, the rotation of the common wheel in combination with the simultaneous rotation of each rotatory blade over its

blade axis results in a combinatory rotation being performed by each rotatory blade, wherein each rotatory blade follows a cyclic trajectory per revolution of the common wheel, while the two rotatory blades do not contact with each other during their simultaneous rotations, or

(ii) a single rotatory blade, which is provided in such a way that:

- the rotatory blade has a planar shape comprising two opposite, operational surfaces which are designed for kinetic interaction with a fluid flow;
- the rotatory blade comprises a respective blade axis over which the rotatory blade is rotatable, and a respective blade gearing which is drivingly engaged to the blade axis;
- the rotatory blade is rotatably mounted by means of its blade axis onto one side of a common wheel, wherein the common wheel comprises a wheel axis over which the common wheel is rotatable, and wherein the blade axis is mounted onto the common wheel at a position which is eccentric to the wheel axis,
- the common wheel is rotatably connected to the supporting body by virtue of the wheel axis, and is drivingly connected to a wheel gearing;
- the rotation of the common wheel drives the blade gearing in order to rotate the blade axis;
- the configuration of the kinetic interaction system is such that the blade axis and the wheel axis have a similar, or parallel, direction to each other;
- during operation of the propellor system, the rotation of the common wheel in combination with the simultaneous rotation of the rotatory blade over its blade axis results in a combinatory rotation being performed by the rotatory blade, wherein the rotatory blade follows a cyclic trajectory per revolution of the common wheel.

Such a propellor system with a kinetic interaction system according to either option (i) or (ii), allows the rotatory blade to exert a thrusting force onto the unidirectional fluid flow during a thrusting phase of its cyclic trajectory, wherein the operational surfaces of the blade assume an active orientation when being moved in a direction that follows the unidirectional fluid flow, while during a complementary phase of the cyclic trajectory the operational surfaces of the blade assume an idle orientation when being moved in a direction against the unidirectional fluid flow. The propellor

system is therefore highly effective in transferring its kinetic energy onto a flow of fluid in a channel.

Additionally, when the propellor system includes a kinetic system according to option (ii), the pair of rotatory blades per common wheel allows for exerting successive thrusting power upon the fluid flow by the two blades in an alternating way during one revolution of the common wheel, which results in a relatively constant thrust power of the propellor system per revolution of the common wheel, which further contributes to the efficiency of the propellor system.

It is preferred in the propellor system according to the invention, that the cyclic trajectory that the rotatory blade follows is conform the shape of a cardioid curve, in particular in view of the cyclic trajectory of a lateral end part of the rotatory blade.

Such a cyclic trajectory was found highly suitable for improving the efficiency and efficacy of the propellor system, especially in view of improving the kinetic interaction with a fluid flow.

It is noted for clarity, that as a result of the combinatory rotation of the rotatory blade, all parts of the rotatory blade which do not coincide with the blade axis will follow a cyclic trajectory having the shape of a cardioid curve. This aspect of the cyclic trajectory is most prominent when following the lateral end parts of the rotatory blade. The cyclic trajectory of the lateral end parts furthermore delimits the area wherein the rotatory blade will be moving during operation.

Further preferred in the propellor system according to the invention, is that the cyclic trajectory of the two rotatory blades within one pair is similar or identical.

This assures that the kinetic interaction of the fluid flow with the two rotatory blades within one pair is similar or identical during operation, which contributes to the efficacy of the propellor system.

In a preferred embodiment of the propellor system according to the invention, the blade gearing of each rotatory blade has a gearing ratio of 1/2, such that one revolution of the common wheel results in half a rotation of the rotatory blade over its blade axis.

Such a gearing ratio achieves that the orientation of the rotatory blade is 180 degrees rotated upon a next revolution of the common wheel, which is advantageous to the efficacy of the propellor system. The opposed operational

surfaces are both designed for kinetical interaction with the fluid flow, and have thus a similar design. Therefore, the effective orientation of the rotatory blade is repeated during each revolution although a different side (i.e. operational surface of the blade) is facing the fluid flow. As such, the rotatory blade assumes the same orientation after a successive, complete revolution of the common wheel.

In a next preferred embodiment of the propellor system according to the invention, the blade axes of two rotatory blades within each pair of rotatory blades are mounted onto the common wheel in opposed positions with respect to the wheel axis, preferably in diametrically opposed positions.

Such a positioning of the rotatory blades by their respective blade axes results in a sequence of successive rotatory blades performing their kinetic interactions at equal time intervals, thus achieving a more constant thrust power per revolution of the common wheel.

It is further preferred in the propellor system according to the invention, that during operation of the propellor system, the two rotatory blades within one pair execute their respective combinatory rotations simultaneously and with a phase difference, preferably a phase difference between 160 and 200 degrees, most preferably 180 degrees.

By the phase difference between the two combinatory rotations, the orientations of the rotatory blades are complementary to each other, and occur successively at equal time intervals.

It is also preferred in the propellor system according to the invention, that during one revolution of the common wheel, the rotatory blade assumes an idle (inactive or drag) orientation for minimum kinetic interaction during a first half of the revolution of the common wheel, and the rotatory blade assumes an active (thrust) orientation for maximum kinetic interaction during a second half of the revolution of the common wheel.

During the first half of the revolution, the idle orientation of the rotatory blade is assumed by a substantially parallel orientation of the operational surfaces of the rotatory blade with respect to the unidirectional fluid flow. During the second half of the revolution, the active orientation of the rotatory blade is assumed by a

substantially perpendicular orientation of the operational surfaces of the rotatory blade with respect to the unidirectional fluid flow.

Such a configuration is especially effective, when the propellor system is fixed within the channel in such a way, that the first half of the revolution involves the blade axis of the rotatory blade moving against the direction of the fluid flow, while the second half of the revolution involves the blade axis of the rotatory blade moving with the direction of the fluid flow.

In a further preferred embodiment of the propellor system according to the invention, the rotational speed of the rotatory blade, during one complete revolution of the common wheel, gradually increases from a minimum rotational speed to a maximum rotational speed and subsequently gradually decreases from the maximum rotational speed to the minimum rotational speed, wherein preferably the ratio of maximum rotational speed versus minimum rotational speed is about 2 : 1.

In the propellor system according to the invention, it is particularly preferred that the maximum rotational speed is achieved during the first half of the complete revolution of the common wheel wherein the idle orientation of the rotatory blade is assumed, and the minimum rotational speed is achieved during the second half of the complete revolution of the common wheel wherein the active orientation of the rotatory blade is assumed.

In the propellor system, the maximum kinetic interaction is achieved in active orientation of the blade (i.e substantially perpendicular to the unidirectional fluid flow). When this orientation is assumed in a phase of rotation wherein simultaneously a lower rotational speed is observed, an effectively longer period for kinetic interaction with the fluid flow is achieved. Consequently, the efficacy of the kinetic interaction of the propellor system is enhanced.

During this phase of thrust, the blade is thus moved by a translation in an axial direction that is aligned with the unidirectional fluid flow, while the rotational motion of the blades is kept minimum when the thrusting force is exerted.

Especially preferred in the propellor system according to the invention, is that the blade gearing for each rotatory blade includes an elliptic or oval gear co-operating with a circular gear, wherein preferably the circular gear is an eccentrically rotating, circular gear.

Such a blade gearing achieves a rotational speed of the rotatory blade which gradually oscillates between a maximum and minimum rotational speed.

Alternatively, the gradual oscillation between a maximum and minimum rotational speed may be accomplished in a different way, such as by using a microprocessor controlled stepper electro engine which is programmed to execute such an oscillating rotational speed.

It is especially preferred in the propellor system according to the invention, that the blade gearing for each rotatory blade is mounted on the respective common wheel, wherein the blade gearing is positioned such that it includes one connecting gear that engages with a non-rotatory gear fixated onto the supporting body in a position concentric with the wheel axis.

This combination of interacting gears is highly suitable to perform the combinatory rotation of the rotatory blade, while it is driven by the rotation of the common wheel.

Further preferred in the propellor system according to the invention, is that each rotatory blade has a height and a width, wherein the blade axis extends parallel to the height direction of the rotatory blade, and preferably the height of the rotatory blade is larger than the width of the rotatory blade.

Such a dimensioning of the rotatory blade is highly suitable for executing the specific combinatory rotations while achieving an effective and efficient kinetic interaction with a fluid flow.

It is particularly attractive when the height and the width of the rotatory blade are substantially constant over the whole rotatory blade. Alternatively, the width of the rotatory blade may gradually taper towards its middle height in comparison to the width at the upper and lower ends of the rotatory blade.

Preferably, in the propellor system according to the invention, the opposed operational surfaces of each rotatory blade are similar or identical, and are substantially shaped as planar surfaces which are preferably provided with curved lateral end sections when viewed in cross-section perpendicular to the height direction of the rotatory blade.

In a particularly preferred propellor system according to the invention, the kinetic interaction system comprises a first pair of rotatory blades and a second pair of rotatory blades,

wherein the first pair of rotatory blades is rotatably connected to a first common wheel, and the second pair of rotatory blades is rotatably connected to a second common wheel,

wherein the first common wheel and second common wheel are rotatably connected to the supporting body such that the first common wheel and second common wheel are arranged adjacent to each other in a coplanar configuration, and are drivingly connected to a respective first and second wheel gearing, wherein preferably the first common wheel and the second common wheel rotate in opposite directions to each other during operation.

A rotation in opposite directions may expediently be accomplished by providing each of the two circumferences of the first common wheel and the second common wheel with a toothed gearing which directly engage with each other.

This preferred, dual configuration of two pairs of rotatory blades offers the possibility of an enhanced kinetic interaction with the unidirectional fluid flow because both the first and second pair of rotatory blades contribute in a synergetic manner by substantially exerting their combined thrusting power onto the major part of the fluid flow (i.e. the central part of the fluid flow).

The above described enhanced kinetic interaction of the dual configuration with two pairs of rotatory blades is particularly effective, when during one revolution of each common wheel, the rotatory blade assumes an idle (inactive or drag) orientation for minimum kinetic interaction during a first half of the revolution of the common wheel, and the rotatory blade assumes an active (thrust) orientation for maximum kinetic interaction during a second half of the revolution of the common wheel, in such a way that the rotatory blades of both pairs assume an active orientation at a relatively short distance from each other and assume an idle orientation at a relatively large distance from each other.

In the propellor system according to the invention, it is further preferred that the first pair of rotatory blades and the second pair of rotatory blades rotate in opposite directions and in mirror symmetry to each other, and that the rotational phase of the

rotatory blades of the first common wheel and the rotational phase of the rotatory blades of the second common wheel are different from each other by a phase difference of 60 to 120 degrees, preferably 80 to 100 degrees, more preferably 90 degrees.

As such, the four successive active orientations of the rotatory blades of the two pairs are only separated from each other by an even smaller phase difference than achievable within one pair. This further contributes to achieving a more constant thrusting power of the propellor system.

It is particularly interesting when, in the propellor system according to the invention, the cyclic trajectory of the rotatory blades of the first pair partially overlaps with the cyclic trajectory of the rotatory blades of the second pair, in particular in view of the cyclic trajectory of the lateral end part of each rotatory blade.

This further contributes to achieving a synergetic thrusting power achieved by the combination of the two pair of rotatory blades.

When the propellor system according to the invention comprises a kinetic interaction system according to option (ii), it is especially preferred that the propellor system comprises a first kinetic interaction system according to option (ii), and a second kinetic interaction system according to option (ii), wherein the first kinetic interaction comprises a single rotatory blade that is rotatably connected to a first common wheel, and the second kinetic interaction comprises a single rotatory blade that is rotatably connected to a second common wheel,

wherein the first common wheel and the second common wheel are rotatably connected to the supporting body such that the first common wheel and second common wheel are arranged adjacent to each other in a coplanar configuration, and are drivingly connected to a respective first and second wheel gearing, wherein preferably the first common wheel and the second common wheel rotate in opposite directions to each other during operation.

In the context of the above preferred embodiment of the propellor system comprising a kinetic interaction system according to option (ii), it is particularly preferred that the single rotatory blade of the first kinetic interaction system and the single rotatory blade of the second kinetic interaction system rotate in opposite directions and in mirror symmetry to each other, and the rotational phase of the first

common wheel and the second common wheel are different from each other by a phase difference, preferably a phase difference between 160 and 200 degrees, most preferably 180 degrees.

Furthermore In the context of the above preferred embodiment of the propellor system comprising a kinetic interaction system according to option (ii), it is preferred that the cyclic trajectory of the single rotatory blade of the first kinetic interaction system overlaps with the cyclic trajectory of the single rotatory blade of the second kinetic interaction system, in particular in view of the cyclic trajectory of the lateral end part of each rotatory blade.

In a second aspect, the invention relates to:

a channel for conducting a unidirectional fluid flow, which comprises side walls and an entry side and an exit side for unidirectionally conducting a flow of fluid from the entry side to the exit side, which channel is provided with a propellor system according to the first aspect of the invention,

wherein the supporting body of the propellor system is fixedly integrated within the channel, and the kinetic interaction system of the propellor system includes at least one common wheel which is provided in such a way that:

- during one revolution of each common wheel, the rotatory blade assumes an idle (inactive or drag) orientation for minimum kinetic interaction during a first half of the revolution of the common wheel, and the rotatory blade assumes an active (thrust) orientation for maximum kinetic interaction during a second half of the revolution of the common wheel;
- each common wheel rotates against the unidirectional flow of fluid in the channel during its first half of revolution, and the common wheel rotates with the unidirectional flow of fluid in the channel during its second half of revolution,

wherein the first half of the revolution is performed at a small distance from a nearest side wall of the channel whereas the second half of the revolution is performed at a large distance from the nearest side wall of the channel.

In such a channel the kinetic interaction with the unidirectional fluid flow occurs for the major part in the second half of the revolution, and it is hydrodynamically advantageous to have this second half being distanced from the nearest side wall. Conversely, it is also hydrodynamically attractive when the first

half during which an idle orientation is assumed, is performed close to the nearest side wall of the channel.

The above advantages of distance to the are even more prominent, when the propellor system has a dual configuration with two adjacent common wheels as discussed above.

In a particularly preferred embodiment of the channel according to the invention, the propellor system is fixedly integrated in a longitudinal section of the channel through which the fluid flow is conducted, which longitudinal section has a width between opposed side walls of the channel which width is not more than 20% larger, preferably not more than 10% larger, than the width necessary for allowing the rotatory blades to execute their respective cyclic trajectories during operation without contacting the opposed side walls.

Such a dimensioning of the channel assures the most effective and hence efficient kinetic interaction of the propellor system with the unidirectional fluid flow that is conducted through the channel.

In regard of the propellor system being suitable for different purposes, some specific arrangements have been observed that were highly effective in practice.

When the propellor system is applied for exerting a thrust on a fluid flow such as in an engine for propulsion of a ship, a vertical orientation of the propellor system within the ship proved particularly effective. In this context, the vertical orientation of the propellor system is achieved when the blade axis of each rotatory blade is oriented in a direction parallel or similar to the vertical axis of the ship on which the propellor system is fixedly mounted.

Furthermore, it was found that when the propellor system is applied for harvesting kinetic energy from a fluid flow, it is attractive when the propellor system is fixedly mounted such that it is horizontally oriented to the environment. The horizontal orientation is achieved when the blade axis of each rotatory blade is oriented in a direction parallel or similar to the horizontal plane of the environment.

The invention will be further elucidated by the appended figures, showing preferred embodiments of the invention, wherein:

Fig. 1 shows a propellor system according to the invention in a dual configuration;

Fig. 2 shows a single rotatory blade;

Fig. 3 shows a cross-sectioned part of a channel provided with a propellor system according to fig. 1;

Fig. 4 shows a top-view of a cross-sectioned part of the propellor system depicted in fig. 3;

Fig. 5 shows a bottom-view of a common wheel of the propellor system depicted in fig. 4;

Fig. 6 shows a top-view of one pair of rotatory blades according to fig. 4, during subsequent phases of rotation of the common wheel;

Fig. 7 shows the resultant thrust power that is exerted onto a unidirectional fluid flow by the propellor system according to fig. 1, during operation of the propellor system over a period of time.

Figure 1 shows a propellor system 1 in a dual configuration, which comprises an bottom supporting body 3a, and an upper supporting body 3b, which are flat structures configured to be integrated within a channel in a fixed position. A kinetic interaction system 5 is on the upper side connected to the upper supporting body 3b by two upper wheel axes 7 and 7' over which two respective upper common wheels (non-visible) are rotatable. At the bottom supporting body 3a, and in a mirror-symmetrical fashion to the upper supporting body 3b, the kinetic interaction system 5 is connected to respective bottom common wheels 9 and 9' which are rotatable over respective bottom wheel axes (non-visible; positioned in line with the upper wheel axes 7 and 7').

On each common wheel 9 and 9', a pair of rotatory blades 11 and 11' (only one is visible) is rotatably mounted by means of their respective blade axes 12 and 12'. The pair of rotatory blades 11 connected to a common wheel 9 is an embodiment of a kinetic interaction system that is in conformity with option (i) as defined above for the invention.

In the case that in the embodiment of fig. 1, the common wheel 9 would be provided with only one single rotatory blade 11 (instead of two blades as depicted),

such an embodiment would comply with having a kinetic interaction system in conformity with option (ii) as defined above for the invention.

Figure 2 shows an individual rotatory blade 11 separated from the propellor system shown in fig. 1. The rotatory blade 11 has an constant height H and constant width W, and is provided at upper and lower side with a blade axis 12 to be rotatably connectable to the common wheels 9 shown in fig. 1.

The rotatory blade 11 has two opposed operational surfaces 14 and 14' for kinetic interaction with a fluid flow, which surfaces 14 and 14' are similar or identical, and are substantially shaped as planar surfaces which are provided with curved lateral end sections 16 and 16' when viewed in cross-section perpendicular to the height direction H of the rotatory blade 11.

Figure 3 shows a longitudinally cross-sectioned part of a channel 30 for conducting a unidirectional fluid flow, which comprises side walls 32 and an entry side 33 and an exit side 34 for unidirectionally conducting a flow of fluid F from the entry side to the exit side, which channel has a longitudinal section 35 that is provided with a likewise cross-sectioned part of the propellor system 1 shown in fig. 1, which is fixedly connected to the channel 1 by support body 3a.

Figure 4 shows a top view of a cross-sectioned part of a propellor system as depicted in fig. 3, wherein the bottom common wheels 9' and 9 and bottom supporting body 3a are shown as depicted in fig. 1. Corresponding further features already indicated above with respect to fig. 1-3, are indicated by the same reference numerals in fig. 4. The longitudinal section 35 of the channel comprises two opposite side walls 40 and 40'.

Figure 5 shows a bottom-view of a common wheel 9 of the propellor system depicted in fig. 4, of which the complete circumference is provided with a toothed gearing 58 in order to engage with a suitable wheel gear (not depicted) that drives the rotation of the common wheel 9.

The center of the wheel 9 is provided with a wheel axis 7, which is rotatably connected to support body 3a (only a fragment of the support body is depicted). Fixated onto the support body 3a is a non-rotatory gear 60 (partly visible; partly indicated by dotted lines) which is in concentric position with the wheel axis 7.

The non-rotatory gear 60 is engagingly positioned between two blade gearings 62 which are composed of respective gears 54, 52 and 50 that are mounted onto the wheel 9 and which are positioned at diametrically opposed positions to each other. The non-rotatory gear 60 directly engages with gear 54 of the blade gearing 62 which is a circular gear that rotates over its concentric gear axis 56 that is rotatably connected to the wheel 9. The gear 54 is further provided with an eccentric circular gear 52 that is fixated onto the gear 54 in an eccentric position to the gear axis 56. The eccentric gear 52 engages with an elliptic or oval gear 50 having a center point that is provided with blade axis 12 onto which the rotatory blade is connected (as depicted in fig. 4).

In the configuration shown, a rotation of the wheel 9 will set the gear 54 in motion as it circles around the non-rotatory gear 60. Consequently the gear 54 drives the gears 52 and 50 so that the blade axis 12 is rotated. Within the blade gearing 62 composed of gears 54, 52 and 50, the gear 54 thus functions as a connecting gear that connects with the non-rotatory gear 60 in order to transmit the rotational motion of the wheel 9 onto the blade axis 12.

Figure 6 shows a sequence of seven diagrams each of which shows a top-view of one pair of rotatory blades 11A and 11B corresponding to the right pair of rotatory blades 11 shown in fig. 4, during subsequent phases of rotation of the common wheel 9 when the propellor system is in operation. In each successive diagram shown, the phase of rotation the common wheel 9 rotates in anti-clockwise direction by 30 degrees over its central axis (not shown, but conform fig. 4). The rotation of the common wheel is driven by a wheel gearing (not visible), and the subsequent phase of rotation of the common wheel is indicated by a three-digit number (i.e. 000 up to 180).

By virtue of the rotation of the common wheel 9 over its central axis the two respective blade gearings of blades 11A and 11B are driven, via respective circular gear 52A and 52B engaged with respective oval gear 50A and 50B, such that blade axes 12A and 12B are rotated and consequently the rotatory blades 11A and 11B are rotated. The circumferences of the oval gear and circular gear are provided with toothed gearing, such that the gearing ratio of circular to oval equals 1 : 2.

For the sake of visibility of the diagrams of fig. 6, only the most relevant parts 50 and 52 of the blade gearing of each rotatory blade are shown, although the blade gearings comprise further additional parts conform fig. 5.

Starting from the top left diagram (000 degrees) the orientation of rotatory blade 11B is perpendicular to the indicated unidirectional fluid flow F, whereas the orientation of rotatory blade 11A is aligned with the indicated unidirectional fluid flow F. The orientation of blade 11A is herein an idle orientation, meaning that a minimum of kinetic interaction with the fluid flow F is achieved. Simultaneously, the orientation of blade 11B is herein an active orientation, meaning that a maximum of kinetic interaction with the fluid flow F is achieved.

During subsequent phases (030 up to 150 degrees), the orientation and position of the blades 11A and 11B progresses, such that at 180 degrees (bottom right diagram) the orientation of both blades has exactly been switched such that blade 11A is in an active orientation, and blade 11B is in idle orientation. As both blades are identical and each blade has identical sides, and each blade has identical blade gearings, the subsequent phases of the common wheel rotation from 180 up to 360 degrees are identical to the phases shown in 000 up to 180 degrees, except that the blades 11A and 11B should be indicated reversely.

It is noted that from 090 degrees of rotation of the common wheel, the blade axis 12A of blade 11A will move with the unidirectional flow of fluid in the channel, which is prolonged for half a revolution of the common wheel, i.e. up to 270 degrees rotation (corresponding to the position depicted for blade 11B at 090 degrees). This trajectory from 090 to 270 degrees of rotation corresponds to a second half of revolution wherein the active orientation (at 180 degrees) is assumed. The complementary trajectory from 270 up to 090 degrees corresponds to a first half of revolution wherein the idle orientation is assumed (at 000 degrees). The same sequence applies to the blade 11B, however with a phase difference of 180 degrees.

Figure 7 shows the resultant thrust power that is exerted onto a unidirectional fluid flow by the propellor system according to fig. 1, over a period of time of operation wherein successive rotations of the common wheels 9 and 9' are performed.

On the x-axis the degrees of rotation of the common wheels 9 and 9' are indicated, and on the y-axis the amount of thrust is indicated for the separate common wheels during successive rotations by respective 69 and 69' curves. The total thrust that is delivered by the propellor system indicated as [69+69']. From this

figure it can be directly derived that the propellor system achieves a virtually constant thrust power during its operation at constant rotation speed of the common wheels, resulting in an excellent efficacy and effectivity of the propellor system according to the invention.

Conclusies

1. Propellersysteem dat geschikt is voor kinetische interactie met een vloeistof die in één richting door een kanaal stroomt,

waarbij het propellersysteem een ondersteuningslichaam omvat dat is ingericht om in een gefixeerde positie opgenomen te worden in het kanaal, en een kinetisch interactiesysteem dat is voorzien op het ondersteuningslichaam zodanig dat het kinetische interactiesysteem zich in een binnenruimte van het kanaal uitstrekt wanneer het ondersteuningslichaam in gefixeerde positie is opgenomen,

waarbij het kinetische interactiesysteem ofwel omvat:

(i) ten minste één paar rotatiebladen, bij voorkeur ten minste twee paar rotatiebladen, waarbij ieder paar rotatiebladen op een zodanige manier is voorzien dat:

- ieder rotatieblad een vlakke vorm heeft omvattende twee tegengestelde, uitvoerende oppervlakken die zijn vormgegeven voor kinetische interactie met een vloeistofstroom;
- ieder rotatieblad omvat een respectievelijk bladas waarover het rotatieblad roteerbaar is, en een respectievelijke bladvertanding die aangedreven verbonden is aan de bladas;
- de twee rotatiebladen zijn roteerbaar bevestigd door hun respectievelijke bladassen aan één zijde van een gemeenschappelijk wiel en op een afstand van elkaar, waarbij het gemeenschappelijke wiel een wielas omvat waarover het gemeenschappelijke wiel roteerbaar is, en waarbij de twee bladassen zijn bevestigd op het gemeenschappelijke wiel op twee respectievelijke posities welke beide excentrisch zijn ten opzichte van de wielas,
- het gemeenschappelijke wiel roteerbaar is verbonden aan het ondersteuningslichaam op grond van de wielas, en aandrijvend verbonden is met een tandwiel;
- de rotatie van het gemeenschappelijke wiel de twee bladvertandingen aandrijft om de twee bladassen gelijktijdig te roteren;
- de inrichting van het kinetische interactiesysteem zodanig is dat de twee bladassen en de wielas eenzelfde, of parallelle, richting naar elkaar hebben;
- tijdens de werking van het propellersysteem, resulteert de rotatie van het gemeenschappelijke wiel in combinatie met de gelijktijdige rotatie van ieder rotatieblad over zijn bladas in een combinerende rotatie die wordt

uitgevoerd door ieder rotatieblad, waarbij ieder rotatieblad een cyclisch traject per omwenteling van het gemeenschappelijke wiel volgt, terwijl de twee rotatiebladen geen contact met elkaar maken tijdens hun gelijktijdige rotatie,

dan wel

(ii) een enkel rotatieblad, dat op een zodanige manier is voorzien dat:

- het rotatieblad een vlakke vorm heeft omvattende twee tegengestelde, uitvoerende oppervlakken die zijn vormgegeven voor kinetische interactie met een vloeistofstroom;
- het rotatieblad een respectievelijk bladas omvat waarover het rotatieblad roteerbaar is, en een respectievelijke bladvertanding die aangedreven verbonden is aan de bladas;
- het rotatieblad roteerbaar is bevestigd door zijn bladas aan één zijde van een gemeenschappelijk wiel, waarbij het gemeenschappelijke wiel een wielas omvat waarover het gemeenschappelijke wiel roteerbaar is, en waarbij de bladas is bevestigd op het gemeenschappelijke wiel op een positie die excentrisch is ten opzichte van de wielas,
- het gemeenschappelijke wiel roteerbaar is verbonden aan het ondersteuningslichaam op grond van de wielas, en aandrijvend verbonden is met een tandwiel;
- de rotatie van het gemeenschappelijke wiel de bladvertanding aandrijft om de bladas te roteren;
- de inrichting van het kinetische interactiesysteem zodanig is dat de bladas en de wielas eenzelfde, of parallelle, richting naar elkaar hebben;
- tijdens werking van het propellersysteem, resulteert de rotatie van het gemeenschappelijke wiel in combinatie met de gelijktijdige rotatie van het rotatieblad over zijn bladas in een combinerende rotatie die wordt uitgevoerd door het rotatieblad, waarbij het rotatieblad een cyclisch traject per omwenteling van het gemeenschappelijke wiel volgt.

2. Propellersysteem volgens conclusie 1, waarbij het cyclische traject dat het rotatieblad volgt overeenkomstig is met de vorm van een cardioïde kromme, in het bijzonder met het oog op het cyclische traject van een lateraal einddeel van het rotatieblad.

3. Propellersysteem volgens conclusie 1 of 2, waarbij het cyclische traject van de twee rotatiebladen binnen één paar soortgelijk of identiek is.

4. Propellersysteem volgens één der voorgaande conclusies, waarbij de bladvertanding van ieder rotatieblad een vertandingratio van 1/2 heeft, zodanig dat één omwenteling van het gemeenschappelijke wiel resulteert in een halve rotatie van het rotatieblad over zijn bladas.

5. Propellersysteem volgens één der voorgaande conclusies, waarbij de bladassen van twee rotatiebladen tussen ieder paar rotatiebladen zijn bevestigd aan het gemeenschappelijke wiel aan tegenovergelegen posities ten opzichte van de wielas, bij voorkeur haaks op tegenovergelegen posities.

6. Propellersysteem volgens één der voorgaande conclusies, waarbij tijdens werking van het propellersysteem, de twee rotatiebladen binnen één paar hun respectievelijke combinerende rotaties gelijktijdig uitvoeren en met een faseverschil, bij voorkeur een faseverschil tussen 160 en 200 graden, meest bij voorkeur 180 graden.

7. Propellersysteem volgens één der voorgaande conclusies, waarbij tijdens één omwenteling van het gemeenschappelijke wiel, het rotatieblad een passieve oriëntatie aanneemt voor minimale kinetische interactie tijdens een eerste helft van de omwenteling van het gemeenschappelijke wiel, en het rotatieblad een actieve oriëntatie aanneemt voor een maximale kinetische interactie tijdens een tweede helft van de omwenteling van het gemeenschappelijke wiel.

8. Propellersysteem volgens een der voorgaande conclusies, waarbij tijdens één gehele omwenteling van het gemeenschappelijke wiel, de rotatiesnelheid van het rotatieblad geleidelijk toeneemt van een minimale rotatiesnelheid tot een maximale rotatiesnelheid en vervolgens geleidelijk afneemt van de maximale rotatiesnelheid tot de minimale rotatiesnelheid, waarbij bij voorkeur de ratio van de maximale rotatiesnelheid tegen de minimale rotatiesnelheid ongeveer 2 : 1 is.

9. Propellersysteem volgens een gecombineerde conclusie 7 en 8, waarbij de maximale rotatiesnelheid wordt bereikt tijdens de eerste helft van de gehele

omwenteling van het gemeenschappelijke wiel waarbij de passieve oriëntatie van het rotatieblad wordt aangenomen, en de minimale rotatiesnelheid wordt bereikt tijdens de tweede helft van de gehele omwenteling van het gemeenschappelijke wiel waarbij de actieve oriëntatie van het rotatieblad wordt aangenomen.

10. Propellersysteem volgens conclusie 8 of 9, waarbij de bladvertanding voor ieder rotatieblad een elliptisch of ovaal tandwiel behelst dat samenwerkt met een circulair tandwiel, waarbij bij voorkeur het circulaire tandwiel een excentrisch roterend circulair tandwiel is.

11. Propellersysteem volgens één der voorgaande conclusies, waarbij de bladvertanding van ieder rotatieblad bevestigd is op het respectievelijke gemeenschappelijke wiel, waarbij de bladvertanding gepositioneerd is zodanig dat het één verbindend tandwiel behelst dat verbindt met een niet-roteerbaar tandwiel gefixeerd op het ondersteuningslichaam in een concentrische positie met de wielas.

12. Propellersysteem volgens één der voorgaande conclusies, waarbij ieder rotatieblad een hoogte en een breedte heeft, waarbij de bladas parallel uitstrekt in de hoogterichting van het rotatieblad, en bij voorkeur de hoogte van het rotatieblad groter is dan de breedte van het rotatieblad.

13. Propellersysteem volgens een der voorgaande conclusies, waarbij de tegenovergelegen uitvoerende oppervlakken van ieder rotatieblad soortgelijk of identiek zijn, en hoofdzakelijk als vlakke oppervlakken gevormd zijn welke bij voorkeur zijn voorzien met gekromde laterale einddelen wanneer bekeken in dwarsdoorsnede loodrecht aan de hoogterichting van het rotatieblad gezien.

14. Propellersysteem volgens één der voorgaande conclusies, waarbij het kinetische interactiesysteem een eerste paar rotatiebladen en een tweede paar rotatiebladen omvat,

waarbij het eerste paar rotatiebladen roteerbaar verbonden is aan een eerste gemeenschappelijk wiel, en het tweede paar rotatiebladen roteerbaar is verbonden aan een tweede gemeenschappelijk wiel,

waarbij het eerste gemeenschappelijke wiel en tweede gemeenschappelijke wiel roteerbaar verbonden zijn aan het ondersteuningslichaam zodanig dat het eerste gemeenschappelijke wiel en tweede gemeenschappelijke wiel aangrenzend aan elkaar zijn ingericht in een coplanaire inrichting, en aangedreven verbonden zijn aan een respectievelijk eerste en tweede tandwiel, waarbij bij voorkeur het eerste gemeenschappelijke wiel en het tweede gemeenschappelijke wiel in tegengestelde richtingen van elkaar roteren gedurende de werking.

15. Propellersysteem volgens conclusie 14, waarbij het eerste paar rotatiebladen en het tweede paar rotatiebladen roteren in tegenovergestelde richting en in spiegelsymmetrie naar elkaar, en de rotatiefase van de rotatiebladen van het eerste gemeenschappelijke wiel en de rotatiefase van de rotatiebladen van het tweede gemeenschappelijke wiel verschillend van elkaar zijn met een faseverschil van 60 tot 120 graden, bij voorkeur 80 tot 100 graden, meer bij voorkeur 90 graden.

16. Propellersysteem volgens conclusie 14 of 15, waarbij het cyclische traject van de rotatiebladen van het eerste paar gedeeltelijk overlapt met het cyclische traject van de rotatiebladen van het tweede paar, in het bijzonder gezien het cyclische traject van het laterale uiteinde van ieder rotatieblad.

17. Propellersysteem volgens één van de voorgaande conclusies 1-13, omvattende een eerste kinetisch interactiesysteem volgens optie (ii), en een tweede kinetisch interactiesysteem volgens optie (ii), waarbij het eerste kinetische interactiesysteem een enkel rotatieblad omvat dat roteerbaar verbonden is aan een eerste gemeenschappelijk wiel, en het tweede kinetische interactiesysteem een enkel rotatieblad omvat dat roteerbaar verbonden is aan een tweede gemeenschappelijk wiel,

waarbij het eerste gemeenschappelijke wiel en het tweede gemeenschappelijke wiel roteerbaar verbonden zijn aan het ondersteuningslichaam zodanig dat het eerste gemeenschappelijke wiel en tweede gemeenschappelijke wiel aangrenzend aan elkaar zijn ingericht in een coplanaire inrichting, en aangedreven verbonden zijn aan een respectievelijk eerste en tweede tandwiel, waarbij bij voorkeur het eerste gemeenschappelijke wiel en het tweede

gemeenschappelijke wiel in tegengestelde richting van elkaar roteren gedurende de werking.

18. Propellersysteem volgens conclusie 17, waarbij het enkele rotatieblad van het eerste kinetische interactiesysteem en het enkele rotatieblad van het tweede kinetische interactiesysteem roteren in tegengestelde richtingen en in spiegelsymmetrie naar elkaar, en de rotatiefase van het eerste gemeenschappelijke wiel en het tweede gemeenschappelijke wiel verschillend van elkaar zijn met een faseverschil, bij voorkeur een faseverschil tussen 160 en 200 graden, meest bij voorkeur 180 graden.

19. Propellersysteem volgens conclusie 17 of 18, waarbij het cyclische traject van het enkele rotatieblad van het eerste kinetische interactiesysteem overlapt met het cyclische traject van het enkele rotatieblad van het tweede kinetische interactiesysteem, in bijzonder gezien het cyclische traject van het laterale einddeel van ieder rotatieblad.

20. Kanaal voor het geleiden van een éénrichtingsvloeistofstroom, welke zijwanden en een ingangszijde en een uitgangszijde omvat voor het eenrichtingsgeleiden van een stroom van vloeistof van de ingangszijde naar de uitgangszijde, welk kanaal is voorzien met een propellersysteem volgens één der voorgaande conclusies,

waarbij het ondersteuningslichaam van het propellersysteem gefixeerd geïntegreerd is in het kanaal, en het kinetische interactiesysteem van het propellersysteem ten minste één gemeenschappelijk wiel behelst dat zodanig is voorzien dat:

- gedurende een volledige omwenteling van ieder gemeenschappelijk wiel, het rotatieblad een passieve (inactief of sleep) oriëntatie aanneemt voor minimale kinetische interactie gedurende een eerste helft van de volledige omwenteling van het gemeenschappelijke wiel, en het rotatieblad een actieve (stuw) oriëntatie aanneemt voor maximale kinetische interactie gedurende een tweede helft van de omwenteling van het gemeenschappelijke wiel;
- ieder gemeenschappelijk wiel tegen de eenrichtingsstroom van vloeistof in het kanaal in roteert gedurende de eerste helft van de volledige

omwenteling, en het gemeenschappelijke wiel met de eenrichtingsstroom van vloeistof in het kanaal mee roteert gedurende de tweede helft van de volledige omwenteling,

waarbij de eerste helft van de omwenteling uitgevoerd wordt op een kleine afstand van de dichtstbijzijnde zijwand van het kanaal terwijl de tweede helft van de omwenteling uitgevoerd wordt op een grote afstand van de dichtstbijzijnde zijwand van het kanaal.

21. Kanaal volgens conclusie 20, waarbij het propellersysteem gefixeerd geïntegreerd is in een longitudinaal deel van het kanaal waardoor de vloeistofstroom wordt geleidt, welk longitudinaal deel een breedte tussen tegenovergelegen zijwanden van het kanaal heeft welke breedte niet meer dan 20% groter, bij voorkeur niet meer dan 10% groter, is dan de benodigde breedte om de rotatiebladen hun respectievelijke cyclische trajecten uit te laten voeren gedurende werking zonder de tegenovergelegen zijwanden te raken.

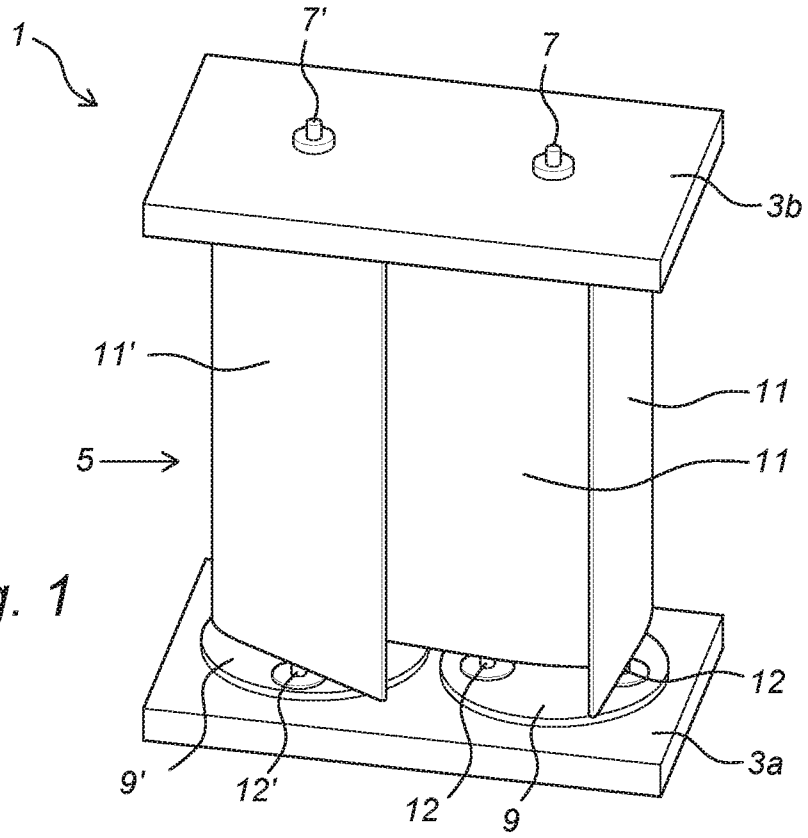

Fig. 1

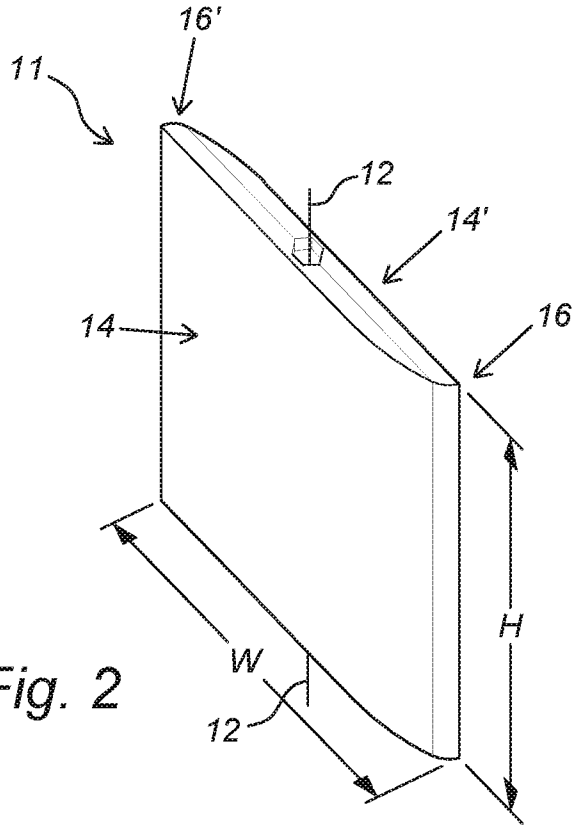

Fig. 2

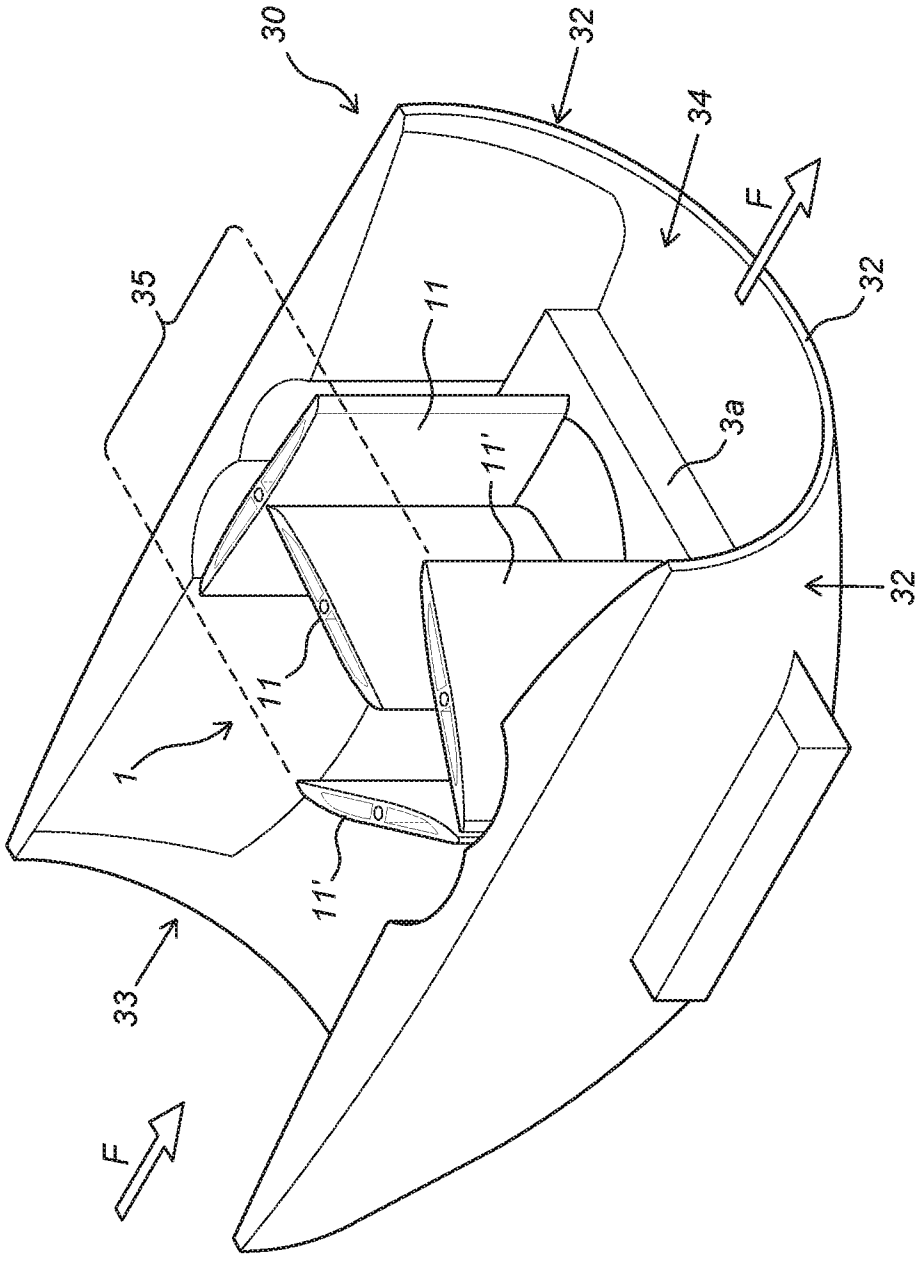

Fig. 3

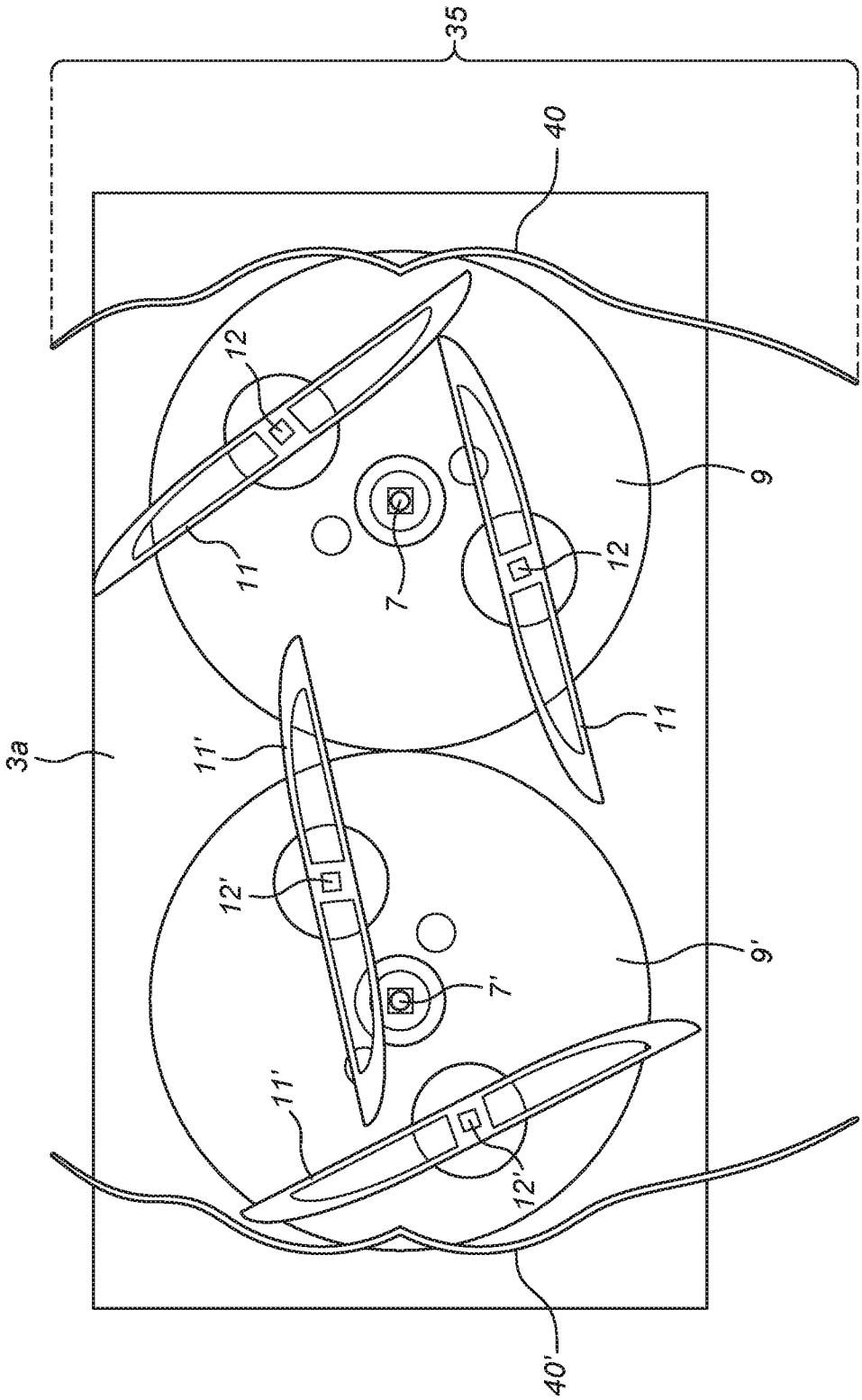

Fig. 4

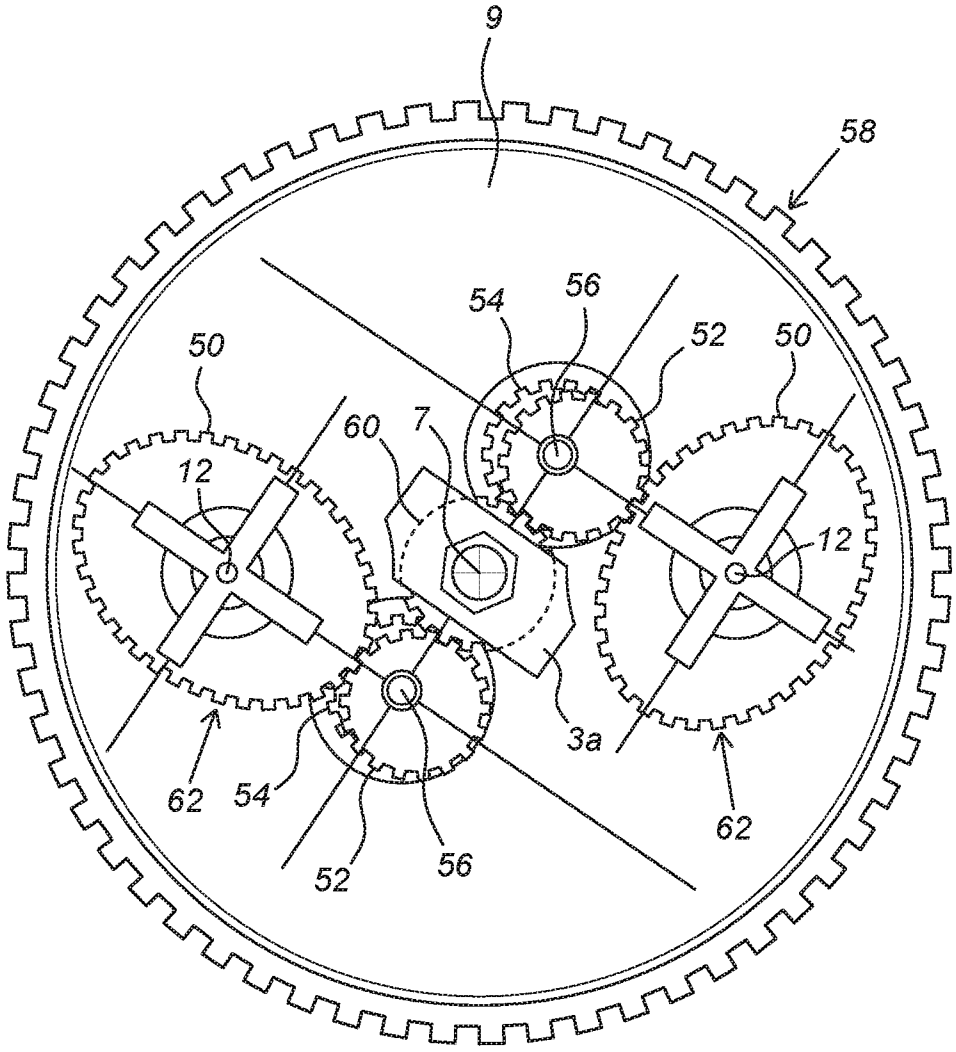

Fig. 5

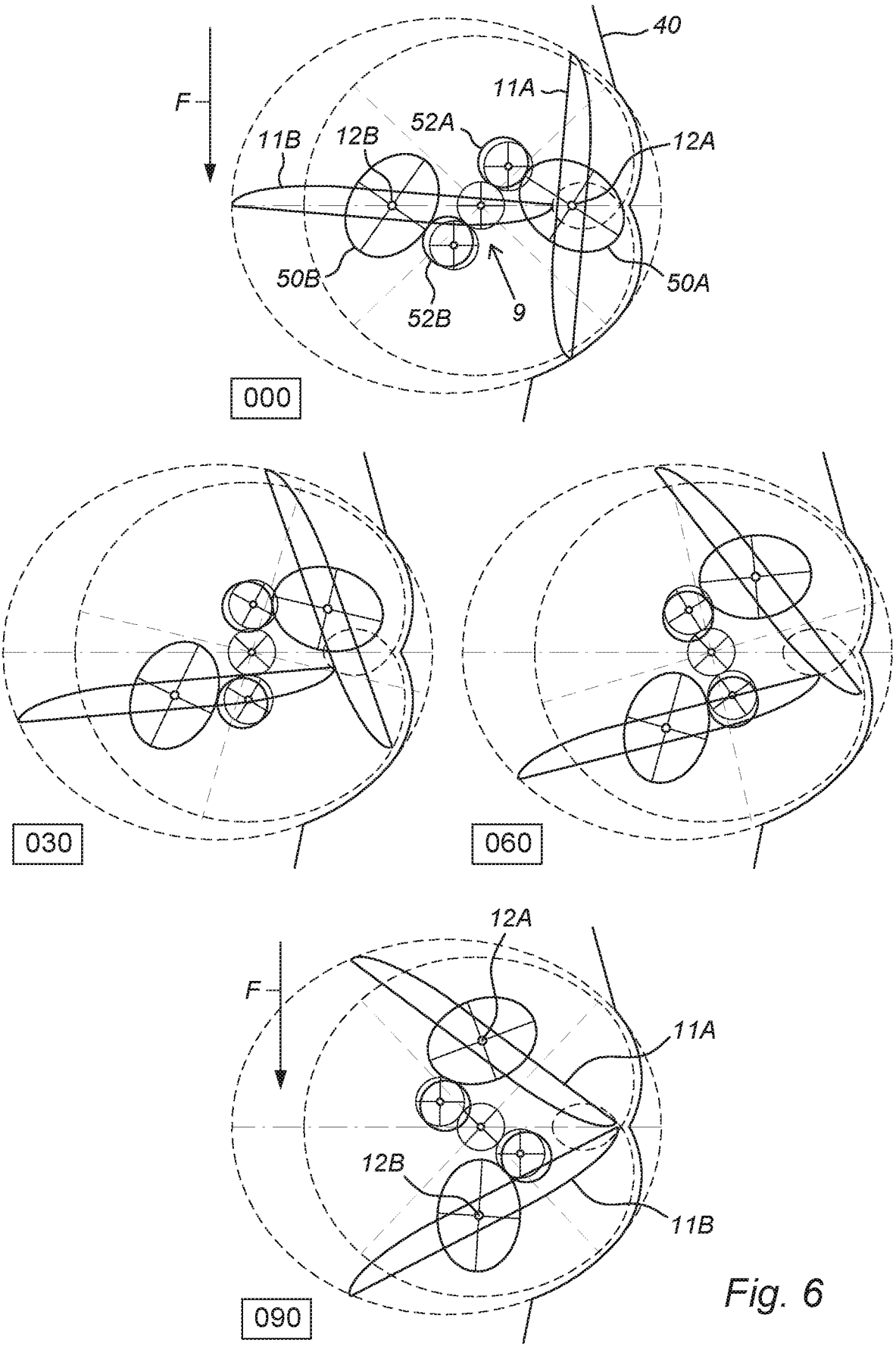
F
40
11A
52A
12A
11B
12B
50B
52B
9
50A
000
030
060
12A
F
11A
12B
11B
090

Fig. 6

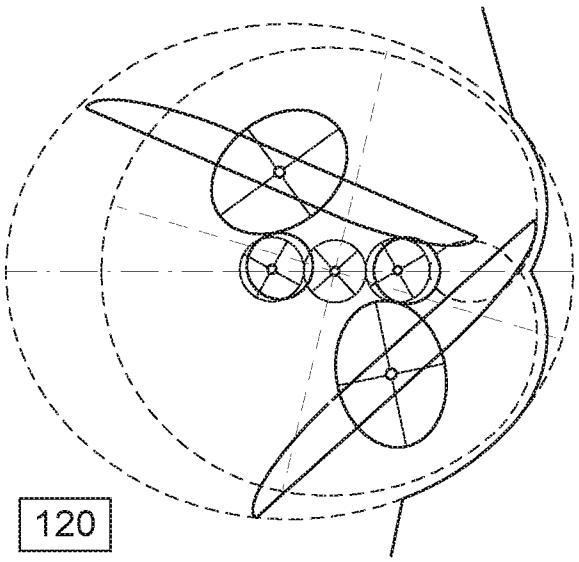

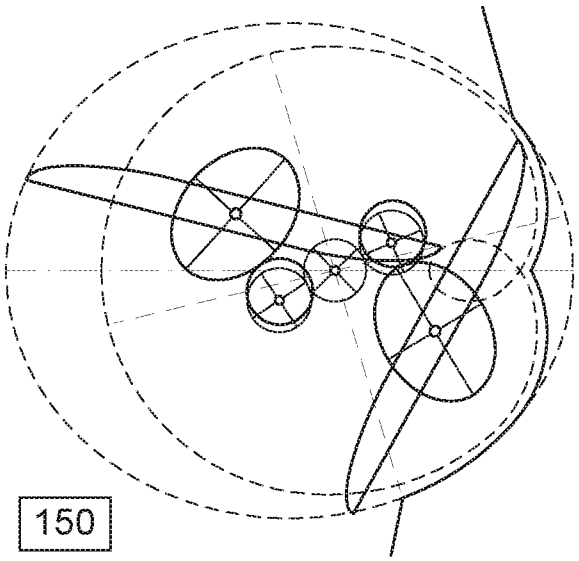

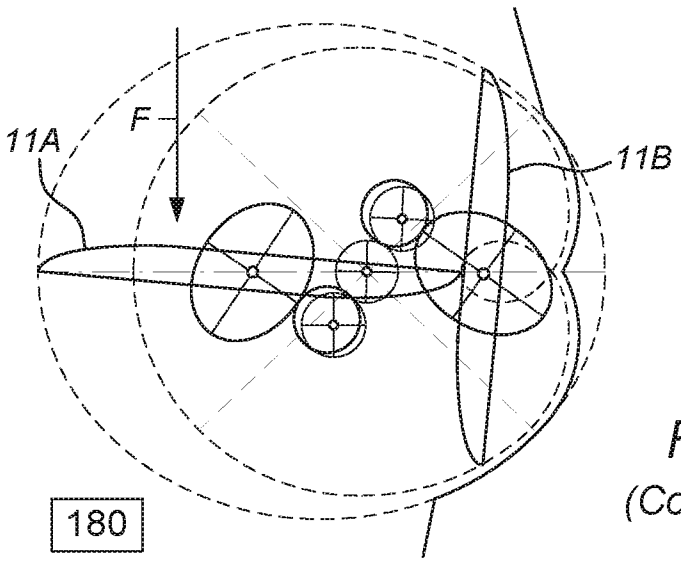

Fig. 6
(Continued)

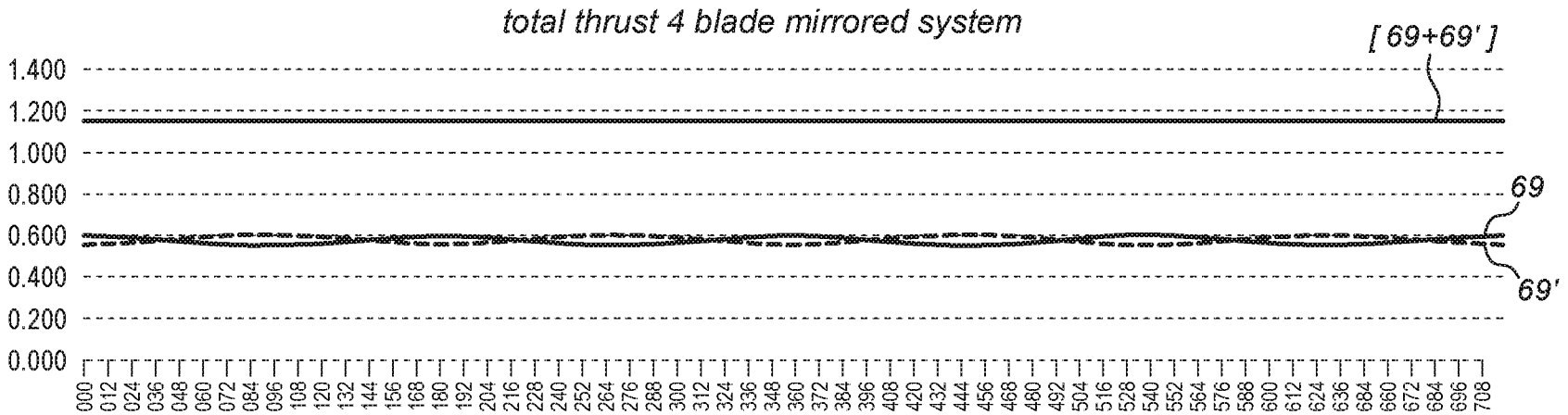
total thrust 4 blade mirrored system
[69+69']
1.400
1.200
1.000
0.800
0.600
0.400
0.200
0.000
69
69'
000 012 024 036 048 060 072 084 096 108 120 132 144 156 168 180 192 204 216 228 240 252 264 276 288 300 312 324 336 348 360 372 384 396 408 420 432 444 456 468 480 492 504 516 528 540 552 564 576 588 600 612 624 636 684 660 672 684 696 708

Fig. 7

SAMENWERKINGSVERDRAG (PCT)

RAPPORT BETREFFENDE NIEUWHEIDSONDERZOEK VAN INTERNATIONAAL TYPE

IDENTIFICATIE VAN DE NATIONALE AANVRAGE	KENMERK VAN DE AANVRAGER OF VAN DE GEMACHTIGDE
Nederlands aanvraag nr. **2032174**	Indieningsdatum **15-06-2022**
	Ingeroepen voorrangsdatum
Aanvrager (Naam) **HTP TECHNOLOGIES B.V.**	
Datum van het verzoek voor een onderzoek van internationaal type **17-09-2022**	Door de Instantie voor Internationaal Onderzoek aan het verzoek voor een onderzoek van internationaal type toegekend nr. **SN82170**

I. CLASSIFICATIE VAN HET ONDERWERP (bij toepassing van verschillende classificaties, alle classificatiesymbolen opgeven)

Volgens de internationale classificatie (IPC)

Zie onderzoeksrapport

II. ONDERZOCHTE GEBIEDEN VAN DE TECHNIEK

Onderzochte minimumdocumentatie

Classificatiesysteem	Classificatiesymbolen
IPC	**Zie onderzoeksrapport**

Onderzochte andere documentatie dan de minimum documentatie, voor zover dergelijke documenten in de onderzochte gebieden zijn opgenomen

III.	☐	**GEEN ONDERZOEK MOGELIJK VOOR BEPAALDE CONCLUSIES**	(opmerkingen op aanvullingsblad)
IV.	☐	**GEBREK AAN EENHEID VAN UITVINDING**	(opmerkingen op aanvullingsblad)

ONDERZOEKSRAPPORT BETREFFENDE HET RESULTAAT VAN HET ONDERZOEK NAAR DE STAND VAN DE TECHNIEK VAN HET INTERNATIONALE TYPE

Nummer van het verzoek om een onderzoek naar de stand van de techniek
NL 2032174

A. CLASSIFICATIE VAN HET ONDERWERP
INV. F03B17/06
ADD.

Volgens de Internationale Classificatie van octrooien (IPC) of zowel volgens de nationale classificatie als volgens de IPC.

B. ONDERZOCHTE GEBIEDEN VAN DE TECHNIEK

Onderzochte miminum documentatie (classificatie gevolgd door classificatiesymbolen)
F03B F03D

Onderzochte andere documentatie dan de mimimum documentatie, voor dergelijke documenten, voor zover dergelijke documenten in de onderzochte gebieden zijn opgenomen

Tijdens het onderzoek geraadpleegde elektronische gegevensbestanden (naam van de gegevensbestanden en, waar uitvoerbaar, gebruikte trefwoorden)
EPO-Internal, WPI Data

C. VAN BELANG GEACHTE DOCUMENTEN

Categorie °	Geciteerde documenten, eventueel met aanduiding van speciaal van belang zijnde passages	Van belang voor conclusie nr.
X A	EP 3 619 422 A1 (SZABO BALINT [HU]) 11 maart 2020 (2020-03-11) * alineas [0001], [0020] - [0029], [0033], [0036]; figuren 1,2 *	1,3-5, 11-13,20 2,6-10, 14-19,21
X A	GB 2 594 947 A (NORTH SEA WINCHES LTD [GB]) 17 november 2021 (2021-11-17) * bladzijde 1 - bladzijde 2 * * bladzijde 14 - bladzijde 16 * * figuren 3A-3F, 6A-6D,7,8B,8C *	1,3-7, 11-13,20 2,8-10, 14-19,21
X A	DE 42 16 531 A1 (LINDEN HANS B DR [DE]) 25 november 1993 (1993-11-25) * bladzijde 1 - bladzijde 2; figuren 1,2 *	1,3-7, 11-13 2,8-10, 14-21

-/--

[X] Verdere documenten worden vermeld in het vervolg van vak C.

[X] Leden van dezelfde octrooifamilie zijn vermeld in een bijlage

° Speciale categorieën van aangehaalde documenten

"A" niet tot de categorie X of Y behorende literatuur die de stand van de techniek beschrijft

"D" in de octrooiaanvrage vermeld

"E" eerdere octrooi(aanvrage), gepubliceerd op of na de indieningsdatum, waarin dezelfde uitvinding wordt beschreven

"L" om andere redenen vermelde literatuur

"O" niet-schriftelijke stand van de techniek

"P" tussen de voorrangsdatum en de indieningsdatum gepubliceerde literatuur

"T" na de indieningsdatum of de voorrangsdatum gepubliceerde literatuur die niet bezwarend is voor de octrooiaanvrage, maar wordt vermeld ter verheldering van de theorie of het principe dat ten grondslag ligt aan de uitvinding

"X" de conclusie wordt als niet nieuw of niet inventief beschouwd ten opzichte van deze literatuur

"Y" de conclusie wordt als niet inventief beschouwd ten opzichte van de combinatie van deze literatuur met andere geciteerde literatuur van dezelfde categorie, waarbij de combinatie voor de vakman voor de hand liggend wordt geacht

"&" lid van dezelfde octrooifamilie of overeenkomstige octrooipublicatie

Datum waarop het onderzoek naar de stand van de techniek van internationaal type werd voltooid	Verzenddatum van het rapport van het onderzoek naar de stand van de techniek van internationaal type
27 januari 2023	

Naam en adres van de instantie	De bevoegde ambtenaar
European Patent Office, P.B. 5818 Patentlaan 2 NL - 2280 HV Rijswijk Tel. (+31-70) 340-2040, Fax: (+31-70) 340-3016	**Lux, Ralph**

1

ONDERZOEKSRAPPORT BETREFFENDE HET RESULTAAT VAN HET ONDERZOEK NAAR DE STAND VAN DE TECHNIEK VAN HET INTERNATIONALE TYPE

Nummer van het verzoek om een onderzoek naar de stand van de techniek
NL 2032174

C.(Vervolg). VAN BELANG GEACHTE DOCUMENTEN

Categorie °	Geciteerde documenten, eventueel met aanduiding van speciaal van belang zijnde passages	Van belang voor conclusie nr.
X A	WO 93/03277 A1 (DO PRADO PEDRO PAULO MANSO [BR]) 18 februari 1993 (1993-02-18) * samenvatting; figuren 1-4 *	1,3-7, 11-13 2,8-10, 14-21

X A	US 2010/284808 A1 (PAI CHIN-LI [TW]) 11 november 2010 (2010-11-11) * samenvatting; figuren 2,4-8 *	1,3-7, 11-13 2,8-10, 14-21

X A	GB 2 448 339 A (JANSSEN ADRIAN [GB]) 15 oktober 2008 (2008-10-15) * bladzijde 21, regel 25 - bladzijde 22, regel 4 *	1-3,5-7, 11-13 8-10, 14-21

1

ONDERZOEKSRAPPORT BETREFFENDE HET RESULTAAT VAN HET ONDERZOEK NAAR DE STAND VAN DE TECHNIEK VAN HET INTERNATIONALE TYPE

Informatie over leden van dezelfde octrooifamilie

Nummer van het verzoek om een onderzoek naar de stand van de techniek

NL 2032174

In het rapport genoemd octrooigeschrift	Datum van publicatie	Overeenkomend(e) geschrift(en)	Datum van publicatie
EP 3619422 A1	11-03-2020	EP 3619422 A1	11-03-2020
		HR P20211287 T1	26-11-2021
		HU E056024 T2	28-02-2022
		PL 3619422 T3	06-12-2021
		WO 2018203183 A1	08-11-2018
GB 2594947 A	17-11-2021	GB 2594947 A	17-11-2021
		GB 2595774 A	08-12-2021
DE 4216531 A1	25-11-1993	GEEN	
WO 9303277 A1	18-02-1993	BR 9103483 A	23-03-1993
		WO 9303277 A1	18-02-1993
US 2010284808 A1	11-11-2010	TW 200940822 A	01-10-2009
		US 2010284808 A1	11-11-2010
GB 2448339 A	15-10-2008	CA 2687656 A1	23-10-2008
		EP 2176543 A2	21-04-2010
		GB 2448339 A	15-10-2008
		US 2010278647 A1	04-11-2010
		WO 2008125806 A2	23-10-2008

WRITTEN OPINION

File No.	Filing date *(day/month/year)*	Priority date *(day/month/year)*	Application No.
SN82170	15.06.2022		NL2032174

International Patent Classification (IPC)
INV. F03B17/06

Applicant
HTP TECHNOLOGIES B.V.

This opinion contains indications relating to the following items:

- ☒ Box No. I Basis of the opinion
- ☐ Box No. II Priority
- ☐ Box No. III Non-establishment of opinion with regard to novelty, inventive step and industrial applicability
- ☐ Box No. IV Lack of unity of invention
- ☒ Box No. V Reasoned statement with regard to novelty, inventive step or industrial applicability; citations and explanations supporting such statement
- ☐ Box No. VI Certain documents cited
- ☒ Box No. VII Certain defects in the application
- ☒ Box No. VIII Certain observations on the application

	Examiner
	Lux, Ralph

Application number

WRITTEN OPINION

NL2032174

Box No. I Basis of this opinion

1. This opinion has been established on the basis of the latest set of claims filed before the start of the search.

2. With regard to any **nucleotide and/or amino acid sequence** disclosed in the application, this opinion has been established on the basis of:

   a. type of material:

   ☐ a sequence listing

   ☐ table(s) related to the sequence listing

   b. format of material:

   ☐ on paper

   ☐ in electronic form

   c. time of filing/furnishing:

   ☐ contained in the application as filed.

   ☐ filed together with the application in electronic form.

   ☐ furnished subsequently for the purposes of search.

3. ☐ In addition, in the case that more than one version or copy of a sequence listing and/or table relating thereto has been filed or furnished, the required statements that the information in the subsequent or additional copies is identical to that in the application as filed or does not go beyond the application as filed, as appropriate, were furnished.

4. Additional comments:

Box No. V Reasoned statement with regard to novelty, inventive step or industrial applicability; citations and explanations supporting such statement

1. Statement

Novelty	Yes:	Claims	4, 8-10, 14-21
	No:	Claims	1-3, 5-7, 11-13
Inventive step	Yes:	Claims	8-10, 14-19, 21
	No:	Claims	1-7, 11-13, 20
Industrial applicability	Yes:	Claims	1-21
	No:	Claims	

2. Citations and explanations

see separate sheet

WRITTEN OPINION

Box No. VII Certain defects in the application

see separate sheet

Box No. VIII Certain observations on the application

see separate sheet

Re Item V

Reasoned statement with regard to novelty, inventive step or industrial applicability; citations and explanations supporting such statement

Reference is made to the following documents:

D1	EP 3 619 422 A1 (SZABO BALINT [HU]) 11 maart 2020 (2020-03-11)
D2	GB 2 594 947 A (NORTH SEA WINCHES LTD [GB]) 17 november 2021 (2021-11-17)
D3	DE 42 16 531 A1 (LINDEN HANS B DR [DE]) 25 november 1993 (1993-11-25)
D4	WO 93/03277 A1 (DO PRADO PEDRO PAULO MANSO [BR]) 18 februari 1993 (1993-02-18)
D5	US 2010/284808 A1 (PAI CHIN-LI [TW]) 11 november 2010 (2010-11-11)
D6	GB 2 448 339 A (JANSSEN ADRIAN [GB]) 15 oktober 2008 (2008-10-15)

1 The present application does not meet the criteria of patentability, because the subject-matter of claim 1 is not new.

D1 discloses (the references in parenthesis applying to this document):

a propellor system which is suitable for kinetic interaction with a fluid that flows unidirectionally through a channel (§34), wherein the propellor system comprises a supporting body (11) which is configured to be integrated within the channel in a fixed position, and a kinetic interaction system which is provided on the supporting body such that the kinetic interaction system extends in an interior area of the channel when the supporting body is integrated in the fixed position (figure 1), wherein the kinetic interaction system includes

a single rotatory blade (2), which is provided in such a way that:
- the rotatory blade has a planar shape (figure 1) comprising two opposite, operational surfaces which are designed for kinetic interaction with a fluid flow (§1);
- the rotatory blade comprises a respective blade axis (4) over which the rotatory blade is rotatable, and a respective blade gearing (6) which is drivingly engaged to the blade axis (§§20, 29; figure 2);

- the rotatory blade is rotatably mounted by means of its blade axis onto one side of a common wheel (7), wherein the common wheel comprises a wheel axis (9) over which the common wheel is rotatable (§27), and wherein the blade axis is mounted onto the common wheel at a position which is eccentric to the wheel axis (figure 2),
- the common wheel is rotatably connected to the supporting body by virtue of the wheel axis (figure 1), and is drivingly connected to a wheel gearing (13);
- the rotation of the common wheel drives the blade gearing in order to rotate the blade axis;
- the configuration of the kinetic interaction system is such that the blade axis and the wheel axis have a similar, or parallel, direction to each other (figures 1 and 2);
- during operation of the propellor system, the rotation of the common wheel in combination with the simultaneous rotation of the rotatory blade over its blade axis results in a combinatory rotation being performed by the rotatory blade, wherein the rotatory blade follows a cyclic trajectory per revolution of the common wheel (§36: the blade performs a cyclic trajectory with respect to the common wheel).

Notes

- "including" is interpreted as "comprising": a system including a single blade does not exclude the presence of further (single) blades.

- claim 1 refers to a propellor system with a kinetic interaction system which is suitable for extending in an interior area of the channel. The channel is not part of the scope of claim 1 and the expression "kinetic interaction system ... [extending] in an interior area of the channel" merely claims a kinetic interaction system.

Thus, all features of claim 1 are known from D1.

The subject-matter of claim 1 is also known from D2-D6 (see cited passages of the documents in the search report).

2 Dependent claims 2-7, 11-13 and 21 do not appear to contain any additional features which, in combination with the features of any claim to which they refer, meet the requirements of novelty and/or inventive step.

2.1 D1 shows the subject-matter of claim 3 (figure 1), claim 5 (figure 2), claim 11 (figure 2), claim 12 (figure 1), claim 13 (figure 1).

2.2 D2 shows the subject-matter of claim 3 (figure 3A), claims 5-7 (figure 6A), claim 11 (figure 7), claim 12 (figure 3A), claim 13 (figures 3D, 6A).

Moreover, the subject-matter of claim 20 seems to be obvious to the skilled person starting from D2 (figures 6A-6E).

2.3 Also D3-D5 show the subject-matter of claims 3, 5-7 and 11-13 (see cited passages).

2.4 D6 shows the subject-matter of claim 2 (page 21, line 25 - page 22, line 4), claim 3, claims 5-7 and claims 11-13 (figure 13).

2.5 The subject-matter of claim 4 is merely one of several straightforward possibilities from which the skilled person would select, in accordance with circumstances, without the exercise of inventive skill, in order to solve the problem posed (see for example D3: column 2, lines 25-31; D4: page 5, lines 1-8).

3 The combination of the features of dependent claim 8-10, 14-19 and 21 is neither known from, nor rendered obvious by, the available prior art

The skilled person does not find any hint the cited documents to include the subject-matter of the claims in any of the therein shown propellor systems.

Re Item VII

Certain defects in the application

1 The relevant background art disclosed in D1-D6 is not mentioned in the description, nor are these documents identified therein.

2 Independent claim 1 is not in the two-part form, which in the present case would be appropriate, with those features known in combination from the prior art being placed in the preamble and the remaining features being included in the characterising part.

3 The features of the claims are not provided with reference signs placed in parentheses.

Re Item VIII

Certain observations on the application

The claims are not clear.

1 Claim 3 refers to "two rotary blades". However, in claim 1, option ii), just one blade ("single rotary blade") is present. It is therefore not clear wether claim 3 refers back to other claims only under the condition that option i) is chosen and what is the scope of the claim if not.

An analogous objection as above is raised for claim 5, claims 6-7 and claims 14-16.

2 Claim 2 and claims 8-10 are using "the blade". Analogously as formulated in the objection above, it is not clear how the option of a presence of multiple rotary blades in claims to which is referred to can be then interpreted.

3 The part "A propellor system which is suitable for kinetic interaction with a fluid that flows unidirectionally through a channel ... the propellor system comprises... a kinetic interaction system ... [extending] in an interior area of the channel ..." of claim 1 defines a propeller system and does not claim (parts of) a channel. It is therefore not clear, how "a kinetic interaction system which is provided on the supporting body such that the kinetic interaction system extends in an interior area of the channel" differs from simply a kinetic interaction system on the supporting body.