(No Model.)

# J. W. ROUNKLES.

## CARPET STRETCHER.

No. 456,432. Patented July 21, 1891.

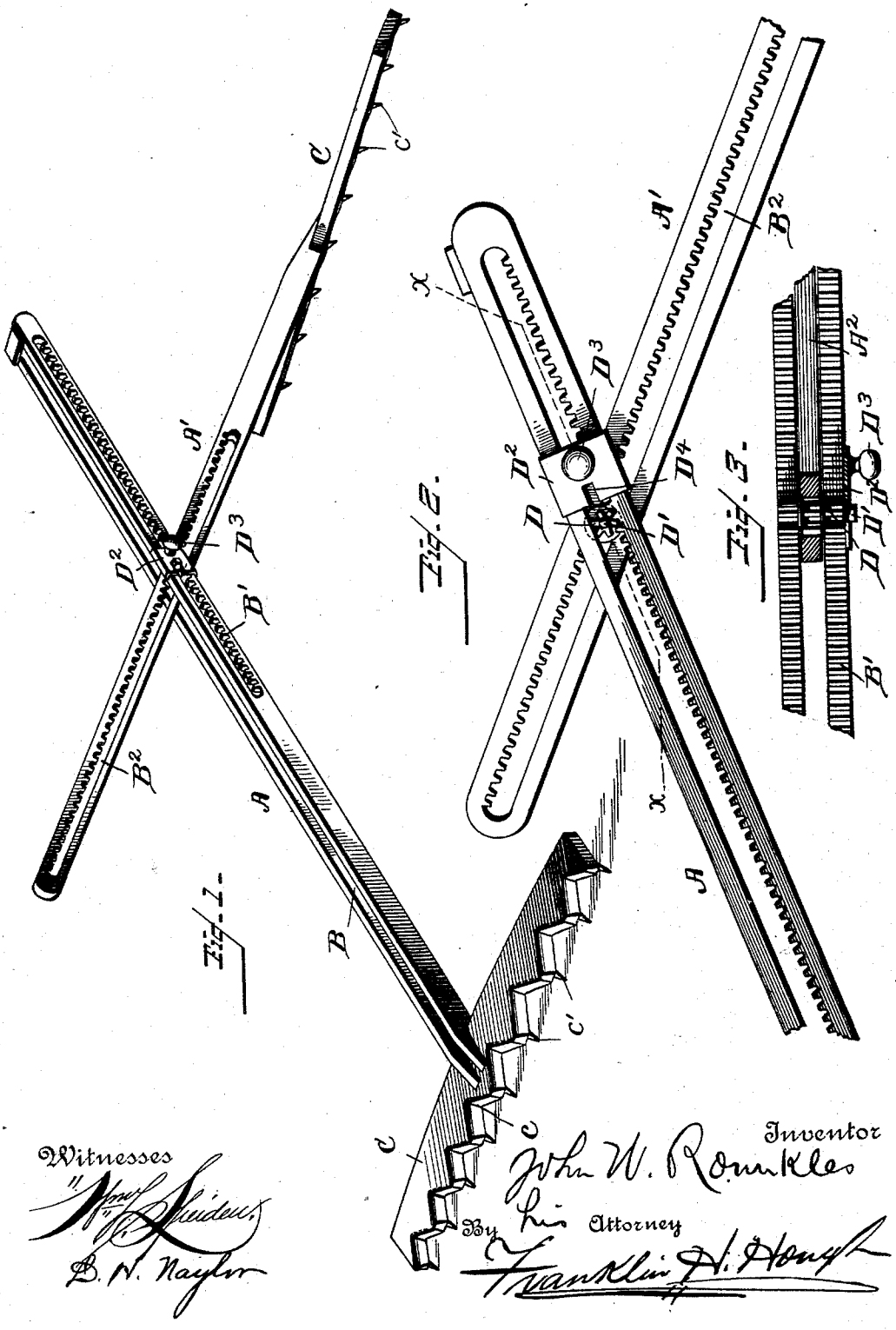


Witnesses

Wm. J. Sheidell

B. H. Naylor

Inventor

John W. Rounkles

By his Attorney

Franklin H. Hough

THE NORRIS PETERS CO., PHOTO-LITHO., WASHINGTON, D. C.

# UNITED STATES PATENT OFFICE.

JOHN WALTER ROUNKLES, OF FARMINGTON, IOWA.

## CARPET-STRETCHER.

SPECIFICATION forming part of Letters Patent No. 456,432, dated July 21, 1891.

Application filed May 23, 1891. Serial No. 393,853. (No model.)

*To all whom it may concern:*

Be it known that I, JOHN WALTER ROUNKLES, a citizen of the United States, residing at Farmington, in the county of Van Buren and State of Iowa, have invented certain new and useful Improvements in Carpet-Stretchers; and I do declare the following to be a full, clear, and exact description of the invention, such as will enable others skilled in the art to which it appertains to make and use the same, reference being had to the accompanying drawings, and to the letters of reference marked thereon, which form a part of this specification.

This invention relates to certain new and useful improvements in carpet-stretchers, and it has for its object to provide a simple and effective device of the character described, which will serve to stretch and hold the carpet in place while it is being tacked to the floor.

The essential feature of the invention resides in the construction of the bars or strips which bear the hooks or points which are designed to engage the carpet, and which are so formed as to permit the carpet to be stretched closely against the side wall of the apartment, and while so holding the carpet in place permit the tacks to be driven in the extreme edge of the carpet without the necessity of releasing the tension of the stretcher.

Another essential feature of the invention resides in the construction and arrangement of the pivotedly connected operating-levers to which the stretcher-heads are attached, the same being so constructed as to render the adjustment easy and positive.

To these ends and to such others as the invention may pertain the same consists in the peculiar construction and in the novel combination, arrangement, and adaptation of parts, all as more fully hereinafter described, shown in the accompanying drawings, and then specifically defined in the appended claim.

The invention is clearly illustrated in the accompanying drawings, which, with the letters of reference marked thereon, form a part of this specification, like letters of reference indicating like parts throughout the several views, in which—

Figure 1 is a perspective view of a carpet-stretcher embodying my improvements. Fig. 2 is a similar view upon an enlarged scale of the pivoted levers. Fig. 3 is an enlarged detail upon the line $x\ x$ of Fig. 2.

Reference now being had to the details of the drawings by letter, A and A′ designate two beam-levers. The lever A is provided with a vertical slot, which runs substantially the entire length of the lever, as shown at B. Each of the said levers A and A′ is provided at its outer end with a stretcher-head C, which at its outer edge is provided with a series of notches $c$, and at the ends of the points separating said notches pins or points $c'$ are provided, which points are inclined downwardly and serve to engage the carpet, as will be readily understood. The lever A is provided with a horizontal slot B′, the lower edge of which is provided with a rack-bar, as shown. The lever A′ is placed within the vertical slot B of the lever A, said lever A′ being provided with a slot $B^2$, in all respects similar to the slot B′ in the lever A, excepting that the slot is provided with a rack-bar, which extends along the upper edge of the slot instead of along the lower edge, as is the case with the lever A.

D is a pinion, which engages the teeth of the rack-bars upon the levers A and A′, as shown. The shaft or axle of said pinion extends for a short distance beyond the side edge of the lever A, and this extended end is squared, as shown at D′.

$D^2$ is a metallic case, which is fitted over the lever A, and is adapted to be moved thereon freely by the knob or handle $D^3$. This case is provided with a slot $D^4$, which, when the case is moved against the pinion, engages the squared end D′ of the same and locks the same against rotation.

The operation of the device will be readily understood. The teeth or points $c'$ upon the stretcher-head are engaged with the carpet. The case $D^2$ is moved so as to disengage it from the axle of the pinion and allow the same to rotate, when the levers A and A′ may be drawn apart for a sufficient distance, when the case $D^2$ is again moved into engagement with the axle, locking the same again against rotation. The levers are now forced downward, the teeth upon the lever A′ moving over the notches upon the locked pinion, and the car-

pet is thus stretched into place, the notches in the stretcher-heads serving to permit the tacks to be driven without necessitating the removal of the stretcher.

Having thus described my invention, what I claim to be new, and desire to secure by Letters Patent, is—

The combination, with the heads provided with pins or hooks to engage the carpet, the levers A and B, connected therewith and slotted, as described, the pinion D on an axle provided with a square head engaging rack-bars within the slots of the levers, of the movable case $D^2$ upon one of the levers and adapted to engage the end of the axle of the pinion and lock the same against rotation, substantially as and for the purpose described.

In testimony whereof I affix my signature in presence of two witnesses.

JOHN WALTER ROUNKLES.

Witnesses:

WM. GOODIN,

MERCHANT STODDARD.