PCT WORLD INTELLECTUAL PROPERTY ORGANIZATION
International Bureau

INTERNATIONAL APPLICATION PUBLISHED UNDER THE PATENT COOPERATION TREATY (PCT)

(51) International Patent Classification 6 : B32B 27/10, A47B 21/03

A1

(11) International Publication Number: **WO 97/00170**

(43) International Publication Date: 3 January 1997 (03.01.97)

(21) International Application Number: PCT/US96/06478

(22) International Filing Date: 7 May 1996 (07.05.96)

(30) Priority Data:
08/490,464 14 June 1995 (14.06.95) US

(71) Applicant: MINNESOTA MINING AND MANUFACTURING COMPANY [US/US]; 3M Center, P.O. Box 33427, Saint Paul, MN 55133-3427 (US).

(72) Inventors: WOLF, Robert, J.; P.O. Box 33427, Saint Paul, MN 55133-3427 (US). PURRINGTON, Scott, M.; P.O. Box 33427, Saint Paul, MN 55133-3427 (US). BRANDNER, John, M.; P.O. Box 33427, Saint Paul, MN 55133-3427 (US). OLSON, David, A.; P.O. Box 33427, Saint Paul, MN 55133-3427 (US). REED, John, F.; P.O. Box 33427, Saint Paul, MN 55133-3427 (US).

(74) Agents: BOND, William, J. et al.; Minnesota Mining and Manufacturing Company, Office of Intellectual Property Counsel, P.O. Box 33427, Saint Paul, MN 55133-3427 (US).

(81) Designated States: AL, AM, AT, AU, AZ, BB, BG, BR, BY, CA, CH, CN, CZ, DE, DK, EE, ES, FI, GB, GE, HU, IS, JP, KE, KG, KP, KR, KZ, LK, LR, LS, LT, LU, LV, MD, MG, MK, MN, MW, MX, NO, NZ, PL, PT, RO, RU, SD, SE, SG, SI, SK, TJ, TM, TR, TT, UA, UG, UZ, VN, ARIPO patent (KE, LS, MW, SD, SZ, UG), Eurasian patent (AM, AZ, BY, KG, KZ, MD, RU, TJ, TM), European patent (AT, BE, CH, DE, DK, ES, FI, FR, GB, GR, IE, IT, LU, MC, NL, PT, SE), OAPI patent (BF, BJ, CF, CG, CI, CM, GA, GN, ML, MR, NE, SN, TD, TG).

Published
With international search report.
Before the expiration of the time limit for amending the claims and to be republished in the event of the receipt of amendments.

(54) Title: POLYURETHANE PAD COVERING

(57) Abstract

A barrier fabric laminate for use as a coating for a gel filled article is provided. The barrier fabric laminate comprises a fluid impermeable film (17) and a polyurethane nonwoven web (3) which has a friction value of less than 200 g and a fabric hand of less than 200 g. The polyurethane web is formed of fibers of less than about 50 μm on average and preferably is formed with a fluorochemical melt additive by sequentially melt blowing the polyurethane web on a heated collecting drum (5) and laminated by a nip (4) formed by a heated nip roller (6) and the collecting drum.

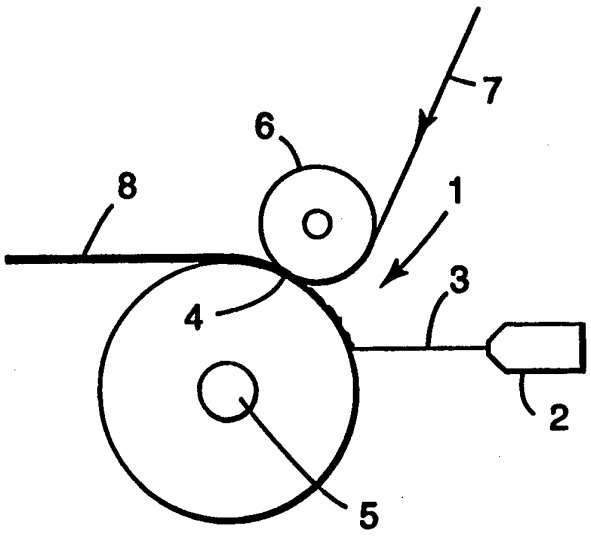

FOR THE PURPOSES OF INFORMATION ONLY

Codes used to identify States party to the PCT on the front pages of pamphlets publishing international applications under the PCT.

AM	Armenia	**GB**	United Kingdom	**MW**	Malawi
AT	Austria	**GE**	Georgia	**MX**	Mexico
AU	Australia	**GN**	Guinea	**NE**	Niger
BB	Barbados	**GR**	Greece	**NL**	Netherlands
BE	Belgium	**HU**	Hungary	**NO**	Norway
BF	Burkina Faso	**IE**	Ireland	**NZ**	New Zealand
BG	Bulgaria	**IT**	Italy	**PL**	Poland
BJ	Benin	**JP**	Japan	**PT**	Portugal
BR	Brazil	**KE**	Kenya	**RO**	Romania
BY	Belarus	**KG**	Kyrgystan	**RU**	Russian Federation
CA	Canada	**KP**	Democratic People's Republic of Korea	**SD**	Sudan
CF	Central African Republic			**SE**	Sweden
CG	Congo	**KR**	Republic of Korea	**SG**	Singapore
CH	Switzerland	**KZ**	Kazakhstan	**SI**	Slovenia
CI	Côte d'Ivoire	**LI**	Liechtenstein	**SK**	Slovakia
CM	Cameroon	**LK**	Sri Lanka	**SN**	Senegal
CN	China	**LR**	Liberia	**SZ**	Swaziland
CS	Czechoslovakia	**LT**	Lithuania	**TD**	Chad
CZ	Czech Republic	**LU**	Luxembourg	**TG**	Togo
DE	Germany	**LV**	Latvia	**TJ**	Tajikistan
DK	Denmark	**MC**	Monaco	**TT**	Trinidad and Tobago
EE	Estonia	**MD**	Republic of Moldova	**UA**	Ukraine
ES	Spain	**MG**	Madagascar	**UG**	Uganda
FI	Finland	**ML**	Mali	**US**	United States of America
FR	France	**MN**	Mongolia	**UZ**	Uzbekistan
GA	Gabon	**MR**	Mauritania	**VN**	Viet Nam

POLYURETHANE PAD COVERING

Background and Field of the Invention

This invention relates to the field of elastic or conformable nonwoven fabrics and laminates designed for use in low friction applications.

Gel filled supports are used in a variety of devices where the supports can come into direct contact with a person's skin. The gel is typically a solid tacky viscoelastic material. The solid gel typically contains low molecular weight components that can separate from the gel. As such, generally these gels should be contained in a fluid impermeable barrier layer. This barrier layer should also be soft and conformable and preferably has a very low friction surface, is soil resistant, has high abrasion resistance and adequate tear and puncture resistance. In copending application serial No. 08/253,510, filed on June 3, 1994 there is proposed for a gel-filled wrist support, the use of a polyurethane film as a barrier layer. The barrier film covered gel can then further be wrapped in an outer layer for comfortable contact with the person's wrists. For this outer layer there is proposed a polyurethane non-woven, leather, vinyl, "Dacron" or "Ultrilure". These outer layer materials are wrapped around the barrier film gel pad. Although this is advantageous in many respects, there is a considerable need for a barrier outer layer material with greater strength, soil resistance, abrasion resistance, lower friction and ease of use.

Elastomeric polyurethanes have been proposed in other uses which may require skin contact. In U.S. Patent No. 4,660,228 a glove is formed by two elastic sheet materials that are simultaneously die cut and heat sealed along the periphery to form the glove. One of

the glove layers is an elastic polyurethane nonwoven fabric formed by a melt-spinning or melt blowing process. In U.S. Patent No. 4,777,080 a low abrasion resistant elastic sheet such as a melt blown ethylene vinyl acetate nonwoven is joined to a high abrasion resistant sheet such as a melt blown polyetherurethane nonwoven as the outer layer forming a high abrasion resistant laminate. The higher abrasion resistant sheet laminate is apparently designed for use in apparel applications such as diapers or mattress pads. U.S. Patent No. 4,565,736 describes a surgical compress with a fibrous polyurethane cover layer and an absorbent layer. U.S. Patent No. 4,414,970 describes an elastic film, such as a polyurethane film, inner layer covered by two nonwoven fabric layers. U.S. Patent No. 5,230,701 describes a nonwoven elastomeric web for use in a wound dressing or adhesive bandage. The adhesive bandage backing layer is an elastomeric polyurethane microfiber web.

Summary of the Invention

The invention is directed to a laminate for use as a barrier layer covering for a gel filled support article or the like. The laminate comprises a microfibrous elastic polyurethane nonwoven web laminated to a fluid impervious film barrier layer. The elastic polyurethane web is preferably joined to the film layer while in an untensioned state in a heated calendering nip such that substantially the entire polyurethane web is partially consolidated and laminated to the film layer. To ensure proper lamination the polyurethane web and the film layer should be heat sealable to each other, however a third heat sealable adhesion layer could also be used.

The elastic polyurethane nonwoven layer is formed of an elastomeric polyurethane which is in the form of a nonwoven elastic web of elastomeric polyurethane fibers. The individual polyurethane fibers have an average fiber diameter of less than about 50 microns, which fibers are preferably formed by a melt blowing process. The basis weight of the nonwoven elastic web is generally about 20 to 1000 g/m^2, preferably 70 to 150 g/m^2. The fibers of the web prior to calendering are randomly arranged and generally autogeneously bonded. The outer surface of the elastic web following calendering has a friction value of less than 200 g, preferably less than 150 g. The outer surface of the elastic web also has resistance to fiber pilling and is soft to the touch.

The film barrier layer can be any film that is conformable and can be heat sealed to the polyurethane web either directly or by a suitable adhesion or bonding layer. The composite laminate of the film barrier layer and the polyurethane nonwoven web is conformable having a fabric hand of less than 200g, preferably less than 100g.

A further aspect of the invention is improvement in soil resistance by use of a fiber treatment to give oil and water repellency. Preferred fiber treatments are fluorochemical compositions that can be applied to the fibers in the form of a spray, immersion bath or the like. A most preferred fluorochemical is a melt additive included in with the polyurethane during extrusion.

The fibrous web and the barrier film of the laminate are preferably substantially continuously bonded by the calendering nip, however, pattern bonding is not excluded. Generally, at least 10% of the surface area of the laminate is bonded by the calendering nip, preferably at least 70%. However, with pattern bonding,

the unlaminated area between adjacent laminated areas is at most about 1 cm wide, preferably less than 0.5 cm wide.

The invention also is directed at a method of preparing the above laminate by providing a microfibrous elastic polyurethane nonwoven web into a nip with a barrier film layer and laminating the two under heat and pressure. The nip temperature is sufficient to create a bond between the nonwoven web and the film layer. This is generally at least 100°C for the preferred polyurethane film layer. On the nonwoven web face the nip roll is generally at least about 60°C, preferably at least at least about 65°C. The nip pressure is preferably about 0.36 kg/cm to 3.57 kg/cm, preferably 0.46 kg/cm to 2.04 kg/cm.

Brief Description of the Drawings

Fig. 1 is a schematic view of the process for forming the invention laminate.

Fig. 2 is a cross-sectional view of a gel filled body using the invention laminate.

Detailed Description of the Preferred Embodiments

The nonwoven elastic polyurethane webs are preferably formed by a melt blowing process such as that described in Wente, Van A., "Superfine Thermoplastic Fibers", in Industrial Engineering Chemistry, Vol. 48, pages 1342 et seq. (1965) or in Report No. 4364 of the Naval Research Laboratories published May 25, 1964 entitled "Manufacture of Superfine Organic Fibers" by Wente, Van A. et al., except that a drilled die is preferably used. The average fiber diameter of those melt blown fibers is generally less than 25 microns, preferably less than 10 microns. The thermoplastic polyurethane elastomer is extruded from the die 2 as

shown in Fig. 1 and preferably forms into a web 3 between the die orifice and the collection surface by autogenious bonding of the fibers.

In Fig. 1, a preferred arrangement is shown where the fibrous melt blown web is collected on a smooth drum 5 and on that collection drum subsequently laminated to a barrier film 7 by a nip 4 created by a second heated roller 6. Alternatively, in a second embodiment, the fibrous polyurethane web could be formed in a prior process, collected and then unrolled and brought into contact with a barrier film in a heated nip. In this second embodiment the polyurethane web could be preheated.

The polyurethane nonwoven web is elastic such that when stretched by at least about 25 percent and more it will recover at least 40 percent and preferably at least 60 percent, most preferably at least 85 percent, when the elongation force is removed. The elastic web preferably has an elongation at break of at least about 250 percent, more preferably at least 400 percent. Preferred nonwoven polyurethanes include those disclosed in U.S. Patent No. 4,777,080, the substance of which is incorporated by reference.

The barrier film to which the polyurethane elastic nonwoven web is laminated is also preferably elastic, as defined above for the elastic nonwoven web. However, the barrier film can be nonelastic (i.e., recover by less than 40 percent when stretched by 25 percent or more) but extensible as long as the laminate is elastic as is defined above and the laminate elongation to break of at least about 100 percent, preferably at least 150 percent.

The barrier film can be any film that can be heat sealed to the polyurethane nonwoven web either directly or by a suitably selected intermediary layer. The

barrier film must also provide fluid holdout with respect to the gel or the gel components and also, preferably, prevent liquid migration into the gel. A thermoplastic film is preferred with a polyurethane film being most preferred in terms of its inert behavior to the preferred gels, its elastomeric properties and its heat sealability to the polyurethane nonwoven web. The barrier film is generally about 0.018 to 0.5 mm thick, preferably 0.02 to 0.05 mm. The barrier film can be a single layer film or multi-layer film or a film coated laminate, e.g., to another nonwoven other than the polyurethane nonwoven. In the case of a multi-layer film, the individual layers can be identical or different polymers. The outer layer of a multi-layer film is preferably heat sealable to the polyurethane nonwoven web.

The gel can be any stable viscoelastic material such as the elastomeric block copolymer gels described in U.S. Patent No. 3,676,387, the substance of which is incorporated herein by reference, or U.K. Patent No. 1,268,431. These gels comprise synthetic block copolymer elastomers tackified by an oil in a ratio of about 4:1 to 15:1 oil to block copolymer. The block copolymers could be Kraton™ or like elastomeric materials which are formed by alternating blocks of a polyalkenyl aromatic, such as polystyrene, and a polyalkadiene such as polyisoprene, polybutadiene or hydrogenated versions thereof.

The polyurethane nonwoven web preferably is treated with a fluorochemical compound to increase oil and water repellency. Preferred fluorochemicals for use as a polymer melt additive are the fluorochemical oxazolidinones, such as those disclosed in U.S. Patent No. 5,022,052 the substance of which is incorporated herein by reference. The polyurethane can contain from

0.25 to 3.0 weight percent, preferably 0.75 to 1.25 weight percent of a fluorochemical, such as the oxazolidinones, as a melt additive.

The polyurethane nonwoven web is generally joined to the barrier layer in the nip at a temperature of from about 60°C to 200°C and a pressure of about 0.36 kg/cm to 3.57 kg/cm. One or both nip rolls can be heated, preferably the roll 5 in contact with the polyurethane nonwoven is smooth and heated to a temperature of from 60°C to 150°C when a fluorochemical melt additive is included in the polyurethane fiber. If this roll is a collector roll for the polyurethane as a melt blown web, as in the preferred embodiment shown in Fig. 1, heating the roll provides superior abrasion resistance for the laminate when a fluorochemical melt additive is included in the fiber.

The surface of the nip roll in contact with the polyurethane web is generally both smooth and continuous, however, it can have lands and valleys where pattern bonding is contemplated, however in this case, the lands preferably contact at least 10% of the web.

The roll 6 in contact with the film barrier layer is also preferably smooth such as a steel roll. The temperature in the nip should be such that the polyurethane fibers are not fused into a film so that the web retains its open fibrous structure allowing for a limited amount of heat and/or moisture transport through the fibrous web structure.

Where a heat bonding or adhesive layer is used between the polyurethane nonwoven web and the barrier film layer, this can be a separate film, nonwoven layer or coating. If a film or nonwoven bonding layer is used this would be brought in between the polyurethane nonwoven web and the barrier film layer by conventional means. A coating can be applied by spray coating, knife

coating, gravure, Meyer bar or the like as a continuous or intermittent pattern, applied to either the polyurethane nonwoven and/or the barrier film layer.

The gel filled article can be formed by any conventional means. As shown in Fig. 2 a mass of gel 19 is surrounded by an invention laminate 18 of the outer polyurethane nonwoven web 13 and the film barrier layer 17. This could be formed by creating a elongated tube 10 of the laminate with a longitudinal seam 12 and two end seams (not shown). The tube could surround a previously formed mass of gel or the gel could be injected into the tube at one of the seams prior to the seam being finally sealed. The laminate could also be formed over a rigid base and sealed to the base along a peripheral edge thereof. The base could then be provided with suitable access holes for injection of a gel or the gel previously associated with the base. The gel height over the base is at least 0.3 cm, preferably at least 0.75 cm. The gel filled articles could be used as pads for use in beds, wheel chairs, bike seats, or preferably wrist rests for placement in front of a keyboard or mouse. The pad provides a smooth, comformable surface which supports the wrist and allows the hands to move in a generally circular area with diameter of about 1 cm, preferably at least 3.0 cm, without sliding the wrist and also permits easy movement across the pad by virtue of its low friction value. The pad could be formed into any suitable shape by use of suitably formed laminate in conjunction with rigid supports as needed.

EXAMPLES

Abrasion Resistance

The abrasion resistance of the laminated webs of the invention was evaluated using a Taber Abrasion Tester (available from Taber Industries, North Tonawanda, NY) and a modified test procedure. Test samples were mounted on the standard S-36 Specimen Mounting Card and exposed to 100 wear cycles using CS-0 wheels and a 250 g load. The abrasion resistance of the sample was subjectively evaluated by noting the degree of "pilling" and "roping" of the melt blown (BMF) web as well as the degree of delamination of the BMF web from the polyurethane film.

Fabric Hand

Fabric hand was evaluated using a Model 211-300 Handle-O-Meter (available from Thwing-Albert Instrument Co., Philadelphia, PA) following the manufacturer's suggested procedure and a 0.64 cm gap setting. The data is reported as an average of four data points, two in the machine direction and two in the cross machine direction. Hand data for fabrics similar to those used on commercially available wrist rests (e.g., textured vinyl, woven polyester (PET) fabric, and a suede-like fabric) are also reported for comparative purposes.

Friction Value

The "friction value" of the laminated webs of the invention as well as that of unlaminated BMF webs and covering materials similar to those used on competitive wrist rests was evaluated using a IMAAS Slip/Peel Tester (available from Instruments, Inc., Dayton, OH). Friction values of the various materials against the rubber coated sled were determined using the test

apparatus and procedures described by the equipment manufacturer with the sample holder traversing beneath the sled at a rate of approximately 229 cm/min. The average force in grams was determined for the first two seconds of travel. Fabric samples were tested in both the machine and cross machine directions. Friction values of fabrics similar to those used on commercially available wrist rests (e.g., textured vinyl, woven polyester fabric, and a suede-like fabric) are also reported for comparative purposes.

Tensile Strength

Tensile strengths were determined using test specimens 2.54 cm in width and 8.9 cm in length and a Chatillion Tensile Tester (available from Chatillion, John & Sons, Inc., Greensboro, NC) which was operated with a jaw gap of 5.1 cm and a cross-head speed of 25.4 cm/min.

BLOWN MICROFIBER (BMF) WEB PREPARATION

Elastomeric, nonwoven, melt blown microfiber webs were prepared using a thermoplastic elastomeric polyurethane (PS440-200, a polyesterurethane, available from Morton International, Inc., Seabrook, NH) using a process similar to that described in Wente, Van A., "Superfine Thermoplastic Fibers" in Industrial and Engineering Chemistry, Vol. 48, pages 1342 et seq. (1965) or in Report No. 4364 of the Naval Research Laboratories, published May 25, 1964 entitles "Manufacture of Superfine Organic Fibers" by Wente, Van. A., Boone, C.D., and Fluharty, E.L. except that the melt blowing die had smooth surface circular orifices 0.38 mm in diameter with an L/D ratio of 6.8 and a spacing of 10 holes per cm. The die temperature was maintained at approximately 225°C ± 3°C, the primary air temperature

and pressure were 225°C and 35 KPa respectively and the air knives were positioned with a 0.76 mm gap and a 0.25 mm setback. The extruder was operated at 225°C and the polymer throughput rate was 134 g/hr/cm die length. The collector drum, which was positioned approximately 12.5-15.2 cm from the die tip, was an oil heated smooth steel drum for allowing temperature control of the collector surface. The collector drum, when not heated by the oil, generally was about 55°C (unheated) under normal operating conditions. Pigment (# 0035067, a custom gray pigment available from ReedSpectrum, Holden, MA in pellet form as a concentrate in a polyurethane carrier) was manually blended with PS440-200 resin pellets to achieve a final 6 weight percent pigment level before introducing the pellets into the extruder hopper. Similarly, solid flakes of the fluorochemical melt additive were ground to a powder and manually blended with the hot, dry PS440-200 resin pellets (also including the pigment concentrate pellets) at the indicated levels prior to the pellets being introduced into the extruder hopper.

LAMINATION PROCEDURE

A polyurethane film (Dureflex # PS8010, a 0.025 mm polyesterurethane type film, available from Deerfield Urethane, Chicago, IL) was laminated to the rough, air interface surface (i.e., the non-collector surface) of polyurethane BMF webs prepared as described above by means of a heated nip roll positioned approximately 38 cm downstream from the point where microfibers impinged on the collector drum. Lamination pressure was varied by adjusting the gap between the nip roller and the collector drum. The nip roll was also connected to an oil heater to afford elevated temperature control for the lamination process.

Webs A - C

A series of BMF webs were prepared using the general BMF preparation procedure described above except that the fluorochemical (FC) oxazolidinone melt additive similar to those described in U.S. Patent No. 5,025,052 (Crater et al.) Example 1, except that the alcohol and isocyanate reactants used to prepare the oxazolidinone were $C_8F_{17}SO_2N(CH_3)CH_2CH(CH_2Cl)OH$ and $OCNC_{18}H_{37}$, respectively. The fluorocarbon melt additive level was varied between 0.5 and 1.0 weight percent and the collector temperature was varied as noted in Table 1. The BMF webs had basis weights of 110 g/m^2 ± 5 g/m^2. Abrasion resistance data for these webs is reported in Table 3.

Table 1
BMF Web Preparation

Web	FC (Wt. %)	Collector Temp. (°C)
A	0.5	Unheated
B	1.0	77
C	1.0	99

Examples 1-6

BMF/polyurethane film laminates were prepared using the general BMF web preparation procedure and lamination procedures described above. BMF webs used in the laminates, which had basis weights of 110 g/m^2 ± 5 g/m^2, had fluorochemical oxazolidinone melt additive levels of 0.5 and 1.0 weight percent, as noted in Table 2. Additionally, the collector temperature was varied, as noted in Table 2. Lamination conditions utilized in the preparation of the BMF/polyurethane film laminates are also noted in Table 2. Abrasion resistance, friction value, and hand data for these webs are reported in

Table 3. The tensile strength data for an unlaminated sample of a polyesterurethane BMF web without the FC processing aid and the pigment used in the BMF web components of the laminates of the present invention, the polyurethane film used in the laminates of the invention, and the laminate of Example 4 are included in Table 3 for both the machine direction (MD) and cross direction (CD).

Table 2
BMF/Polyurethane Film Laminates

Example #	FC (wt. %)	Collector Temp. (°C)	Nip Roll Temp. (°C)	Nip Roll Press. (kg/cm)
1	0.5	Unheated	116	2.09
2	1.0	Unheated	110	1.86
3	1.0	Unheated	116	2.09
4	1.0	71	110	0.52
5	1.0	77 - 81	99	0.23
6	1.0	93	99	-

Table 3
Abrasion Resistance Properties

Web/Example #	Abrasion Resistance	Friction value	Hand	Tensile Strength
A	Poor, significant roping of the BMF web	-	-	-
B	Good, minor roping of BMF the web	-	-	-
C	Good, minor roping of BMF the web	-	-	-
1	Poor, significant roping of the BMF web	-	-	-
2	Poor, significant roping of the BMF web	-	-	-
3	Poor, significant roping of the BMF web	-	-	-
4	Best, minor roping of the BMF web	134 g	65.2 g	59.85 N-MD 36.67 N-CD
5	Poor, minor roping but extensive delamination of the BMF web from film	-	-	-
6	Poor, minor roping but extensive delamination of BMF web from film	-	-	-
PET Fabric[1]	-	175.2 g	35.5	-
Suede-Like Fabric[2]	-	233.5 g	185.5 g	-
Vinyl Fabric[3]	-	117.2 g	>1000 g	-
BMF Web[4]	-	-	-	24.48 N-MD 20.34 N-CD
PU Film[5]	-	-	-	14.02 N-MD 9.75 N-CD

1. A woven PET fabric similar to that used for "mouse pad" surfaces.
2. Suede-like fabric, similar to ULTRASUEDE, a fabric available from Springs Industries, Inc., Fort Mill, SC.
3. Vinyl coated fabric, available as NAUGAHYDE.
4. A 110 g/m^2 basis weight web produced essentially as described in Example A except that it did not contain the FC processing aid and the gray pigment.
5. Dureflex PS8010 film used in the preparation of the laminates of the invention.

The data in Tables 1-3 demonstrate that with the PS440-200 polyurethane/fluorochemical oxazolidinone formulation it is necessary to have an elevated collector temperature (greater than 70°C) to produce BMF webs having good abrasion resistance (i.e., to minimize roping). The data also demonstrate that if a collector temperature less than about 70°C is used during the production of the BMF web, roping cannot be significantly reduced by utilizing higher nip roll temperatures during the lamination procedure. Additionally, nip roll pressure is a very critical aspect of the lamination procedure, as laminates produced with nip roll pressures significantly less than about 0.52 kg/cm are subject to extensive delamination. Generally speaking, the combination of low friction value and favorable hand provided by the polyurethane BMF/film laminates of the present invention make them more preferred than conventional fabrics as covering materials for wrist rest articles.

The oil and water repellency properties of the laminate of Example 4 were demonstrated using SCOTCHGARD Textile Finishes - SP3010 Oil Test Kit and SCOTCHGARD Textile Finishes - SP3011 Aqueous Test Kit respectively (available from 3M, St. Paul, MN) and their associated test procedures. Generally speaking, the oil challenges (1-8) decrease in viscosity with increasing number while the surface tension of the aqueous challenges (1-10) decrease with increasing number as the isopropyl alcohol (IPA) content of the challenge increases from a 90/10 ratio for challenge 1, to a 100 percent IPA content, in 10 percent increments, for challenge 10. Five drops of each of the oil and aqueous challenge fluids were placed on the test specimen and the degree which each drop was absorbed by the BMF web after a period of 60 seconds was noted. None of the test drops of the oil repellency

challenges 1-5 were absorbed by the laminate, corresponding to a oil repellency rating of 5 and none of the drops of aqueous challenges 1-10 were absorbed by the laminate, corresponding to an aqueous repellency rating of 10.

Web D and Examples 7-9

A polyurethane BMF web was prepared essentially according to the BMF web preparation process described above except that an elastomeric polyurethane PS 79-200 from Morton International, Inc., was substituted for the PS440-200 resin and the extrusion temperature, the die temperature, the primary air temperature, the primary air pressure, and the collector temperature were adjusted in response to the lower melt temperature of the polyesterurethane resin. The BMF web had basis weights of 110 g/m^2 ± 5 g/m^2 and contained 1 weight percent of the fluorochemical processing additive. Laminates of the BMF Web D to a Dureflex # PS8010 polyurethane film were prepared essentially according to the process described for Examples 1 - 6 except that the collector temperature was varied while the fluorochemical processing aid concentration and the lamination conditions were held constant. Specific process details for the examples are reported in Table 4 and the abrasion resistance for the samples is reported in Table 5.

Table 4
PS79-200 BMF/Film Laminates

Web/Example #	Collector Temp. (°C)	Nip Roll Temp. (°C)	Nip Roll Pressure (kg/cm)
D	Unheated	-	-
7	54	110	1.86
8	63	110	1.86
9	71	110	1.86

Table 5
Abrasion Resistance Properties

Web/Example #	Abrasion Resistance
D	Poor, significant roping of the BMF web
7	Poor, significant roping of the BMF web and significant delamination
8	Good, some roping but no delamination
9	Best, minor roping and no delamination

The data in Tables 4 and 5 demonstrate that with the PS79-200/fluorochemical oxazolidinone formulation a collector temperature of about 60°C was needed to achieve good lamination of the BMF web to the polyurethane film. More preferably, the collector temperature should be at least about 70°C to achieve improved abrasion resistance of the BMF web film laminate. Oil and aqueous repellencies for the laminate of Example 8, which were determined as described for Example 4, were 5 and 10 respectively.

We Claim:

1. A soft conformable barrier fabric laminate comprising a calendered elastic laminate of a fluid impermeable polyurethane film layer and an elastic polyurethane nonwoven fibrous web where the fibers have an average diameter of less than 50 μm and the outer face of the polyurethane nonwoven web has a friction value of less than about 200 g and the fabric hand of the laminate is less than about 200 g.

2. The barrier fabric of claim 1 wherein the friction value of the polyurethane nonwoven web is less than about 150 g.

3. The barrier fabric of claim 1 wherein the fabric hand of the laminate is less than about 100 g.

4. The barrier fabric of claim 1 wherein the fluid impermeable film layer is heat sealable.

5. The barrier fabric of claim 1 wherein the fluid impermeable film layer and the polyurethane nonwoven fibrous web are directly heat sealed to each other.

6. The barrier fabric of claim 1 wherein the calendered laminate is calendered over at least 70% of the laminate surface area.

7. The barrier fabric of claim 5 wherein the barrier film layer is an elastic polyurethane film.

8. The barrier fabric of claim 1 wherein the polyurethane nonwoven web is a melt blown web having an average polyurethane fiber diameter of less than 25 μm.

9. The barrier fabric of claim 8 wherein the average polyurethane fiber diameter is less than 10 μm.

10. The barrier fabric of claim 1 wherein the elastic laminate, when stretched by 25 percent or more, will recover at least 40 percent and the laminate has an elongation at break of at least 100 percent.

11. The barrier fabric of claim 10 wherein the elastic laminate, when stretched by 25 percent or more, will recover at least 60 percent.

12. The barrier fabric of claim 10 wherein the elastic laminate, when stretched by 25 percent or more, will recover at least 85 percent and the laminate has an elongation at break of at least 150 percent.

13. The barrier fabric of claim 8 wherein the polyurethane melt blown nonwoven has a basis weight of from 70 to 150 g/m^2 and the film thickness is from 0.018 to 0.50 mm.

14. The barrier fabric of claim 8 wherein the polyurethane melt blown nonwoven has a fluorochemical treatment to increase oil and water repellency.

15. The barrier fabric of claim 14 wherein the fluorochemical compound is a fluorochemical oxazolidinone.

16. The barrier fabric of claim 15 wherein the fluorochemical is applied to the surface of the polyurethane nonwoven web.

17. The barrier fabric of claim 15 wherein the fluorochemical oxazolidinone is incorporated into the polyurethane fibers as a melt additive.

18. The barrier fabric of claim 14 wherein the fluorochemical is incorporated into the polyurethane fibers as a melt additive.

19. The barrier fabric of claim 1 wherein when the laminate, when Taber abrasion tested, as defined herein, does not delaminate.

20. A gel filled article comprising a viscoelastic gel covered on at least one outer face by a soft conformable barrier fabric laminate comprising a calendered elastic laminate of a fluid impermeable film layer and an elastic polyurethane nonwoven fibrous web where the fibers have an average diameter of less than 50 μm and the outer face of the polyurethane nonwoven web has a friction value of less than about 200 g and the fabric hand of the laminate is less than about 200g.

21. The gel filled article of claim 20 wherein the friction value of the polyurethane nonwoven web is less than about 150 g.

22. The gel filled article of claim 20 wherein the fabric hand of the laminate is less than about 100g.

23. The gel filled article of claim 20 wherein the fluid impermeable film layer is heat sealable.

24. The gel filled article of claim 20 wherein the fluid impermeable film layer and the polyurethane nonwoven fibrous web are directly heat sealed to each other.

25. The gel filled article of claim 20 wherein the calendered laminate is calendered over at least 70% of the laminate surface area.

26. The gel filled article of claim 25 wherein the barrier film layer is a polyurethane film.

27. The gel filled article of claim 20 wherein the polyurethane nonwoven web is a melt blown web having an average polyurethane fiber diameter of less than 25 μm.

28. The gel filled article of claim 27 wherein the average polyurethane fiber diameter is less than 10 μm.

29. The gel filled article of claim 20 wherein the elastic laminate, when stretched by 25 percent or more, will recover at least 40 percent and the laminate has an elongation at break of at least 100 percent.

30. The gel filled article of claim 29 wherein the elastic laminate, when stretched by 25 percent or more, will recover at least 60 percent.

31. The gel filled article of claim 29 wherein the elastic laminate, when stretched by 25 percent or more, will recover at least 85 percent and the laminate has an elongation at break of at least 150 percent.

32. The gel filled article of claim 27 wherein the polyurethane melt blown nonwoven has a basis weight of from 70 to 150 g/m^2 and the film thickness is from 0.018 to 0.5 mm.

33. The gel filled article of claim 27 wherein the polyurethane melt blown nonwoven has a fluorochemical treatment to increase oil and water repellency.

34. The gel filled article of claim 33 wherein the fluorochemical compound is a fluorochemical oxazolidinone.

35. The gel filled article of claim 34 wherein the fluorochemical is applied to the surface of the polyurethane nonwoven web.

36. The gel filled article of claim 34 wherein the fluorochemical oxazolidinone is incorporated into the polyurethane fibers as a melt additive.

37. The gel filled article of claim 33 wherein the fluorochemical is incorporated into the polyurethane fibers as a melt additive.

38. The gel filled article of claim 20 wherein when the laminate, when Taber abrasion tested, as defined herein, does not delaminate.

39. The gel filled article of claim 20 comprising a oil: elastomeric block copolymer mixture in a ratio of 4:1 to 15:1.

40. The gel filled article of claim 21 further comprising a rigid support element defining at least one face of the article.

41. The gel filled article of claim 20 wherein the gel filled article comprises a wrist rest support for a computer keypad or mouse.

42. A method for forming a soft conformable elastic barrier fabric comprising laminating a fluid impermeable film layer and an elastic polyurethane nonwoven fibrous web, where the fibers have an average diameter of less than 50 μm, at a nip temperature of greater than 60°C and a nip pressure of greater than 0.36 kg/cm.

43. The method of claim 42 wherein one roll forming the nip is a collector roll the method further comprising the step of forming the nonwoven web as melt blown web on the collector roll and heating the collector roll to at least 60°C.

44. The method of claim 43 wherein the collector roll has a smooth outer surface.

45. The method of claim 44 wherein the nip pressure is 0.46 kg/cm to 2.04 kg/cm.

46. The method of claim 44 wherein the collector roll is at least 65°C.

47. The method of claim 43 further comprising adding a fluorochemical melt additive in an amount of 0.25 to 3.0 weight percent of the polyurethane melt prior to melt blowing the polyurethane fibers.

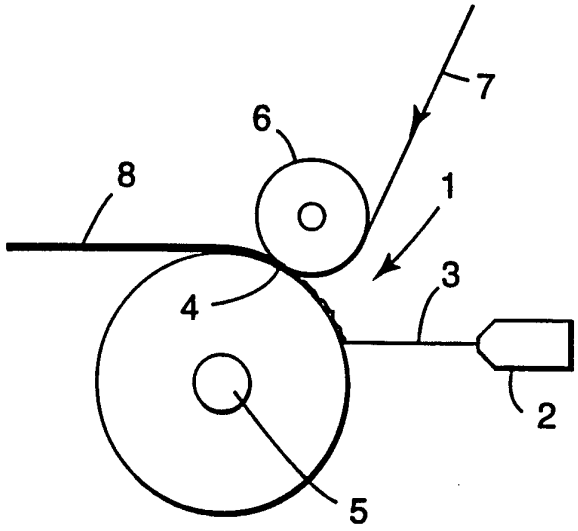

Fig.1

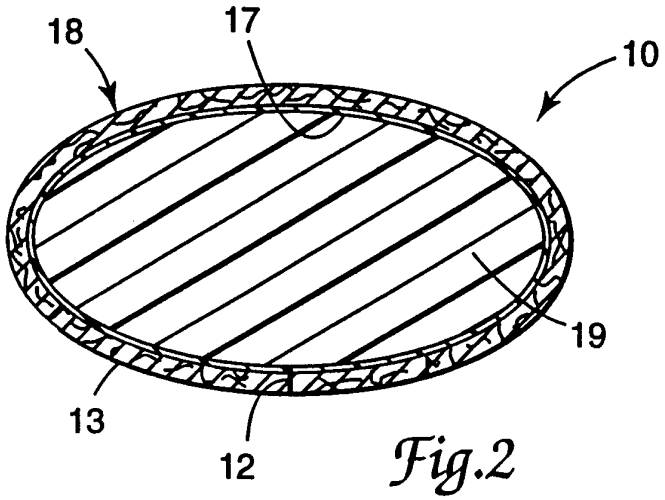

Fig.2

INTERNATIONAL SEARCH REPORT

Internati Application No
PCT/US 96/06478

A. CLASSIFICATION OF SUBJECT MATTER
IPC 6 B32B27/10 A47B21/03

According to International Patent Classification (IPC) or to both national classification and IPC

B. FIELDS SEARCHED

Minimum documentation searched (classification system followed by classification symbols)
IPC 6 B32B A47B

Documentation searched other than minimum documentation to the extent that such documents are included in the fields searched

Electronic data base consulted during the international search (name of data base and, where practical, search terms used)

C. DOCUMENTS CONSIDERED TO BE RELEVANT

Category *	Citation of document, with indication, where appropriate, of the relevant passages	Relevant to claim No.
P,X	WO,A,96 09165 (EXXON CHEMICAL PATENTS INC) 28 March 1996 see page 4, line 15 - page 9, line 27 see page 13, line 27 - page 14, line 19; figure 2 ---	1-3,6,8, 9,14,42
X	US,A,5 036 551 (DAILEY MARLENE M ET AL) 6 August 1991 see claims 1,7,8,10,13 see column 5, line 6 - line 14 see column 6, line 28 - line 46 see column 8, line 59 - line 68 see column 9, line 54 - line 59 see column 10, line 52 - line 65 see column 11, line 8 - line 67; example 1	1-3,6-9, 13
A	---	42
	-/--	

[X] Further documents are listed in the continuation of box C.

[X] Patent family members are listed in annex.

* Special categories of cited documents :

"A" document defining the general state of the art which is not considered to be of particular relevance

"E" earlier document but published on or after the international filing date

"L" document which may throw doubts on priority claim(s) or which is cited to establish the publication date of another citation or other special reason (as specified)

"O" document referring to an oral disclosure, use, exhibition or other means

"P" document published prior to the international filing date but later than the priority date claimed

"T" later document published after the international filing date or priority date and not in conflict with the application but cited to understand the principle or theory underlying the invention

"X" document of particular relevance; the claimed invention cannot be considered novel or cannot be considered to involve an inventive step when the document is taken alone

"Y" document of particular relevance; the claimed invention cannot be considered to involve an inventive step when the document is combined with one or more other such documents, such combination being obvious to a person skilled in the art.

"&" document member of the same patent family

Date of the actual completion of the international search	Date of mailing of the international search report
7 November 1996	15. 11. 96

Name and mailing address of the ISA	Authorized officer
European Patent Office, P.B. 5818 Patentlaan 2 NL - 2280 HV Rijswijk Tel. (+ 31-70) 340-2040, Tx. 31 651 epo nl, Fax (+ 31-70) 340-3016	Ibarrola Torres, O

Form PCT/ISA/210 (second sheet) (July 1992)

INTERNATIONAL SEARCH REPORT

Internatic Application No
PCT/US 96/06478

C.(Continuation) DOCUMENTS CONSIDERED TO BE RELEVANT

Category °	Citation of document, with indication, where appropriate, of the relevant passages	Relevant to claim No.
X	US,A,4 379 192 (WAHLQUIST JOSEPH D ET AL) 5 April 1983 see claims 1,8,11,19 see column 7, line 20 - line 51	1-3,5,8, 9,13
A	---	42
X	US,A,4 660 228 (OGAWA YASUHIRO ET AL) 28 April 1987 cited in the application see claims 1,4,6,10,14 see column 1, line 61 - column 3, line 35 see column 4, line 32 - line 33 see column 6, line 10 - line 18 see column 8, line 8 - line 15	1-3,5, 7-13
X	---	1-3,8-12
	EP,A,0 341 875 (MINNESOTA MINING & MFG) 15 November 1989 cited in the application see claims 1-6,10 see page 4, line 3 - page 5, line 22	
A	---	1
	DATABASE WPI Section Ch, Week 9522 Derwent Publications Ltd., London, GB; Class A96, AN 95-166417 XP002017916 & JP,A,07 088 130 (ASAHI KASEI KOGYO KK) , 4 April 1995 see abstract	
A	---	1,20
	US,A,4 910 978 (GORDON TIM H ET AL) 27 March 1990 see the whole document	

1

INTERNATIONAL SEARCH REPORT

Information on patent family members

Internati Application No
PCT/US 96/06478

Patent document cited in search report	Publication date	Patent family member(s)	Publication date
WO-A-9609165	28-03-96	NONE	
US-A-5036551	06-08-91	AU-B- 639080	15-07-93
		CA-A- 2075971	17-08-91
		DE-D- 69100509	18-11-93
		DE-T- 69100509	11-05-94
		EP-A- 0515522	02-12-92
		ES-T- 2048010	01-03-94
		JP-T- 5503896	24-06-93
		WO-A- 9112132	22-08-91
US-A-4379192	05-04-83	AU-B- 558399	29-01-87
		AU-A- 1507683	05-01-84
		BE-A- 897109	17-10-83
		CA-A- 1198976	07-01-86
		DE-A- 3321893	29-12-83
		FR-A- 2529235	30-12-83
		GB-A,B 2122134	11-01-84
		LU-A- 84869	17-11-83
		NL-A- 8302153	16-01-84
US-A-4660228	28-04-87	JP-C- 1766357	11-06-93
		JP-B- 4002681	20-01-92
		JP-A- 61289102	19-12-86
EP-A-0341875	15-11-89	AU-B- 609963	09-05-91
		AU-A- 3261989	16-11-89
		CA-A- 1334559	28-02-95
		DE-D- 68910875	05-01-94
		DE-T- 68910875	01-06-94
		JP-A- 2014059	18-01-90
		US-A- 5230701	27-07-93
US-A-4910978	27-03-90	AU-A- 3816885	28-11-85
		DE-A- 3586550	01-10-92
		EP-A- 0162583	27-11-85