Aug. 21, 1934. H. W. BISHOP 1,970,881

LANTERN

Filed Nov. 9, 1932 3 Sheets-Sheet 1

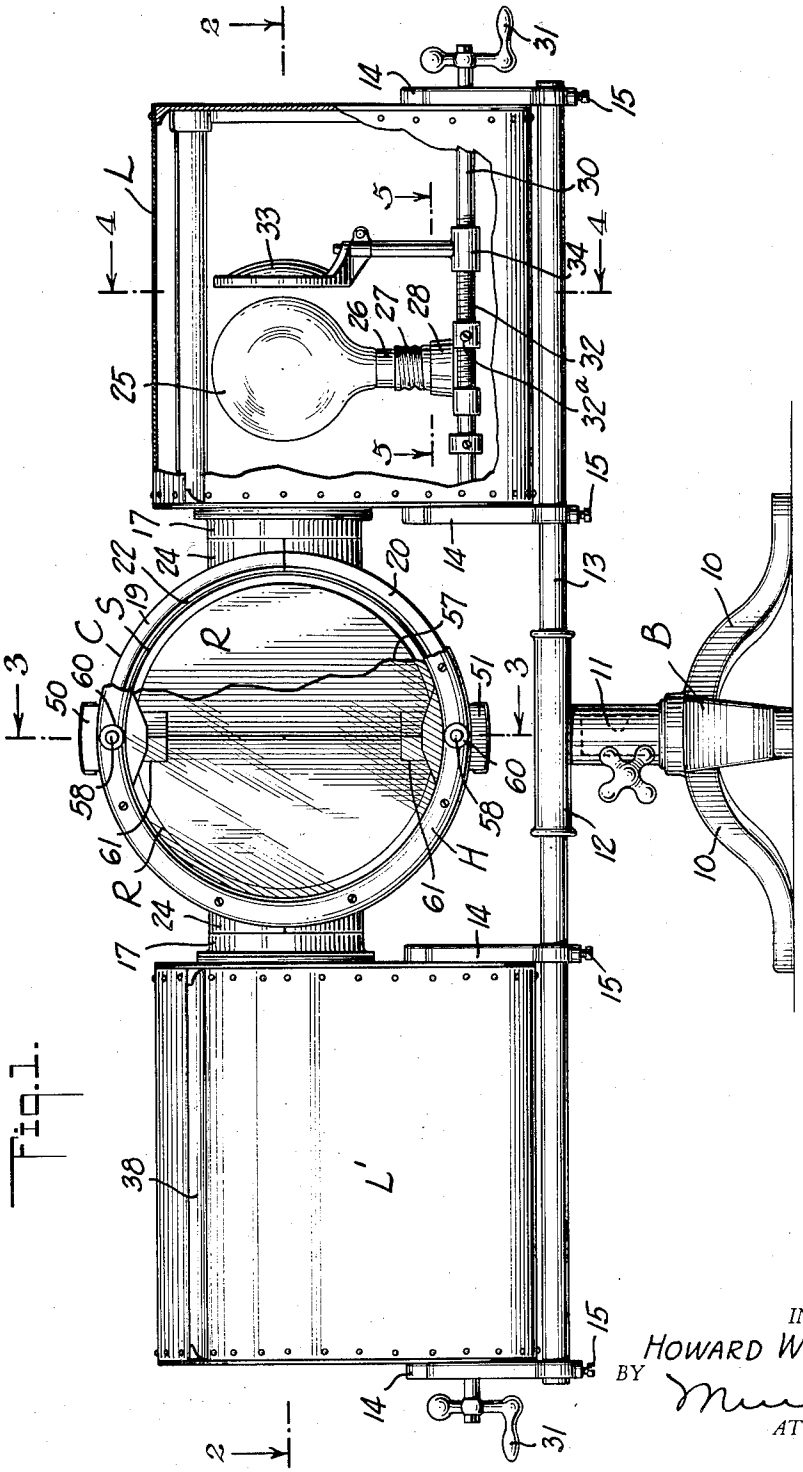

Fig. 1.

INVENTOR.
HOWARD W. BISHOP
BY Munn & Co
ATTORNEYS.

Aug. 21, 1934. H. W. BISHOP 1,970,881

LANTERN

Filed Nov. 9, 1932 3 Sheets-Sheet 2

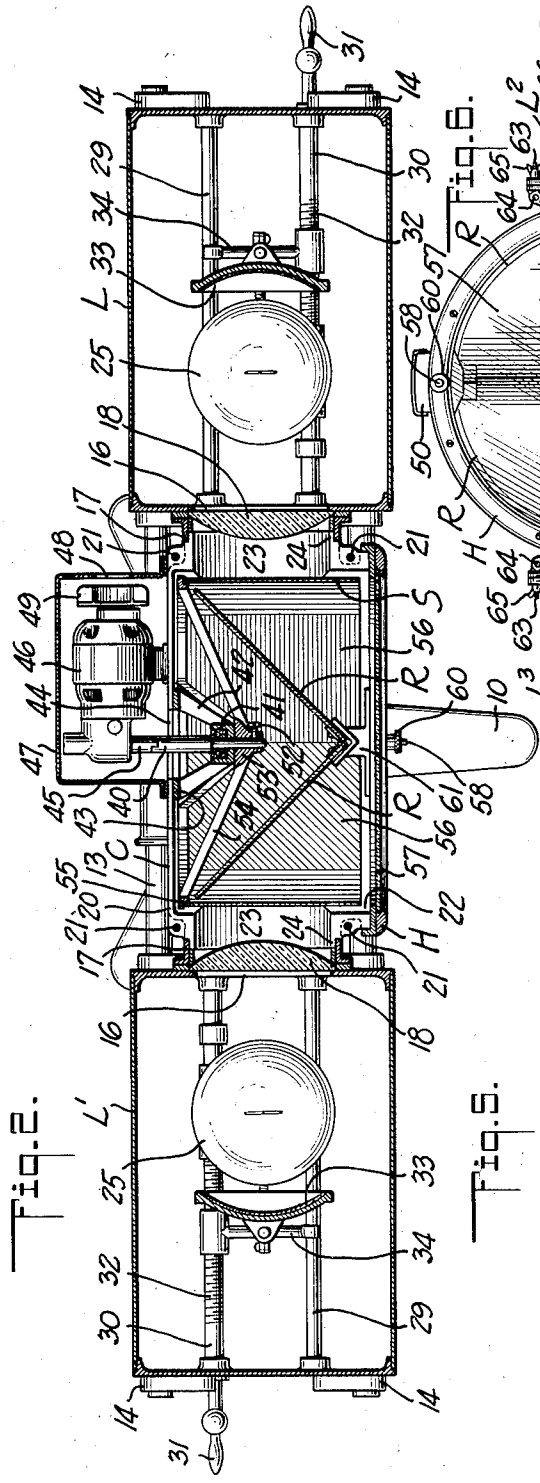

Fig. 2.

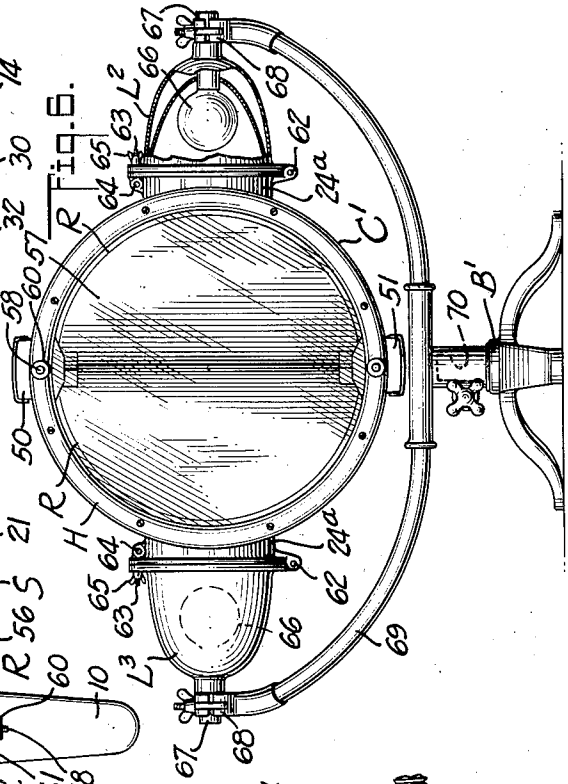

Fig. 6.

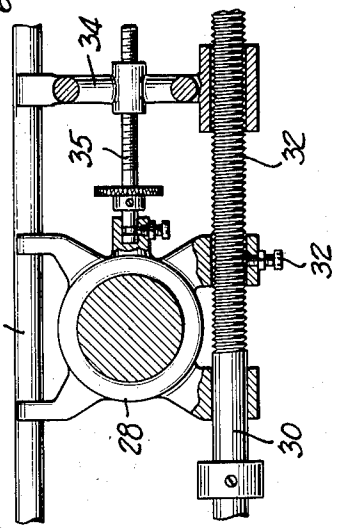

Fig. 5.

INVENTOR.
HOWARD W. BISHOP
BY
ATTORNEYS.

Aug. 21, 1934. H. W. BISHOP 1,970,881

LANTERN

Filed Nov. 9, 1932 3 Sheets-Sheet 3

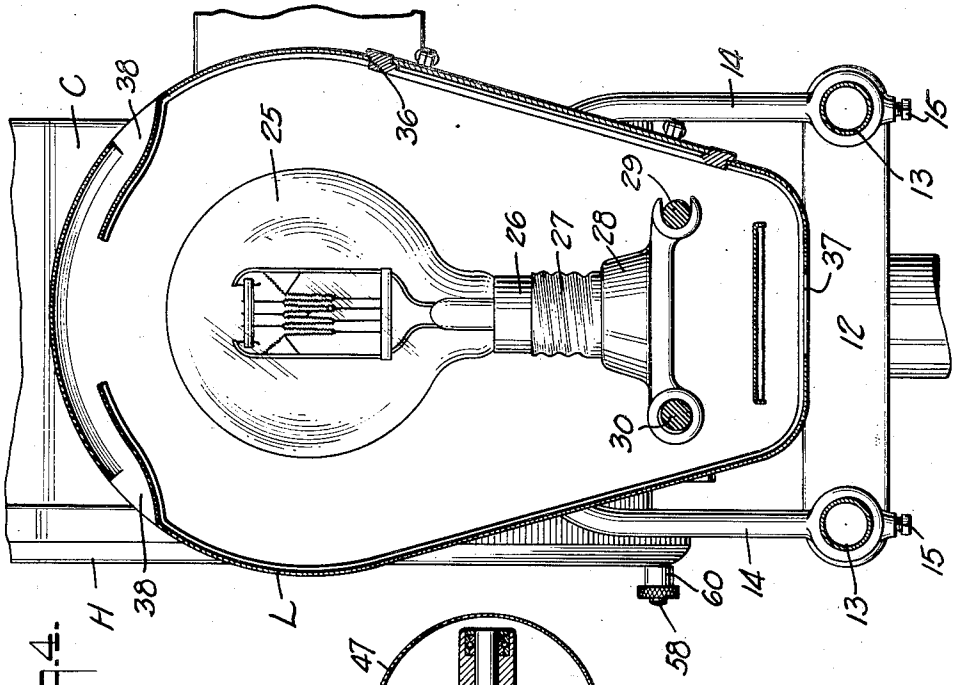

Fig. 4.

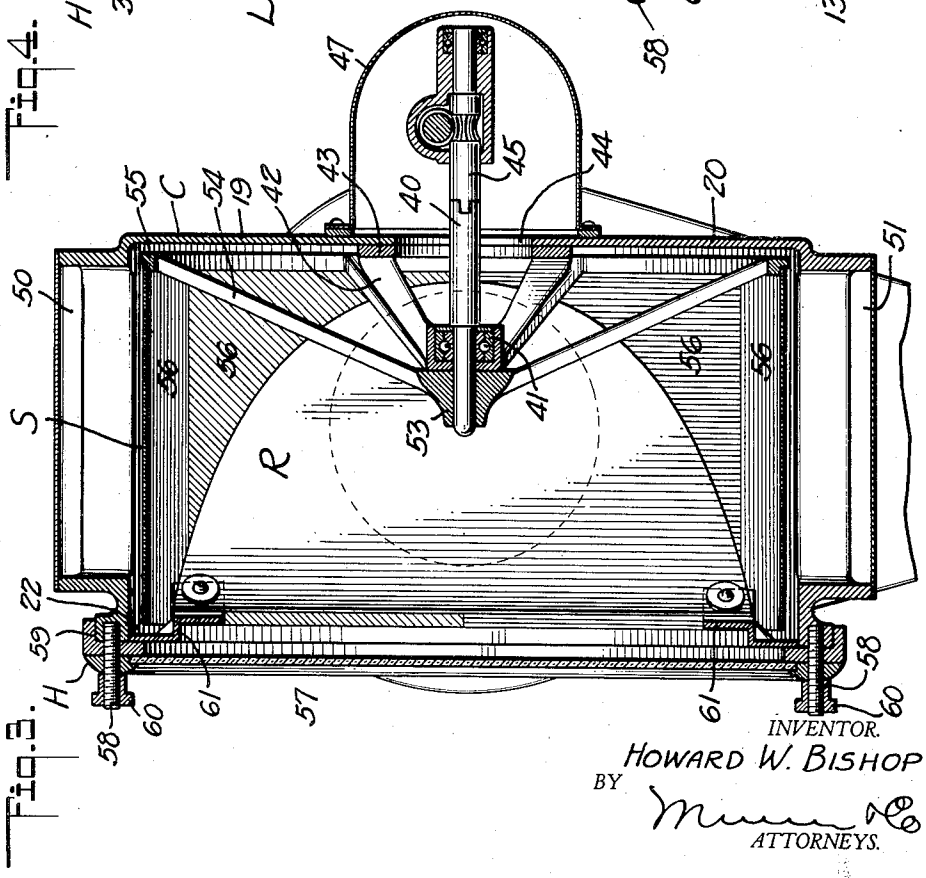

Fig. 3.

INVENTOR.
HOWARD W. BISHOP
BY
ATTORNEYS.

Patented Aug. 21, 1934 1,970,881

UNITED STATES PATENT OFFICE

1,970,881

LANTERN

Howard W. Bishop, Los Angeles, Calif.

Application November 9, 1932, Serial No. 641,917

15 Claims. (Cl. 240—3.1)

This invention relates generally to lanterns of the character embodied in United States Letters Patent No. 1,831,090, issued November 10, 1931, and wherein a vari-colored screen is movable relative to a source of light in a manner to obtain changes in the color of the projected light, all with the object of producing novel and attractive lighting effects.

It is a purpose of the present invention to provide a lantern of the above described character in which the direction of the projected light can be varied without disturbing the light source, as is decidedly advantageous with the use of certain highly efficient lamps requiring that they occupy a predetermined position in order to prevent premature failure in operation and insure maximum efficiency for a long period of time.

It is another purpose of the invention to provide a lantern embodying a novel construction, mounting and arrangement of reflectors and screen in an enclosing casing, all to the end of rendering the screen readily accessible for changing, as desired.

It is a further purpose of the invention to provide a lantern which, in one of its adaptations, produces a highly efficient spotlight, the light source of which is conveniently adjustable to vary the size and intensity of the projected light beam.

Another purpose of the invention is the provision of a lantern which is adjustable, together with its lamps, as a unit to vary the direction of the projected light, while rendering the lamps readily accessible for inspection and replacement.

Two forms of the invention will be described, following which the novel features will be pointed out in claims.

In the accompanying drawings

Figure 1 is a view in front elevation partly broken away, of one form of lantern embodying this invention;

Figure 2 is a horizontal sectional view taken on the line 2—2 of Figure 1, and looking in the direction of the arrows;

Figures 3, 4 and 5 are enlarged detail sectional views taken respectively on the lines 3—3, 4—4 and 5—5 of Figure 1, and looking in the directions of the respective arrows;

Figure 6 is a view in front elevation partly broken away, of a modified form of lantern embodying this invention.

Similar reference characters designate similar parts in each of the several views.

Referring specifically to the drawings, and particularly to Figures 1 to 5, inclusive, this form of the invention comprises a base B defined by legs 10 supporting a vertical pin 11 on which is rotatably mounted a head 12 in which is secured tubes 13—13 projecting horizontally in parallelism from opposite sides of the head. The tubes support lamp housings L and L', through the medium of brackets 14 secured to the opposite end walls of the housing and provided with sleeves through which the tubes project, the sleeves having set screws 15 which coact with the tubes in rigidly securing the housing to the tubes in end to end spaced relation at opposite sides of the head as shown in Figure 1.

The housings L and L' are identical in construction, and each housing is provided with an opening 16 (Figure 2) in confronting and alined relation to the opening of the other housing, these openings being formed in the confronting end walls of the housings and being bounded by collars 17 in which are supported condensing lenses 18 illustrated as plano-convex in form.

A cylindrical casing C is constructed of two mating sections 19 and 20 secured together by bolts 21 (Figure 2), the casing having a front opening 22 and lateral openings 23—23 which are diametrically opposed in alinement and are bounded by collars 24 telescopically received, respectively, in the collars 17 of the respective housings L and L' so as to pivotally mount the casing between and from the housings for adjustment about an axis passing centrally through the openings 16 and 23 of the housings and casing respectively.

In each of the housings L and L' is a lamp 25 the base 26 of which is mounted in a vertical socket 27 provided on a carriage 28 slidably mounted on horizontally disposed parallel rods 29 and 30, the rod 29 being fixed and the rod 30 being rotatably mounted in the end walls of the housing. Each of the rods 30 projects exteriorly of the outer end of the respective housing L or L' and is provided with a crank handle 31 by which the rod can be rotated. Each of the rods 30 constitutes a feed shaft and is provided with external threads 32 with which a conically pointed set screw 32a on the respective carriage has engagement so that upon rotation of the rod in one direction or the other the carriage will be accordingly fed towards or away from the respective condensing lens 18.

In each of the housings L and L' is a concavo-convex reflector 33 behind the lamp 25, this reflector being supported by a carriage 34 slidably mounted on the rods 29 and 30 and operatively connected to the lamp carriage 28 by an adjust-

ing screw 35 enabling the reflector 33 to be moved towards and away from the lamp, to the end that with the aforestated adjustment of the lamp relative to the condensing lens, the size and intensity of the light beam projected by the lamp into the casing can be varied.

Each of the housings L and L' is provided with a door controlled opening 36 through which access can be had to the lamp in the housing, and is further provided with an air inlet 37 and air outlets 38—38 enabling air to circulate through the housing and conduct heat generated by the lamp from the housing.

The light projected by the lamps into the casing C from opposite sides thereof is adapted to be colored and projected from the casing through the front opening 22 thereof by the following means.

A shaft 40 is journaled in a bearing 41 supported axially in the casing by arms 42 projecting from a ring 43 secured to the rear wall of the casing. This shaft projects through a relatively large opening 44 in the rear wall of the casing, and is coupled to a shaft 45 driven by an electric motor 46 also secured to the rear wall exteriorly of the casing, the motor being enclosed by a case 47 having an air inlet 48 through which air is drawn during operation of the motor by a fan 49 secured to the motor shaft. The air thus drawn into the case 47 is forced into the casing C through its opening 44, and discharges from the casing through vents 50 and 51 therein, to the end of conducting heat from the casing.

Detachably secured to the outer end of the shaft 40 by a set screw 52 is the hub 53 of a spoked wheel 54, the rim 55 of which is of slightly less diameter than the internal diameter of the casing. A screen S in the form of an open ended tube of glass or other suitable material is composed of a number of differently colored segmental panels 56, with those panels which are diametrically opposed being preferably of the same color. One end of this screen is secured to the rim 55 of the wheel 54 so as to rotatably mount the screen in the casing in the path of light projected into the casing from opposite sides thereof by the lamps 25, to the end that differently colored panels of the screen will be successively presented to the light beams as the screen rotates. The screen can be readily inserted and removed from the casing through the front opening 22 thereof so that other screens with differently colored panels and arrangements thereof can be substituted.

A holder H in the form of a two part flanged ring supports a transparent panel 57 and is provided at diametrically opposed points with openings receiving threaded studs 58 projecting from the lip 59 of the casing at the front thereof. Knurled nuts 60 are adapted to be threaded on the studs 58 to detachably secure the holder to the casing, with the panel 57 closing the front opening 22 of the latter. Brackets 61 are fixed to the holder H at diametrically opposed points at the inner side of the holder, and secured to these brackets in substantially right angular relation so as to be disposed at equal and opposite angles to the light beams projected into opposite sides of the casing and through the screen, are reflectors R—R having plane reflecting surfaces. The reflectors R—R are thus supported by the holder within the screen S and are disposed directly in the path of the light beams from the lamps so as to reflect the light beams outwardly of the screen and forwardly of the casing through the front opening 22 thereof. The angles of the reflectors to the light beams from the respective lamps are such that the individual beams will merge into each other at a point in advance of the casing so as to form a single beam. It will be clear that as the screen rotates, the light projected from the casing will vary in color as the differently colored panels of the screen pass across the beams from the lamps.

The direction in which the light is projected from the lantern is readily varied in a vertical plane, by adjusting the casing C about the axis of its mounting on the lamp housings L and L'. As this adjustment does not disturb the lamps 25 in the respective housings, highly efficient lamps of a type requiring a certain position in which they are to be burned in order to prevent premature failure can be employed in this lantern. The direction in which the light is projected from the lantern is varied in a horizontal plane by swinging the lantern as a unit upon the base. As the lamps 25 are intended to be burned in the vertical position shown, with their bases 26 downmost, the aforestated adjustments do not change the vertical arrangement of the lamps, so that maximum efficiency and long life of the lamps are obtainable.

Reference will now be had to Figure 6, wherein is shown another form of lantern embodying this invention. This lantern differs in construction from that previously described, particularly in the association of the two lamp housings L^2 and L^3, with the central casing C' and with the base B'. The oppositely disposed collars 24*a* and 24*a* on the casing C' correspond to the collars 24—24 of the casing C, and have hingedly connected thereto at 62 the respective lamp housings L^2 and L^3. Bolts 63 pivoted at 64 on the collars 24*a* are provided with wing nuts 65 for co-action with the hinged connections 62 in securing the lamp housings rigidly to the casing in position for light beams from lamps 66 in the housings to be projected in opposite directions into the casing. The housings L^2 and L^3 are provided with axially disposed trunnions 67 at their outer ends, journaled in alined bearings 68 on a U-shaped frame 69 pivoted on a vertical pin 70 rising from the base B' to enable the casings and housings to be swung about a vertical axis for the purpose of varying the direction in a horizontal plane in which the light beam is projected from the lantern.

The bearings 68 are split in any suitable manner enabling the casing and housing to be removed as a unit from the frame 69, following which the wing nuts 65 can be released to permit the housings to be swung about the hinged connections 62 to open positions so that the lamps 66 can be readily inspected and replaced when necessary. With the trunnions 67 mounted in the bearings 68 as shown in Figure 6, it will be manifest that the casings and housings can be readily adjusted as a unit about the common axis of the trunnions so as to vary the direction of the projected light beam in a vertical plane.

It is to be understood that the construction of the casing C' is otherwise the same as that of the casing C and that the casing C' contains the screen S and reflectors R—R, constructed, arranged and operating as previously described in connection with the first form of this invention.

I claim:

1. In a lantern; a pair of spaced apart lamp housings, each having an opening confronting the other; lamps in the housings for projecting light through said openings; a casing having oppositely disposed openings; means for pivotally mounting the casing between the housings for adjustment about an axis passing through the openings of the housings and casing so that light from the lamps can be projected into the casing irrespective of adjustment of the latter; and means in the casing for reflecting light forwardly from the casing.

2. In a lantern; a pair of spaced apart lamp housings, each having an opening confronting the other; lamps in the housings for projecting light through said openings; a casing having oppositely disposed openings; the housings and casing having telescopically associated portions bounding the openings thereof for pivotally mounting the casing from the housings for adjustment about an axis passing through the openings so that light from the lamps can be projected into the casing irrespective of adjustment of the latter; and means in the casing for reflecting light forwardly from the casing.

3. In a lantern; a pair of spaced apart lamp housings, each having an opening confronting the other; lamps in the housings for projecting light through said openings; a casing having oppositely disposed openings; means for pivotally mounting the casing between the housings for adjustment about an axis passing through the openings of the housings and casing so that light from the lamps can be projected into the casing irrespective of adjustment of the latter; means in the casing for reflecting light forwardly from the casing; a vari-colored screen; and means for movably mounting the screen in the casing to present different parts of the screen to light from the lamps as the screen is moved.

4. In a lantern, a pair of spaced apart lamp housings, each having an opening confronting the opening of the other; lamps in the housings for projecting light through said openings; a casing having oppositely disposed openings; means for pivotally mounting the casing between and from the housings for adjustment about an axis passing centrally through the openings of the housings and casing so that light from the lamps can be projected into the casing irrespective of adjustment of the latter; and means in the casing for reflecting light forwardly from the casing.

5. In a lantern, a pair of spaced apart lamp housings, each having an opening confronting the opening of the other lamps in the housings for projecting light through said openings; a casing having oppositely disposed openings; means for pivotally mounting the casing between and from the housings for adjustment about an axis passing centrally through the openings of the housings and casing so that light from the lamps can be projected into the casing irrespective of adjustment of the latter; and a pair of angularly related reflectors supported in the casing in positions to reflect light forwardly from the casing.

6. In a lantern, a pair of spaced apart lamp housings, each having an opening confronting the opening of the other; lamps in the housings for projecting light through said openings; a casing having oppositely disposed openings; means for pivotally mounting the casing between and from the housings for adjustment about an axis passing centrally through the openings of the housings and casing so that light from the lamps can be projected into the casing irrespective of adjustment of the latter; a pair of angularly related reflectors supported in the casing in positions to reflect light forwardly from the casing; a vari-colored and tubular screen receiving the reflectors and being rotatably mounted in the casing in the path of light from the lamps; and means for rotating the screen to present different parts thereof to the light.

7. In a lantern, a pair of lamp housings, each having a collar defining an opening in the respective housing; a casing having diametrically opposed collars defining openings therein and being telescopically associated with the respective collars of the housings to pivotally mount the casing between and from the housings for adjustment; lamps in the housings for projecting light through said openings into the casing; means in the casing for reflecting light from the lamps forwardly of the casing; and a movably mounted vari-colored screen in the casing, presenting different parts thereof to light from the lamps as the screen is moved.

8. In a lantern, a pair of lamp housings, each having a collar defining an opening in the respective housing; a casing having diametrically opposed collars defining openings therein and being telescopically associated with the respective collars of the housings to pivotally mount the casing between and from the housings for adjustment; lamps in the housings for projecting light through said openings into the casing; a pair of angularly related reflectors supported in the casing in positions to reflect light from the lamps forwardly from the casing; and a vari-colored and tubular screen receiving the reflectors and being rotatably mounted to present different parts thereof to light from the lamps as the screen is rotated.

9. In a lantern, a casing having a front opening; a vari-colored and tubular screen rotatably mounted in the casing; a lamp for projecting light through the screen from a location exteriorly and laterally of the screen; means for rotating the screen to present different parts thereof to the light as the screen is rotated; a transparent panel for said opening; a holder for supporting said panel in spanning relation to the opening; a reflector; and means for supporting the reflector from the holder with the reflector disposed in the screen in a position to reflect light from the lamp outwardly of the screen through said panel.

10. In a lantern, a casing having a front opening; a vari-colored and tubular screen rotatably mounted in the casing; a lamp for projecting light through the screen from a location exteriorly and laterally of the screen; means for rotating the screen to present different parts thereof to the light as the screen is rotated; a transparent panel; a holder for said panel; a reflector supported by the holder; and means for securing the holder to the casing with the panel spanning said opening and the reflector disposed within the screen to reflect light from the lamp outwardly of the screen through said panel.

11. In a lantern; a casing having a front opening; a vari-colored and tubular screen rotatably mounted in the casing; a lamp for projecting light through the screen from a location exteriorly and laterally of the screen; means for rotating the screen to present different parts thereof to the light as the screen is rotated; a transparent panel; a holder for said panel; a

reflector supported by the holder and insertable into the screen as the holder is applied to the casing; and means for detachably securing the holder to the casing with the panel spanning said opening and the reflector disposed to reflect light from the lamp outwardly of the screen through said panel.

12. In a lantern, a casing having a front opening and oppositely disposed lateral openings; lamps exteriorly of the casing for projecting light through said lateral openings into the casing; means for pivotally mounting the casing upon a transverse axis passing through said openings so that light from the lamps can be projected into the casing irrespective of adjustment of the latter; means in the casing for reflecting light from the casing through the front opening thereof; and a vari-colored and tubular screen rotatably mounted in the casing in a position to present different parts of the screen to light from the lamps as the screen is rotated.

13. In a lantern, a casing having a front opening and oppositely disposed lateral openings; lamp housings secured to the casing in surrounding relation to the lateral openings of the latter; lamps in the housings for projecting light therefrom through the lateral openings of the casing into the latter; means in the casing for reflecting light from the lamps through the front opening of the casing; a vari-colored screen movably mounted in the casing to present different parts to light from the lamps as the screen is moved; alined trunnions on the lamp housings; and a support in which said trunnions are journaled to pivotally mount the casing and housings for adjustment as a unit.

14. In a lantern, a casing having a front opening and oppositely disposed lateral openings; a pair of lamp housings having trunnions; lamps in the housings; means for pivotally mounting the housings on the casing to occupy an open position for access to the lamps, and a closed position over said openings and wherein the trunnions are disposed in alinement; means for securing the housings in closed position; a support in which said trunnions are journaled to pivotally mount the casing and housing for adjustment as a unit; means in the casing for reflecting light therefrom through the front opening thereof; and a vari-colored screen movably mounted in the casing to present different parts to light from the lamps as the screen is moved.

15. In a lantern, two light sources each projecting a beam of light towards the other; a vari-colored and tubular screen rotatably mounted between the light sources in the path of said light beams therefrom to present different parts of the screen to the light beams as the screen is rotated; means for reflecting the light beams in a general direction forwardly from the screen following passage of the beams through the screen; and means for mounting the screen and reflecting means for adjustment about an axis passing through the light sources.

HOWARD W. BISHOP.