US00RE47040E

(19) **United States**
(12) **Reissued Patent**
Hynes

(10) **Patent Number: US RE47,040 E**
(45) **Date of Reissued Patent: Sep. 18, 2018**

(54) **BLACK WINE RACK FACE**

(71) Applicant: **VINOTEMP INTERNATIONAL CORPORATION**, Rancho Dominguez, CA (US)

(72) Inventor: **India Hynes**, Newport Beach, CA (US)

(73) Assignee: **Vinotemp International Corporation**, Irvine, CA (US)

(21) Appl. No.: **29/528,194**

(22) Filed: **Aug. 25, 2015**

Related U.S. Patent Documents

Reissue of:
(64) Patent No.: **Des. 711,936**
Issued: **Aug. 26, 2014**
Appl. No.: **29/445,271**
Filed: **Feb. 8, 2013**

(51) **LOC (11) Cl.** **15-07**
(52) **U.S. Cl.**
USPC **D15/89**
(58) **Field of Classification Search**
USPC D15/79, 81, 83–89; D25/119; D3/304, D3/313, 315; D6/336, 406.1, 406.3, 510;
(Continued)

(56) **References Cited**

U.S. PATENT DOCUMENTS

D238,536 S 1/1976 Scherzer
D284,630 S * 7/1986 Ferdinand D6/511
(Continued)

OTHER PUBLICATIONS

US District Court, Southern District of New York, Complaint, *Wine Enthusiast, Inc.*, vs. *Vinotemp International Corporation*, dated Sep. 6, 2017, in 19 pages.

Primary Examiner — Darlington Ly

(74) *Attorney, Agent, or Firm* — Knobbe, Martens, Olson & Bear, LLP

(57) **CLAIM**

The ornamental design for a black wine rack face, as shown and described.

DESCRIPTION

[FIG. **1** is a top perspective view of a black wine rack face within a wine cabinet showing my new design;]
[FIG. **2** is is a top perspective view of a black wine rack face standing alone showing my new design]
[FIG. **3** is a front view thereof; FIG. **3** is a top view of the black wine rack face of FIG. **1**;]
[FIG. **4** is a rear view of the black wine rack face of FIG. **1**;]
[FIG. **5** is a left side view thereof, the right side being a mirror image thereof;]
[FIG. **6** is a top plan view thereof; and,]
[FIG. **7** is a bottom plan view thereof.]
[Elements shown in dashed, dotted or broken lines form no part of the design.]
FIG. 8 is a top perspective view of a black wine rack face within a wine cabinet showing my new design;
FIG. 9 is a top perspective view of a black wine rack face standing alone showing my new design;
FIG. 10 is a front view thereof;
FIG. 11 is a rear view thereof;
FIG. 12 is a left side view thereof, the right side being a mirror image thereof;
FIG. 13 is a top plan view thereof; and,
FIG. 14 is a bottom plan view thereof.
The broken lines illustrate environmental structure of a wine rack and portions of a wine race face thereto that do not form part of the claimed design. The diagonal cross-hatched lines are provided to represent the solid color black.

1 Claim, 6 Drawing Sheets

Matter enclosed in heavy brackets [ ] appears in the original patent but forms no part of this reissue; matter printed in italics indicates the additions made by reissue.

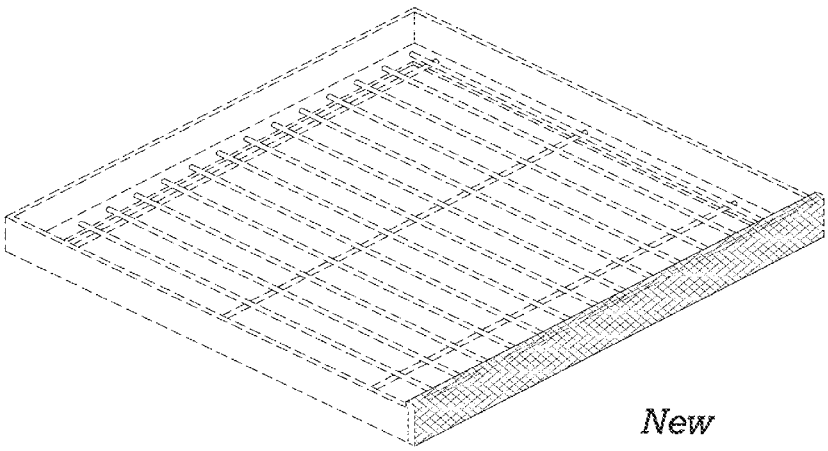

(58) **Field of Classification Search**
USPC D7/510, 511, 549, 550.1, 552.1, D7/553.1–553.4, 555, 600.1–600.4, D7/701–708
CPC A47B 55/02; A47B 73/002; A47B 73/008; F25D 25/02; F25D 25/024; F25D 31/007
See application file for complete search history.

(56) **References Cited**

U.S. PATENT DOCUMENTS

D382,735	S	*	8/1997	Zapf	D6/492
D415,482	S	*	10/1999	Jolson	D14/447
D475,374	S	*	6/2003	Segers	D15/89
D478,601	S	*	8/2003	Becke	D15/81
D511,013	S	*	10/2005	Bullock, Jr.	D25/119
D512,081	S	*	11/2005	Chang	D15/81
D519,133	S	*	4/2006	Chang	D15/81
D524,830	S	*	7/2006	Lei et al.	D15/81
D529,630	S	*	10/2006	Zarb	D25/119
7,165,371	B2	*	1/2007	Yoyasu	52/716.5
D550,256	S	*	9/2007	Lei et al.	D15/81
D551,262	S	*	9/2007	Becke	D15/89
D566,490	S		4/2008	Frentzel	
D576,023	S	*	9/2008	Urmson, Jr.	D8/382
D595,357	S	*	6/2009	Simpson	D19/88
D607,242	S	*	1/2010	Clausen	D6/707.24
D618,932	S	*	7/2010	Linder	D6/675.1
D625,941	S	*	10/2010	Holzer	D6/510
D627,374	S	*	11/2010	Yang	D15/81
D630,230	S	*	1/2011	Yang	D15/81
D630,231	S	*	1/2011	Yang et al.	D15/81
D638,237	S	*	5/2011	Holzer	D6/510
D639,827	S	*	6/2011	Chen	D15/81
D660,327	S	*	5/2012	Doberstein et al.	D15/89
D660,461	S	*	5/2012	Kotin et al.	D25/119
D660,984	S	*	5/2012	Kotin et al.	D25/119
D664,149	S	*	7/2012	Crisp	D14/459
D672,174	S	*	12/2012	Artus	D6/705
D684,400	S	*	6/2013	Gasser	D6/705.5
D694,290	S		11/2013	Hottmann et al.	
D698,372	S	*	1/2014	Brenneis	D15/81
D700,221	S	*	2/2014	Ringemann et al.	D15/89
D717,080	S	*	11/2014	Dworman	D6/657
D719,987	S	*	12/2014	Lee	D15/89
D723,593	S	*	3/2015	Ryu	D15/89
D726,455	S	*	4/2015	Collini	D6/661
9,028,020	B2	*	5/2015	Gossens	A47B 73/00 312/408
D736,751	S	*	8/2015	Lee	D14/248
9,211,009	B2	*	12/2015	Greenwood	A47B 88/18
D747,836	S	*	1/2016	Cho	D32/6
2003/0117051	A1	*	6/2003	Kweon	A47B 96/025 312/408
2005/0258118	A1	*	11/2005	Lee et al.	211/134
2007/0096607	A1	*	5/2007	Ricchetti	A47B 63/00 312/184
2007/0228909	A1	*	10/2007	Hwang et al.	312/408
2008/0061665	A1	*	3/2008	Lautenschlager	A47B 88/0014 312/333

* cited by examiner

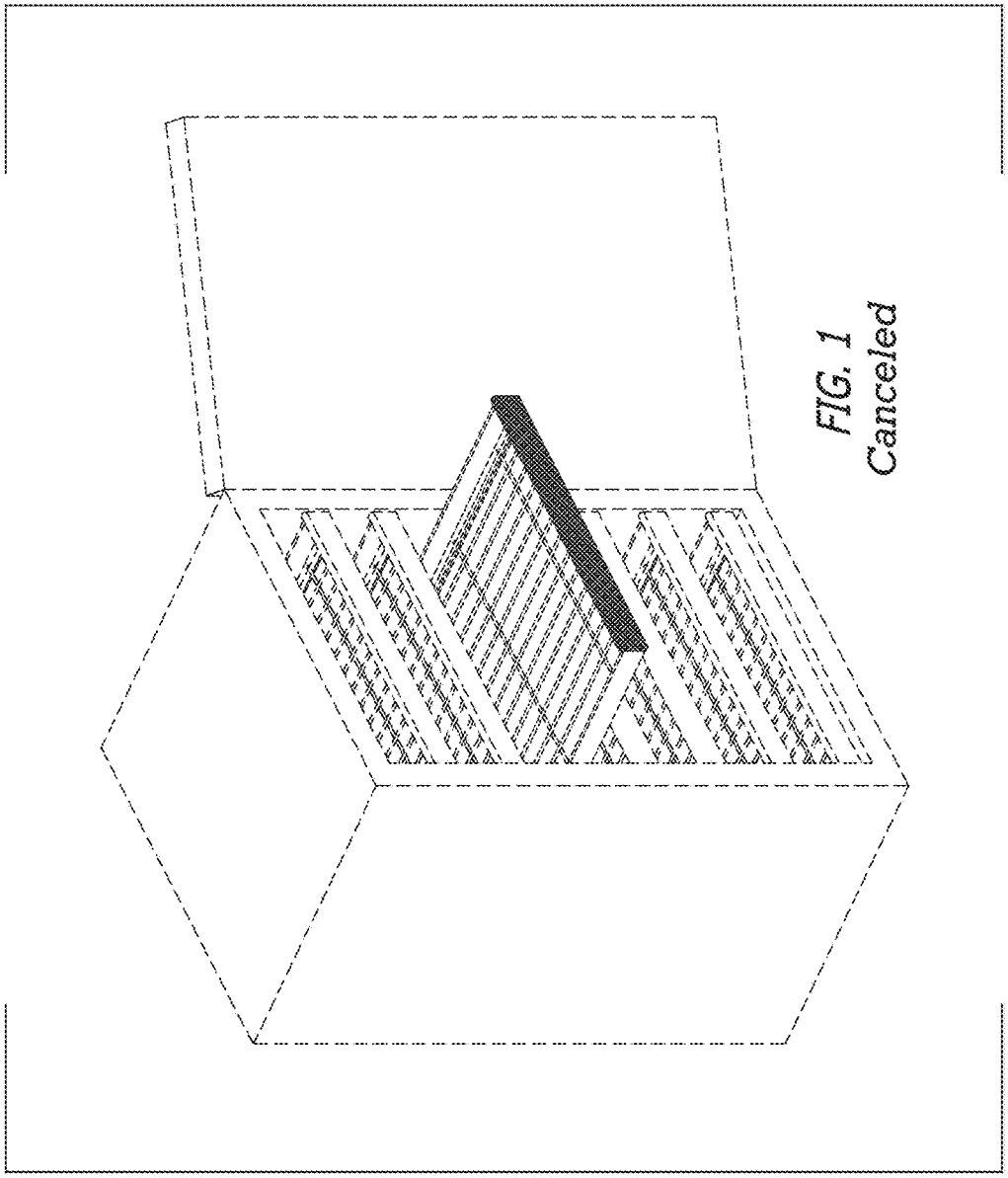

FIG. 1
Canceled

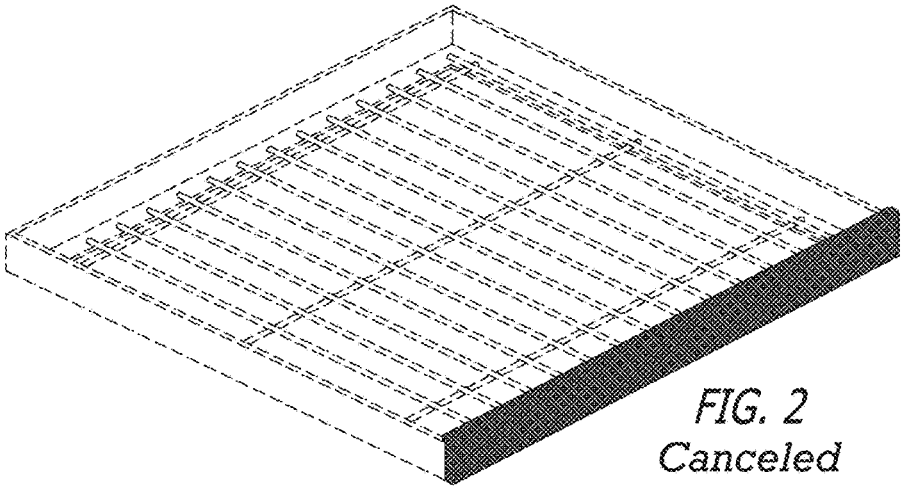

FIG. 2
Canceled

FIG. 3
Canceled

FIG. 4
Canceled

FIG. 5
Canceled

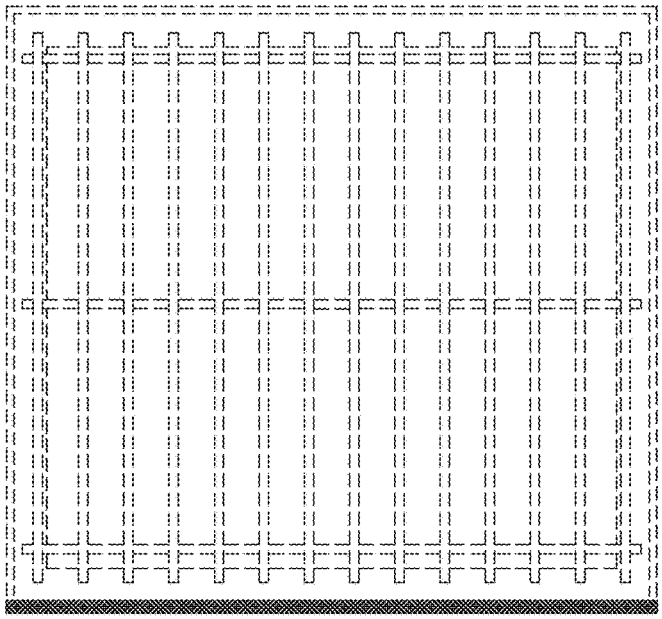

FIG. 6
Canceled

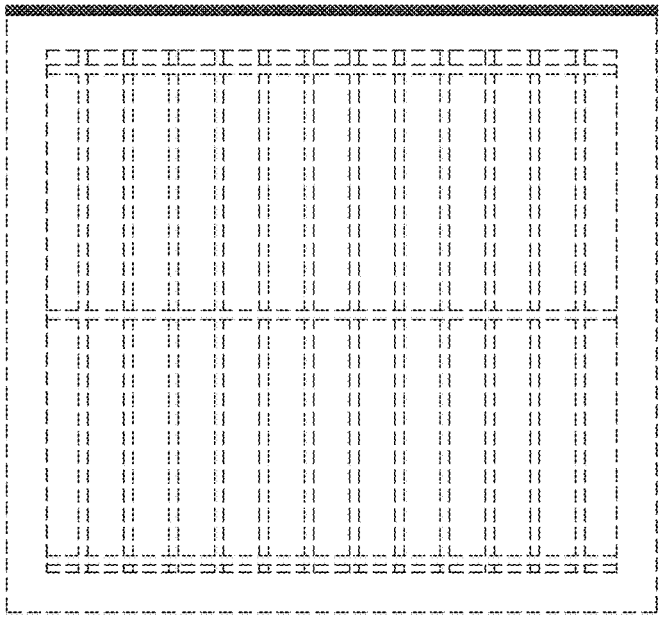

FIG. 7
Canceled

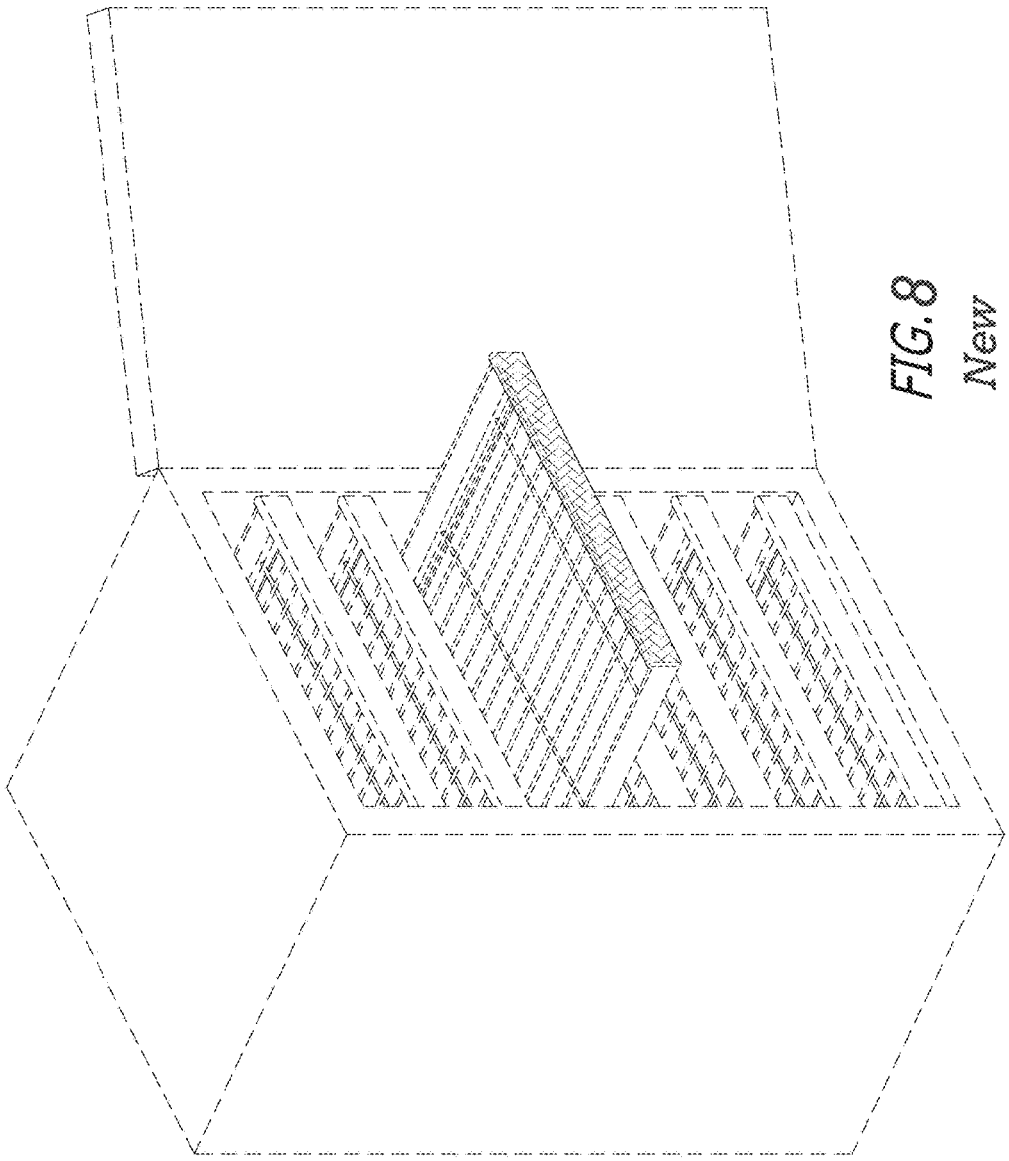

FIG. 8
New

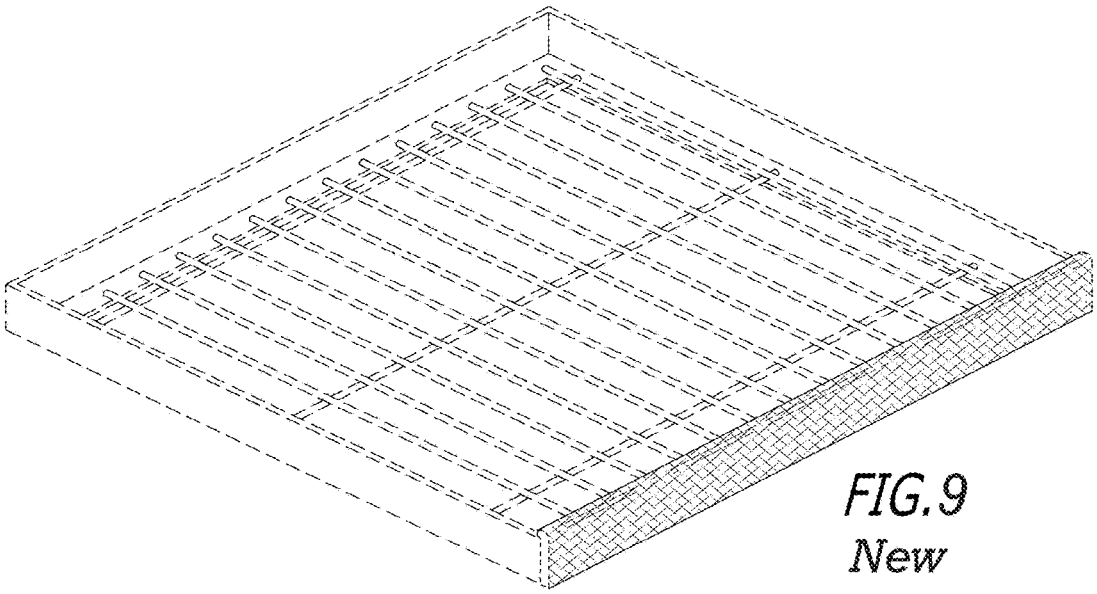

FIG.9
New

FIG.10
New

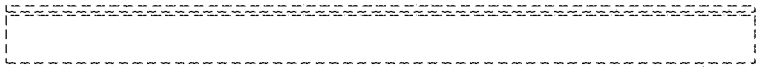

FIG.11
New

FIG.12
New

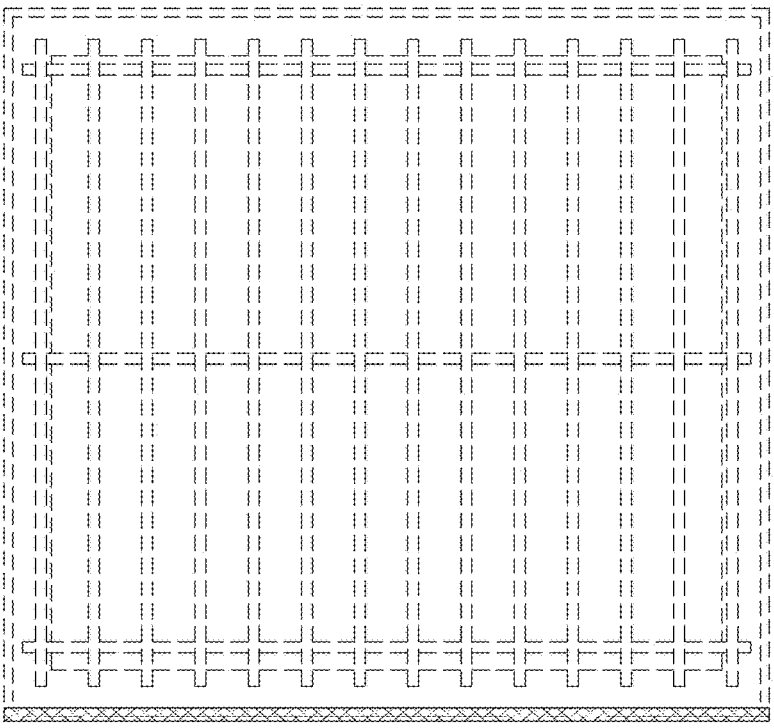

FIG. 13
New

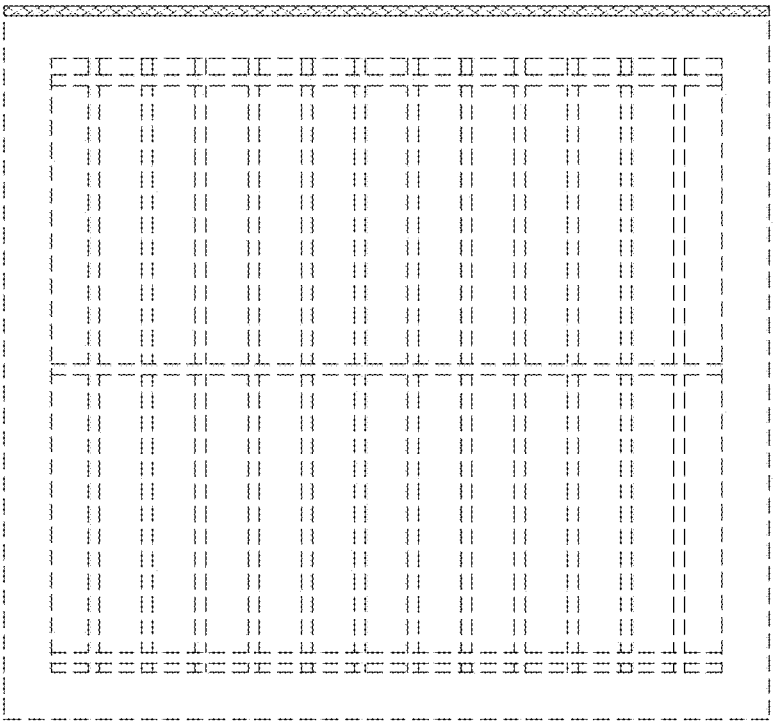

FIG.14
New