United States Patent [19]

Wienhold

[11] **3,924,722**

[45] **Dec. 9, 1975**

[54] **TYPEWRITER WITH ELECTRONIC KEYBOARD**

[75] Inventor: **James L. Wienhold,** Minneapolis, Minn.

[73] Assignee: **CPT Corporation,** Minneapolis, Minn.

[22] Filed: **Feb. 27, 1973**

[21] Appl. No.: **336,240**

[52] **U.S. Cl.** ..... **197/19;** 178/17.5; 340/365 R

[51] **Int. Cl.**[2] **B41J 5/30**

[58] **Field of Search** ..... 197/16–17, 197/19, 20, 52, 63, 66, 70, 107, 1 B, 113, 98; 340/172.5, 365 C; 178/17.5, 79, 81, 23 R, 34; 235/130 R, 132 E, 145 R, 145 A

[56] **References Cited**

UNITED STATES PATENTS

3,233,715	2/1966	Flieg	197/19
3,292,764	12/1966	Midgette et al.	197/20 X
3,414,103	12/1968	Knudsen et al.	197/20
3,453,387	7/1969	Bagley	178/17.5
3,470,539	9/1969	Proud, Jr. et al.	197/20 X
3,490,572	1/1970	Smith	197/66 X
3,493,928	2/1970	Juliusburger	172/23 R X
3,496,547	2/1970	Gorrill et al.	197/20 X
3,501,747	3/1970	Bungard et al.	197/20 X
3,530,976	9/1970	Higgason, Jr. et al.	197/20 X
3,554,350	1/1971	Rolph	197/70 X
3,604,906	9/1971	Hunter et al.	178/17.5 X
3,624,612	11/1971	Hecker et al.	197/19 X
3,629,507	12/1971	Worrall	178/79
3,630,336	12/1971	Johnson et al.	197/19
3,643,773	2/1972	Holmes, Jr.	197/19 X
3,662,382	5/1972	Janis	197/107 X
3,665,115	5/1972	Snook	178/17.5
3,703,949	11/1972	Howard et al.	197/19 X
3,739,344	6/1973	Serracchioli et al.	197/19 X
3,757,920	9/1973	Wolf et al.	197/19
3,760,376	9/1973	Tanner	197/19 X

OTHER PUBLICATIONS

IBM Technical Disclosure Bulletin, Vol. 8, No. 11 Apr., 1966 "Typewriter with Electronic Separation of input".

Primary Examiner—E. H. Eickholt
Attorney, Agent, or Firm—Schroeder, Siegfried, Ryan & Vidas

[57] **ABSTRACT**

The disclosure is directed to a modified IBM Selectric Typewriter which is driven through an electronic circuit and keyboard. The typewriter has electronic means for receiving signals and also for producing signals which are to be used in associated mechanisms such as being recorded on magnetic tape.

A diode matrix is used with switches to replace the rods and interposers and key levers. Through the use of a series of gates and electronic buffers, the signals are transposed from mechanical to electrical pulses and are eventually applied to a series of solenoid drivers which energize or actuate the solenoid drivers which energize or actuate the solenoids which are coupled to the tilt and rotate mechanism of the single element printer. Operational functions are also accomplished in a similar manner to complete functional operations of the typewriter.

In addition, the typewriter also includes means for actuation of the carriage assembly to return it to its initial or starting position without indexing the platen. The typewriter also includes an electrical means of stopping the carriage movement upon reaching the margin and accounting for the predetermined number of spaces by the carriage beyond the margin.

A timing mechanism is provided which times the print cycles so that additional input data may be put through the buffer stages for energizing the print mechanism upon completion of a print cycle in less time than the maximum alloted for the function.

Through the use of the three buffers, an operator may type a "burst pattern" and the buffers will properly store and print out the data in its proper sequence.

18 Claims, 29 Drawing Figures

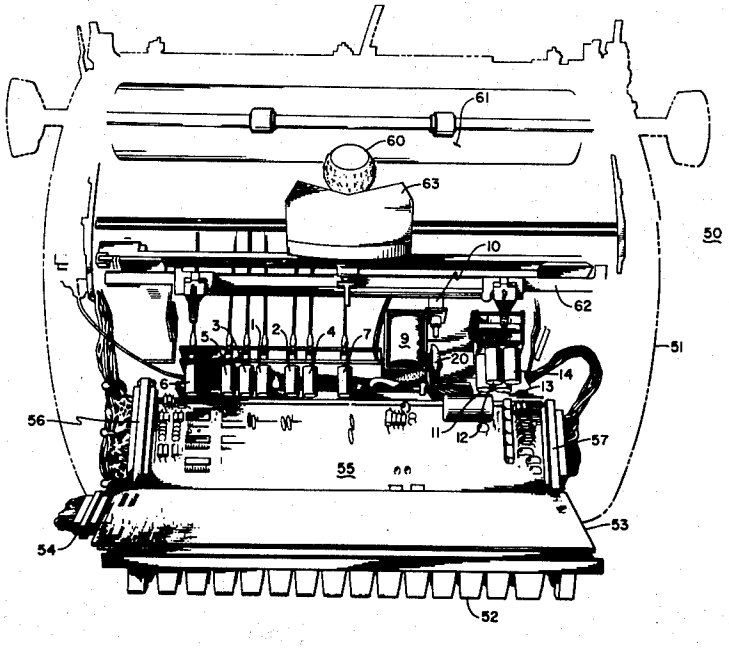

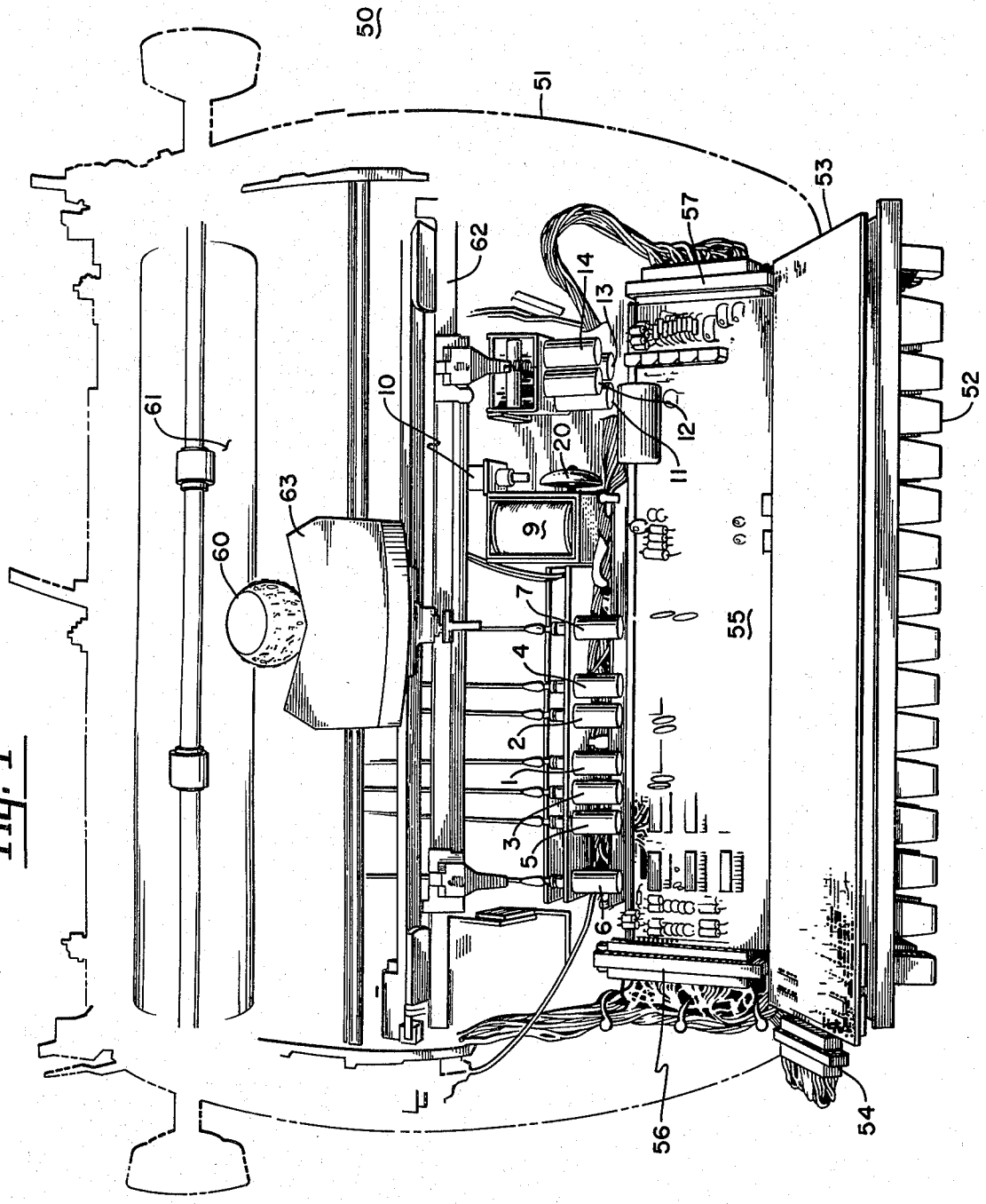

Fig. 1

Fig. 2

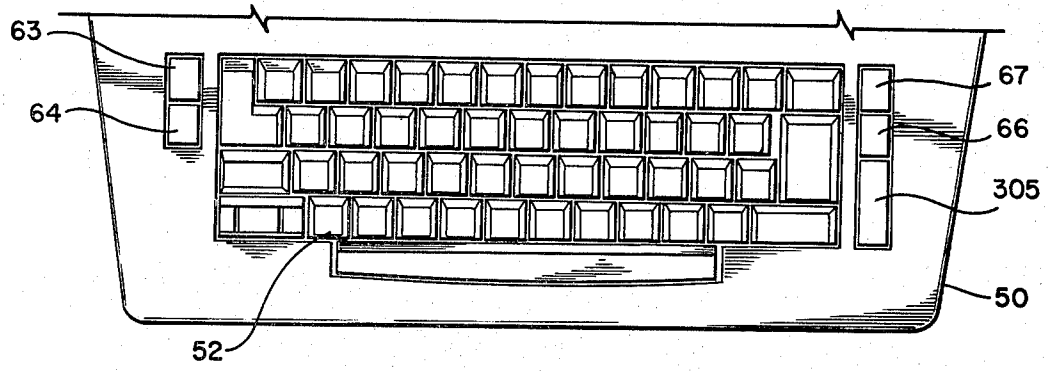

Fig. 3

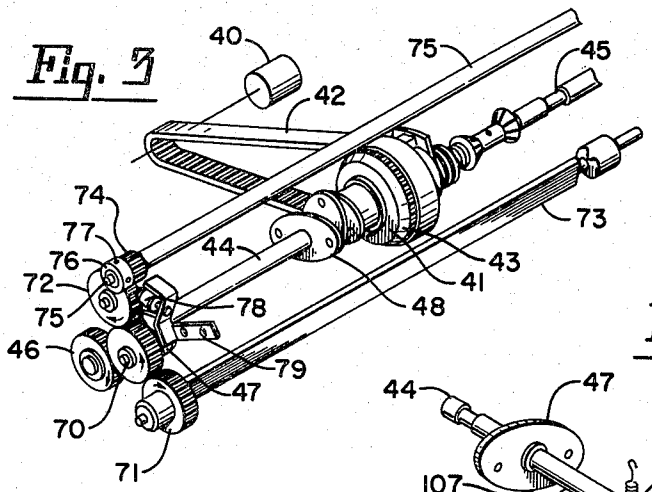

Fig. 4

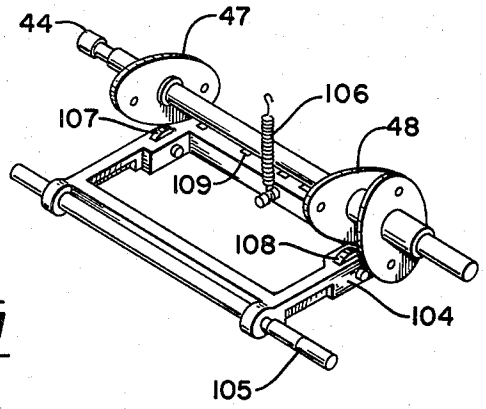

Fig. 5

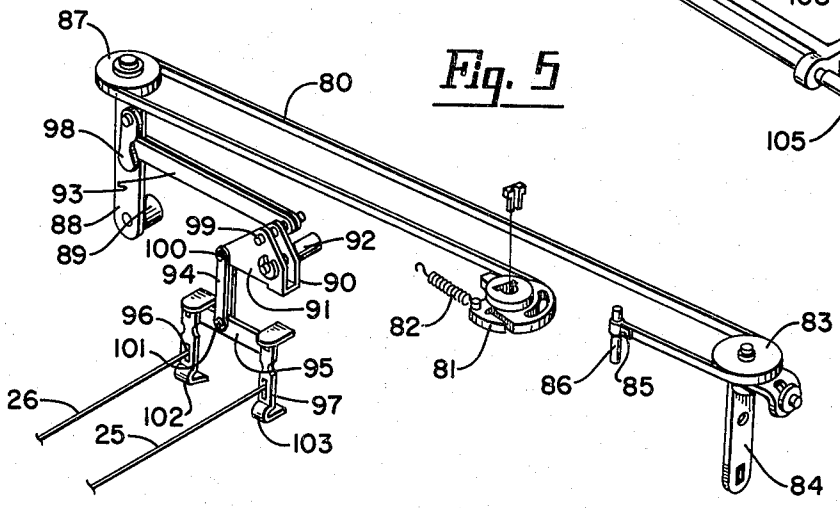

Fig. 6

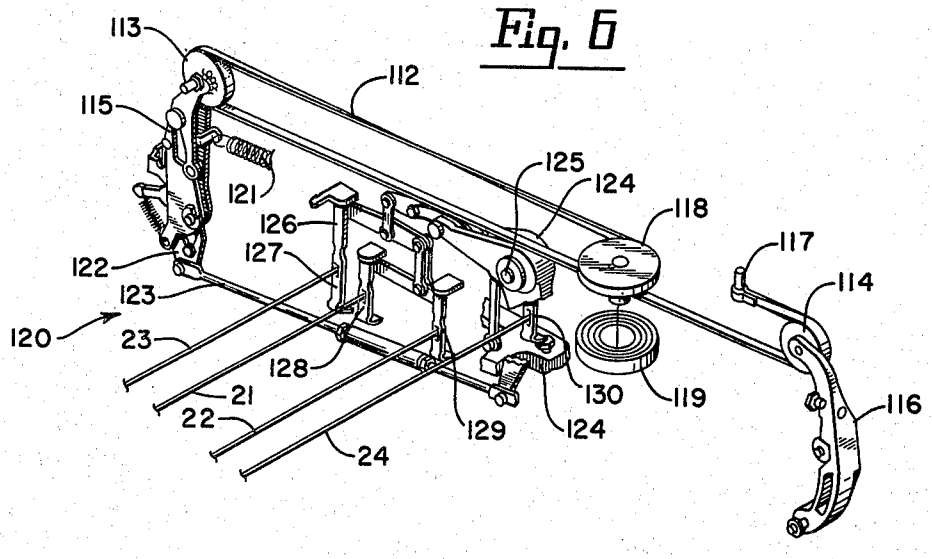

Fig. 7

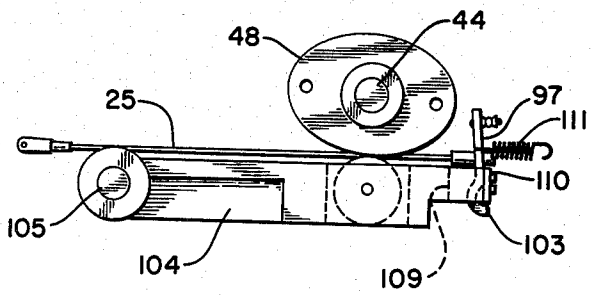

Fig. 8

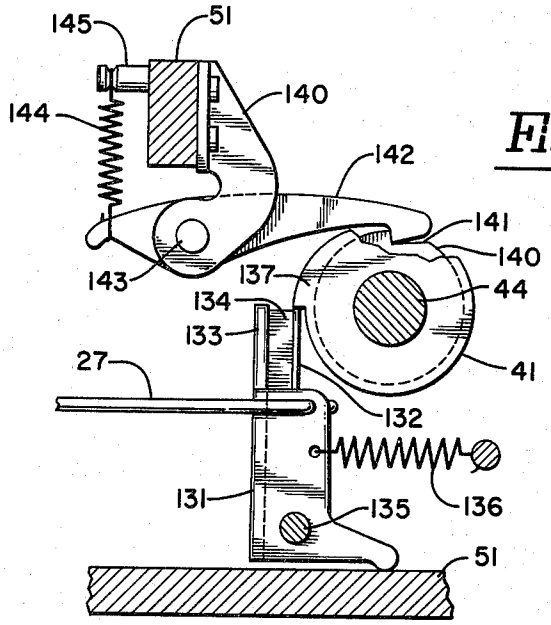

Fig. 9

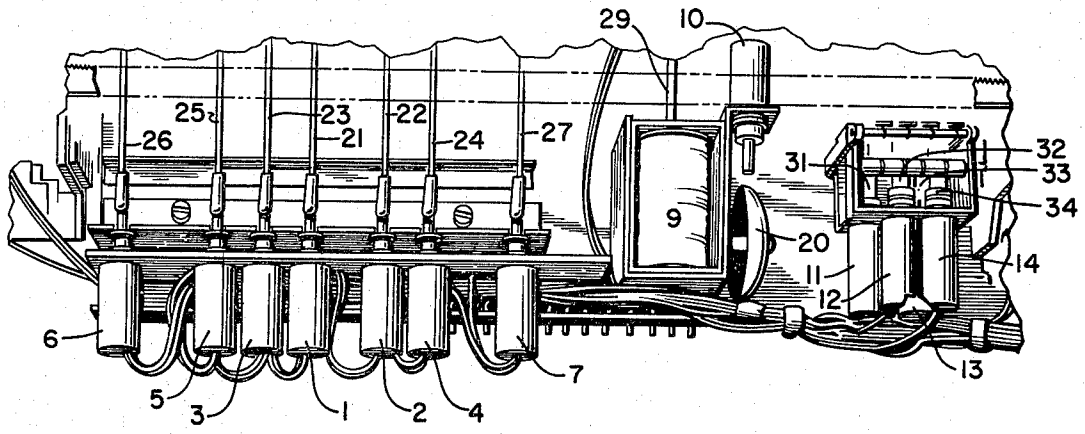

Fig. 10

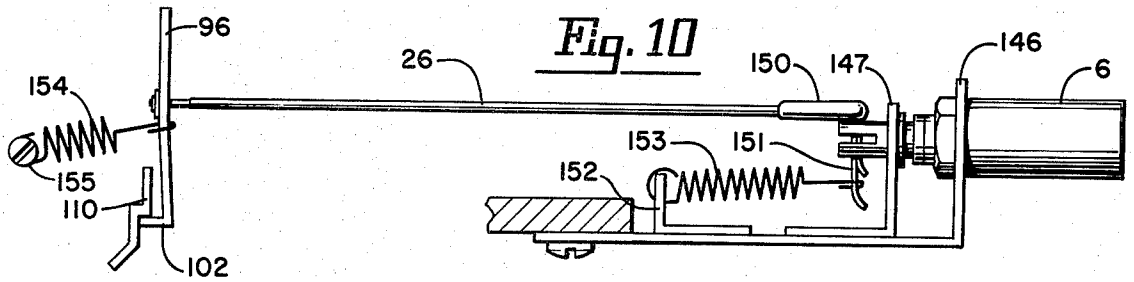

Fig. 11

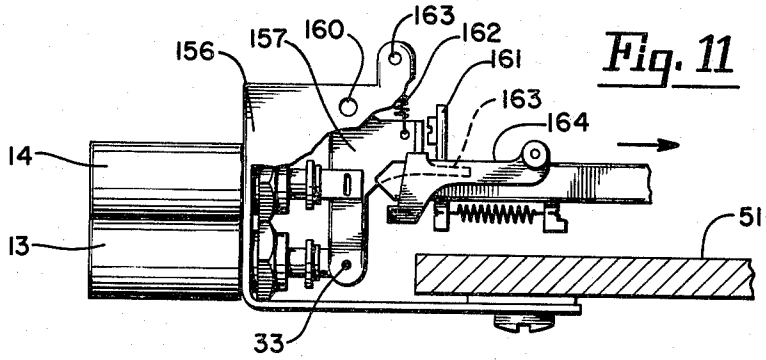

Fig. 12

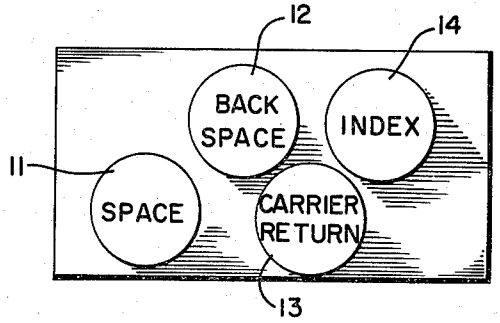

Fig. 13

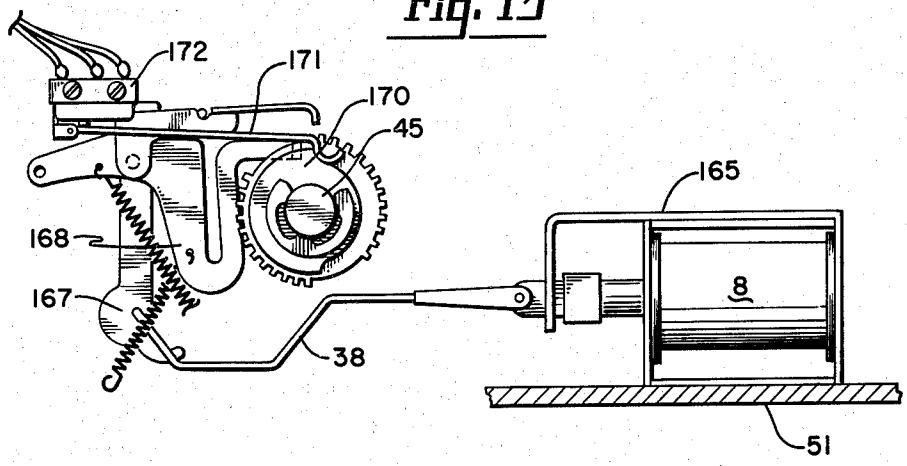

Fig. 15

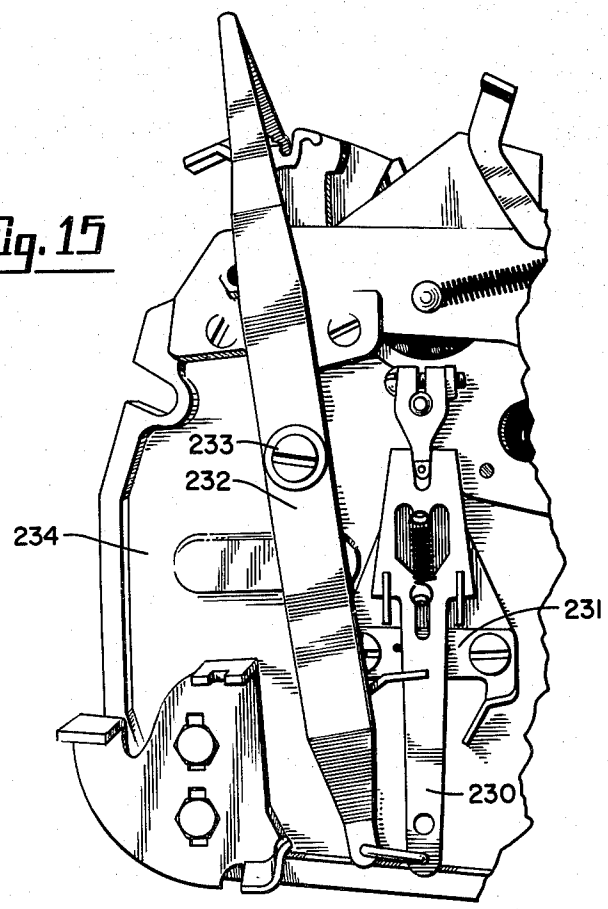

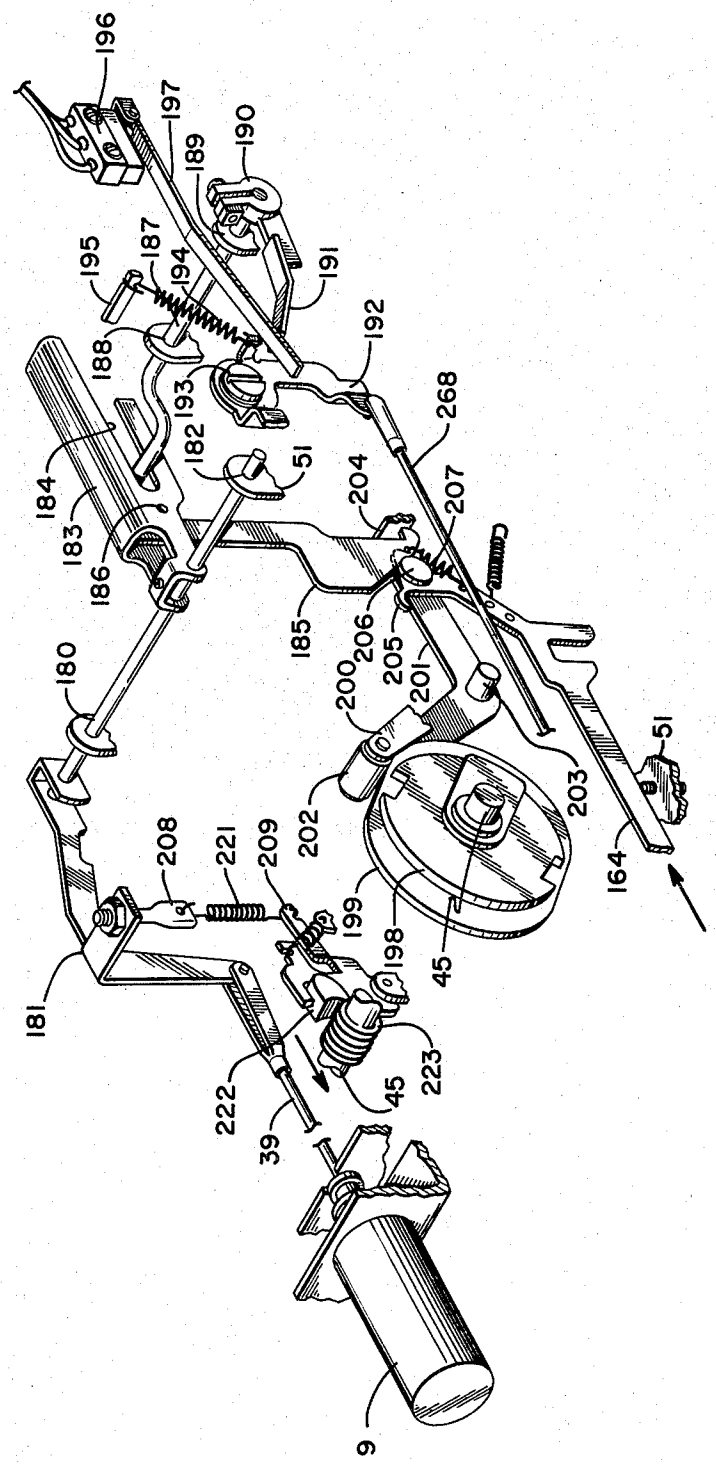
196
197
189
190
195
187
194
191
188
192
193
268
182
51
184
204
207
183
186
185
206
205
180
200
201
203
51
202
164
208
221
209
199
198
45
181
223
222
45
39
9

Fig. 14

Fig. 16

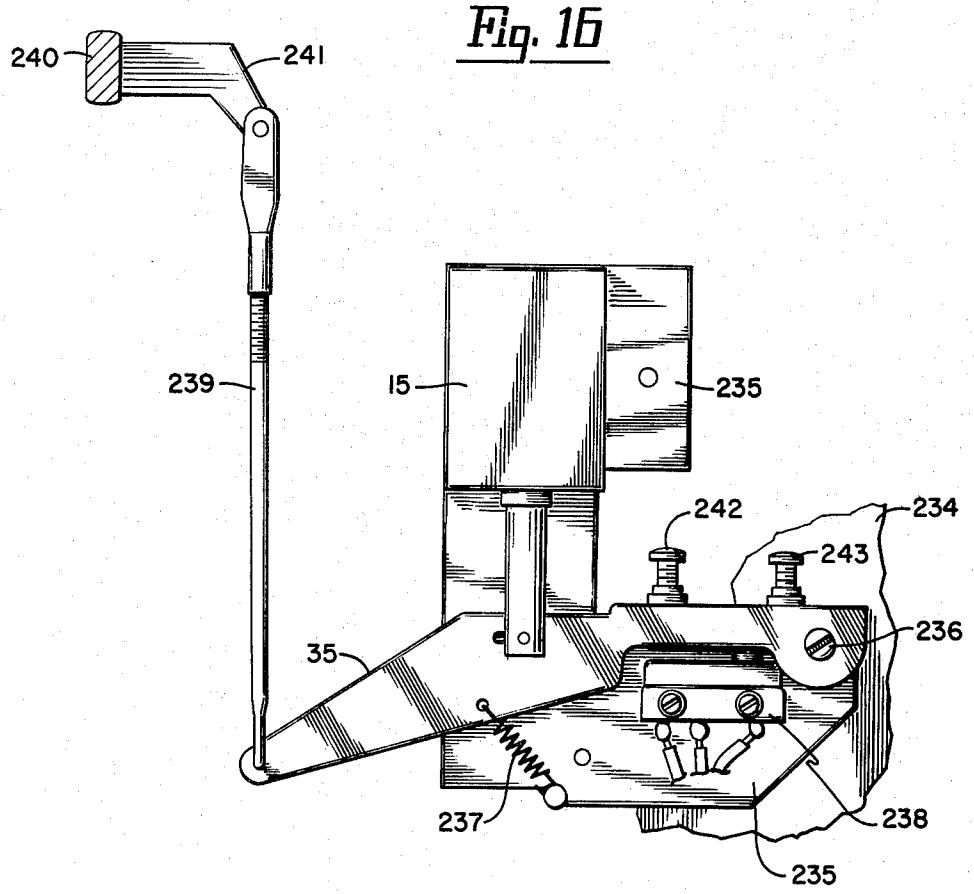
240
241
239
15
235
242
234
243
236
35
237
238
235

Fig. 17

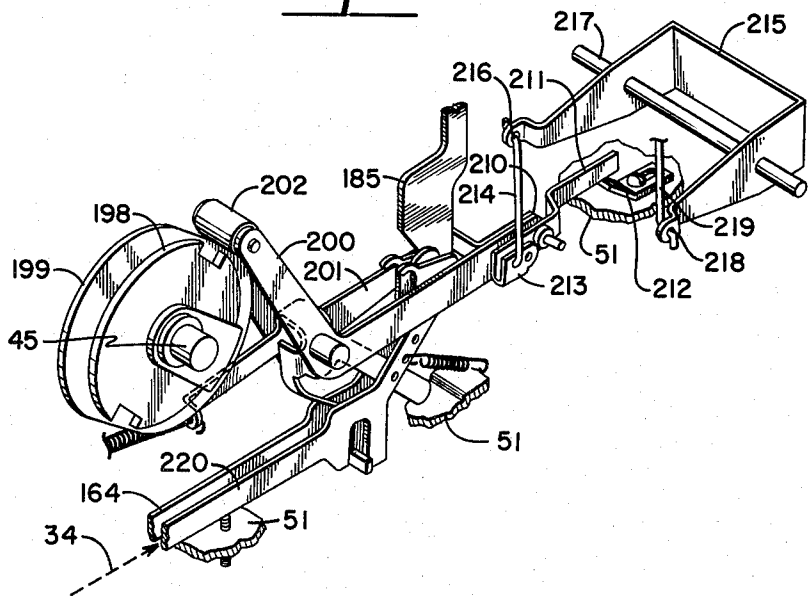
217
215
216
211
210
185
214
202
198
200
201
199
45
213
51
212
219
218
51
220
164
51
34

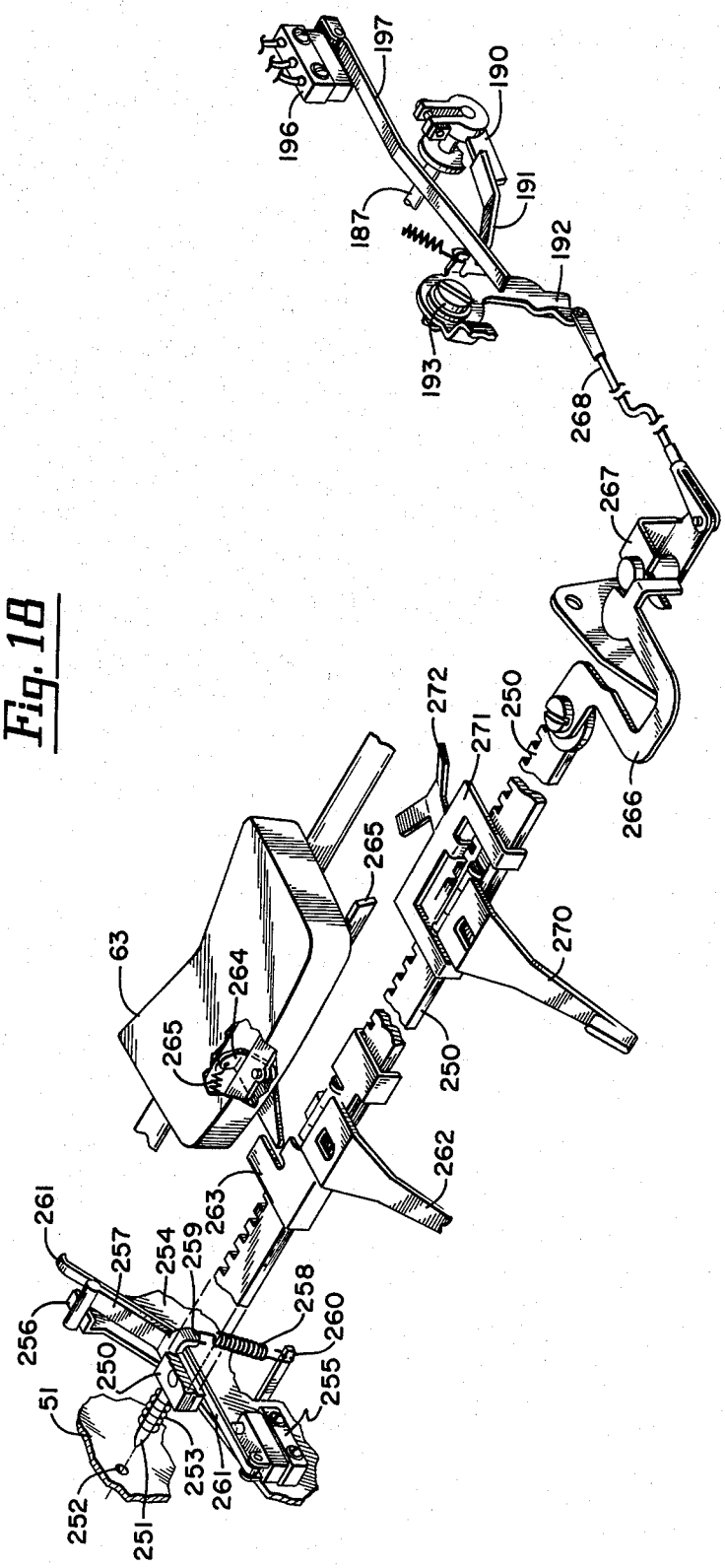
196
197
190
191
187
192
193
268
267
266
272
271
250
270
265
63
264
265
250
262
263
261
257
254
259
258
260
256
250
255
51
253
261
252
251

Fig. 18

Fig. 19

DIODE PLACEMENT CHART

KEY	1	2	3	4	5	6	7	
1	X	X		X	X	X		
2		X			X	X		
3		X		X	X	X		
4	X			X	X	X		
5	X		X		X	X		
6			X		X	X		
7	X		X	X	X	X		
8			X	X	X	X		
9					X	X		
0	X				X	X		
A			X	X	X			
B						X		
C			X	X		X		
D	X		X	X		X		
E	X		X			X		
F		X		X				
G	X	X		X				
H	X							
I			X		X			
J	X	X						
K			X			X		
L	X			X		X		
M	X	X		X	X			
N		X				X		
O	X			X	X			
P	X		X					
Q			X					
R	X		X	X	X			
S	X				X			
T	X	X				X		
U		X		X		X		
V		X		X	X			
W					X			
X	X	X		X		X		
Y	X							
Z	X	X			X	X		
;	X		X	X				
COMMA (,)			X	X				
/	X			X				
1/2	X	X			X			
"		X						
.		X			X			
APP.(')	X		X		X			
HYPHEN								←SPECIAL INPUT
TAB	X						X	
CAR. RET.		X					X	
SPACE			X				X	
INDEX				X			X	
L. RET					X		X	
BK. SP.						X	X	

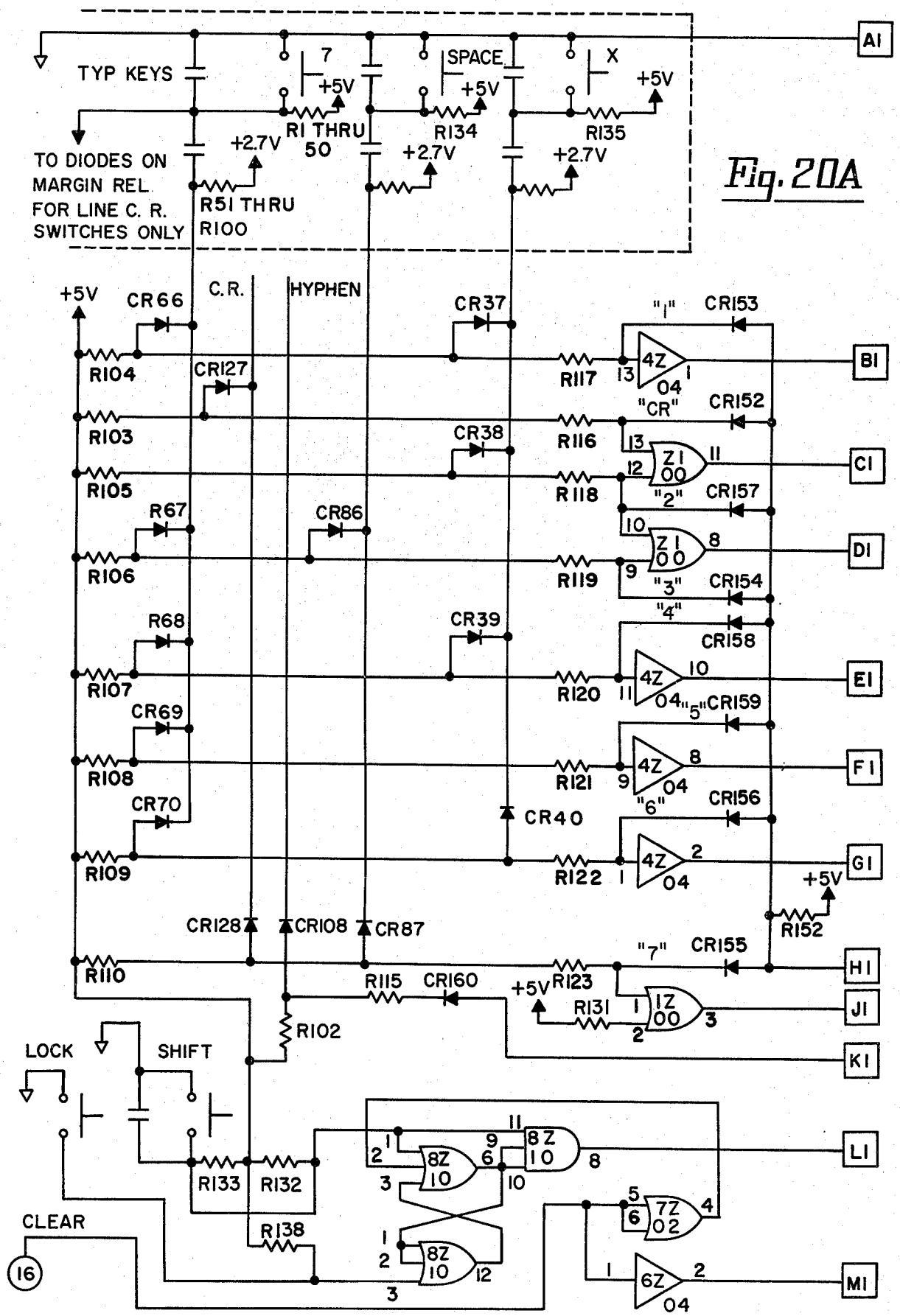
TYP KEYS
TO DIODES ON MARGIN REL. FOR LINE C. R. SWITCHES ONLY
7
SPACE
X
+5V
+2.7V
R1 THRU 50
R51 THRU R100
R134
R135
C.R.
HYPHEN
CR66
CR37
CR127
CR38
R67
CR86
R68
CR39
CR69
CR70
CR40
CR128
CR108
CR87
R104
R103
R105
R106
R107
R108
R109
R110
R117
R116
R118
R119
R120
R121
R122
R123
R115
R131
R152
R102
R133
R132
R138
CR153
CR152
CR157
CR154
CR158
CR159
CR156
CR155
CR160
"1"
"CR"
"2"
"3"
"4"
"5"
"6"
"7"
4Z 04
Z1 00
1Z 00
8Z 10
7Z 02
6Z 04
LOCK
SHIFT
CLEAR
16
A1
B1
C1
D1
E1
F1
G1
H1
J1
K1
L1
M1

Fig. 20A

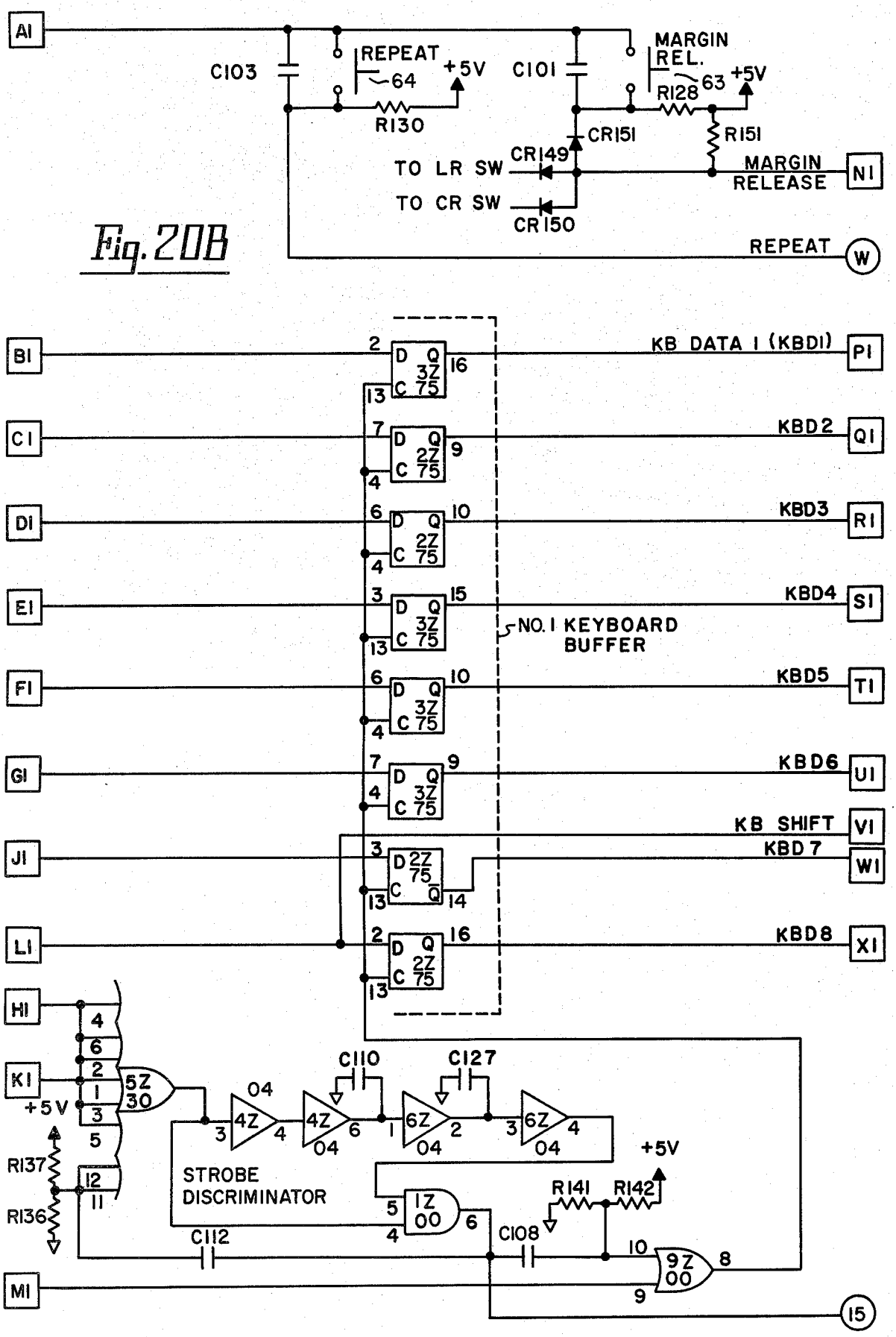
A1
C103
REPEAT
64
+5V
R130
C101
MARGIN
REL.
63
+5V
R128
R151
CR151
CR149
TO LR SW
TO CR SW
CR150
MARGIN
RELEASE
N1
REPEAT
W
B1
C1
D1
E1
F1
G1
J1
L1
H1
K1
M1
KB DATA 1 (KBD1)
P1
KBD2
Q1
KBD3
R1
KBD4
S1
NO. 1 KEYBOARD
BUFFER
KBD5
T1
KBD6
U1
KB SHIFT
V1
KBD7
W1
KBD8
X1
+5V
R137
R136
5Z
30
04
4Z
C110
C127
6Z
STROBE
DISCRIMINATOR
1Z
00
R141
R142
C112
C108
9Z
00
15

Fig. 20B

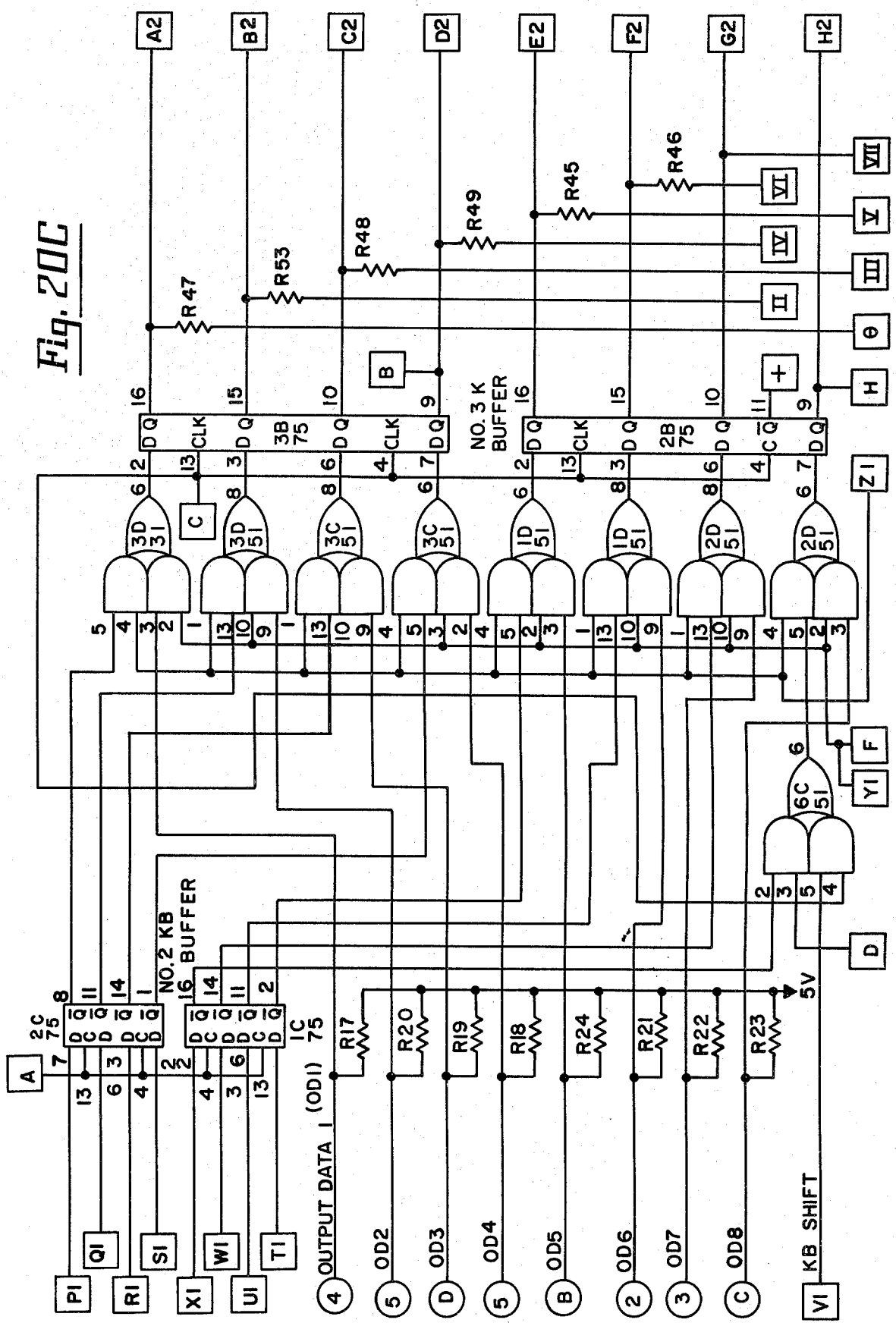
Fig. 20C
A2
B2
C2
D2
E2
F2
G2
H2
R47
R53
R48
R49
R45
R46
NO. 3 K BUFFER
3B 75
2B 75
3D 31
3D 51
3C 51
1D 51
2D 51
6C 51
NO. 2 KB BUFFER
2C 75
1C 75
R17
R20
R19
R18
R24
R21
R22
R23
5V
OUTPUT DATA 1 (OD1)
OD2
OD3
OD4
OD5
OD6
OD7
OD8
KB SHIFT
P1
Q1
R1
S1
X1
W1
U1
T1
V1
Z1
Y1
A
B
C
D
E
F
G
H

Fig. 20D

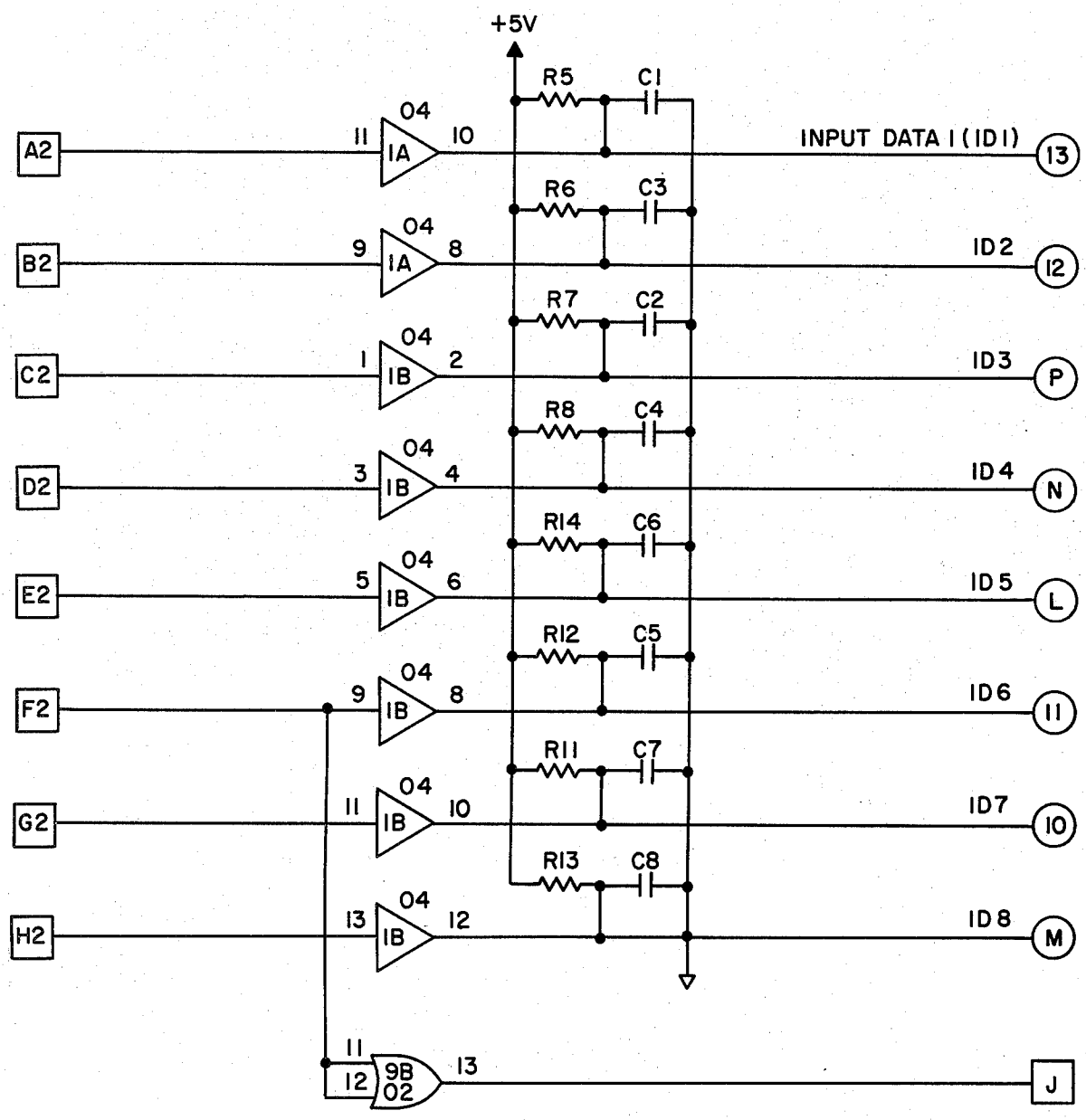
+5V
R5
C1
R6
C3
R7
C2
R8
C4
R14
C6
R12
C5
R11
C7
R13
C8
A2
B2
C2
D2
E2
F2
G2
H2
04
1A
1B
9B
02
INPUT DATA 1 (ID1)
ID2
ID3
ID4
ID5
ID6
ID7
ID8
13
12
P
N
L
11
10
M
J

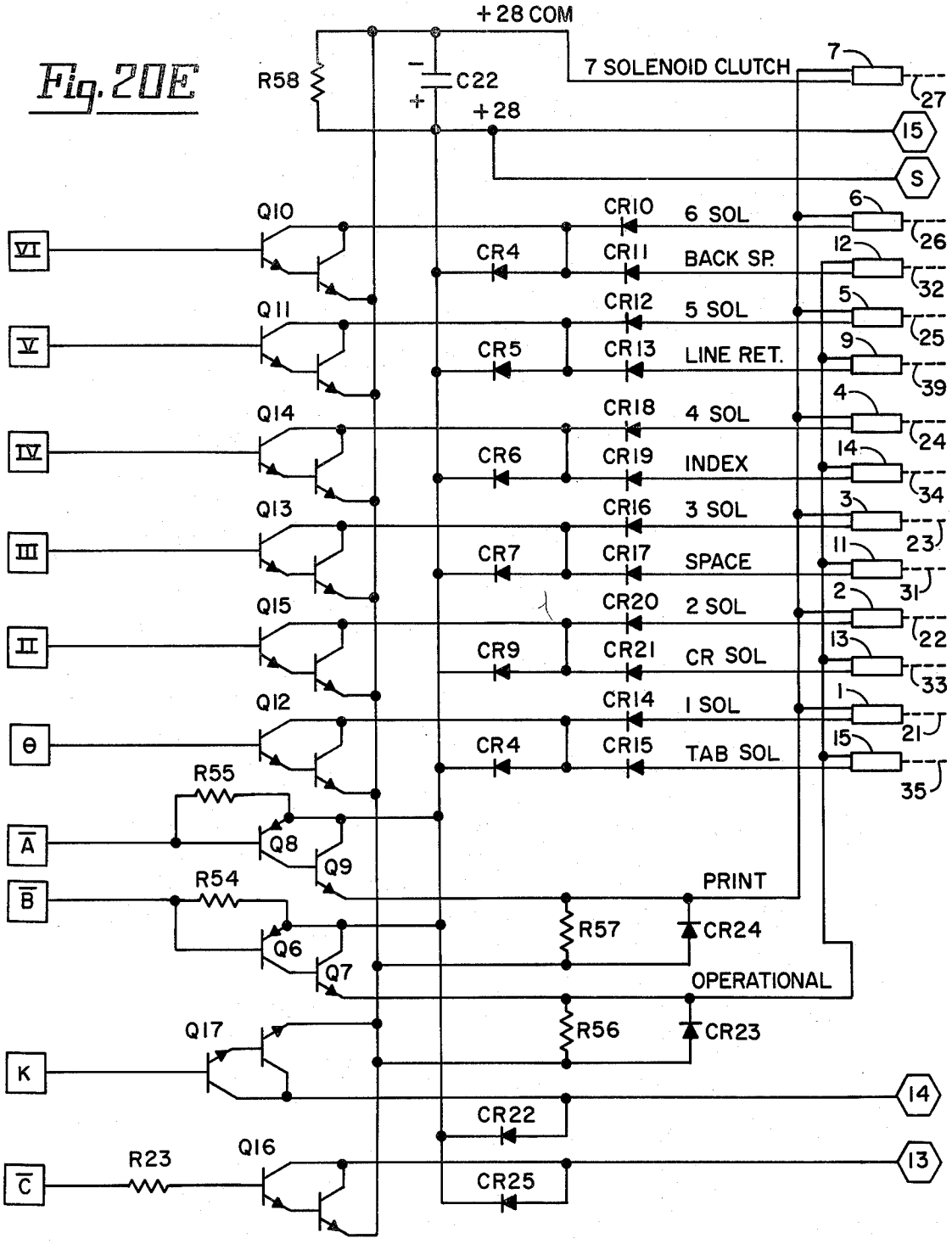
Fig. 20E
+28 COM
R58
C22
+28
7 SOLENOID CLUTCH
7
27
15
S
Q10
CR10
6 SOL
6
26
VI
CR4
CR11
BACK SP.
12
32
Q11
CR12
5 SOL
5
25
V
CR5
CR13
LINE RET.
9
39
Q14
CR18
4 SOL
4
24
IV
CR6
CR19
INDEX
14
34
Q13
CR16
3 SOL
3
23
III
CR7
CR17
SPACE
11
31
Q15
CR20
2 SOL
2
22
II
CR9
CR21
CR SOL
13
33
Q12
CR14
I SOL
1
21
θ
CR4
CR15
TAB SOL
15
35
R55
Q8
Q9
Ā
R54
B̄
PRINT
R57
CR24
Q6
Q7
OPERATIONAL
Q17
R56
CR23
K
14
CR22
R23
Q16
C̄
13
CR25

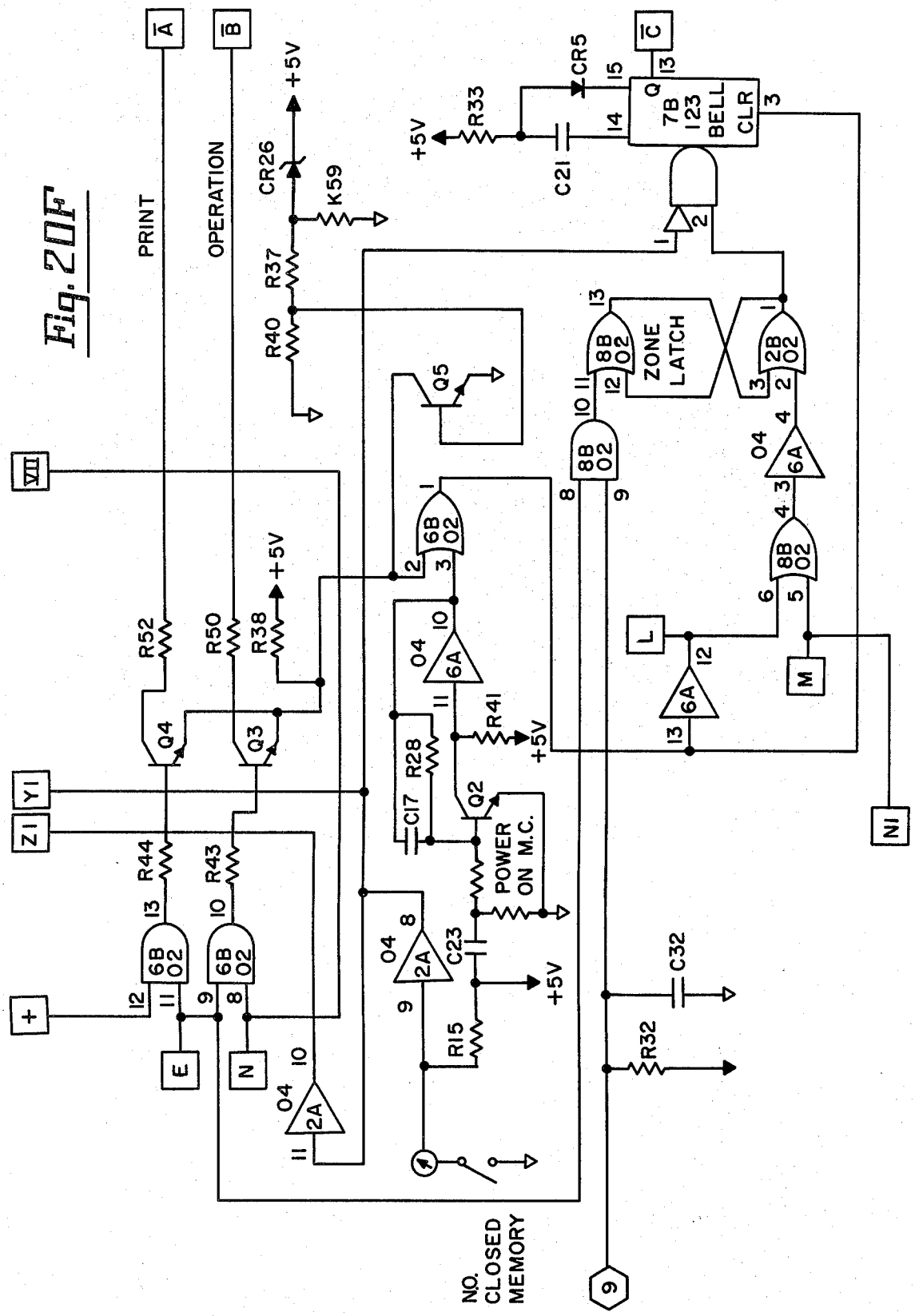
Fig. 20F
PRINT
OPERATION
+5V
CR26
K59
R37
R40
R33
CR5
C21
7B 123 BELL CLR
ZONE LATCH
8B 02
2B 02
6B 02
04 6A
04 2A
Q5
Q4
Q3
Q2
R52
R50
R38
R44
R43
R41
R28
C17
C23
R15
POWER ON M.C.
C32
R32
N.O. CLOSED MEMORY

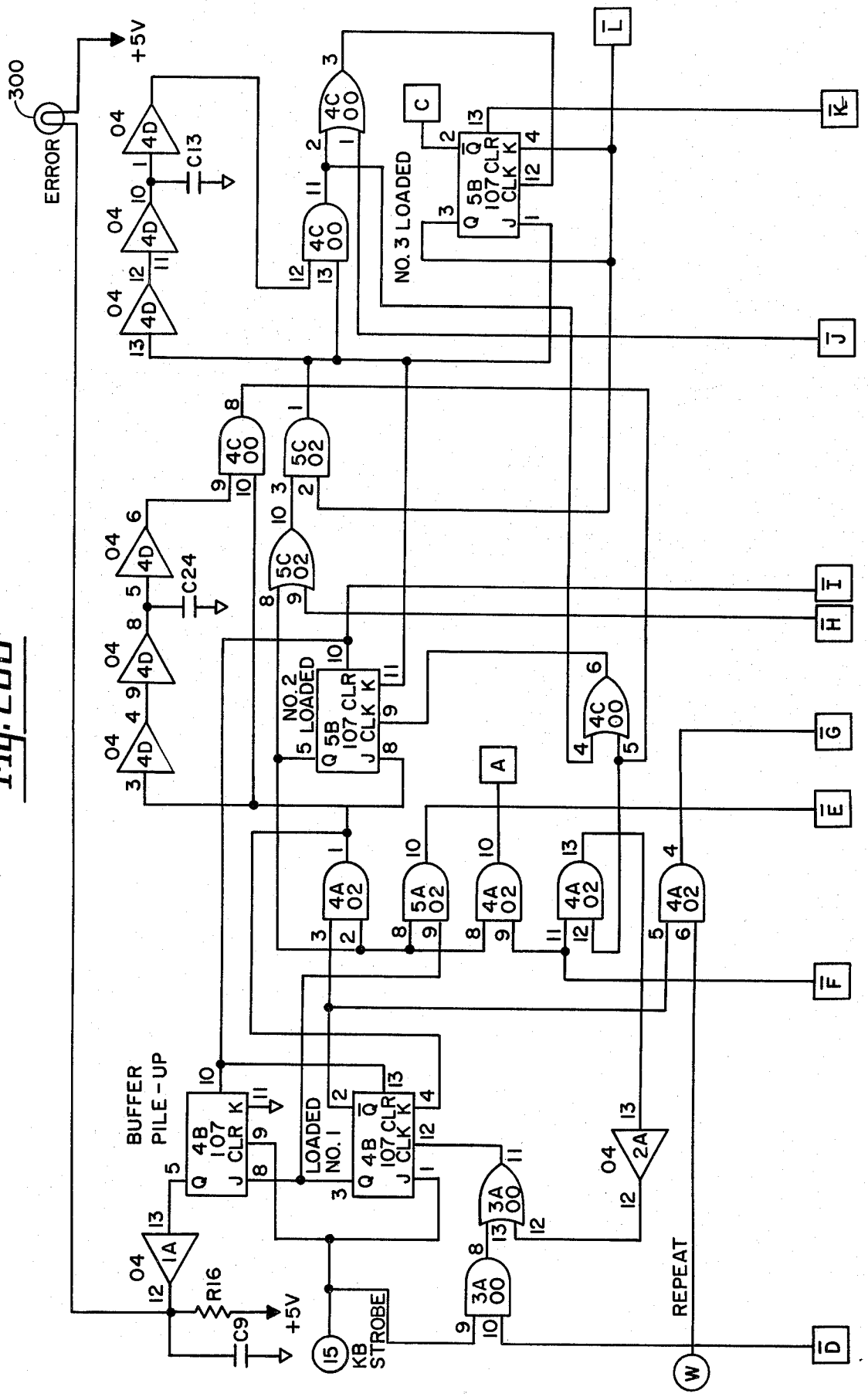
300
ERROR
+5V
04
4D
C13
4C
00
C
NO. 3 LOADED
5B
107 CLR
J CLK K
Q
L
K
J
5C
02
C24
NO. 2
LOADED
I
H
G
A
E
4A
02
5A
F
BUFFER
PILE-UP
4B
107
LOADED
NO. 1
3A
2A
1A
R16
C9
KB
STROBE
REPEAT
D
W

Fig. 20G

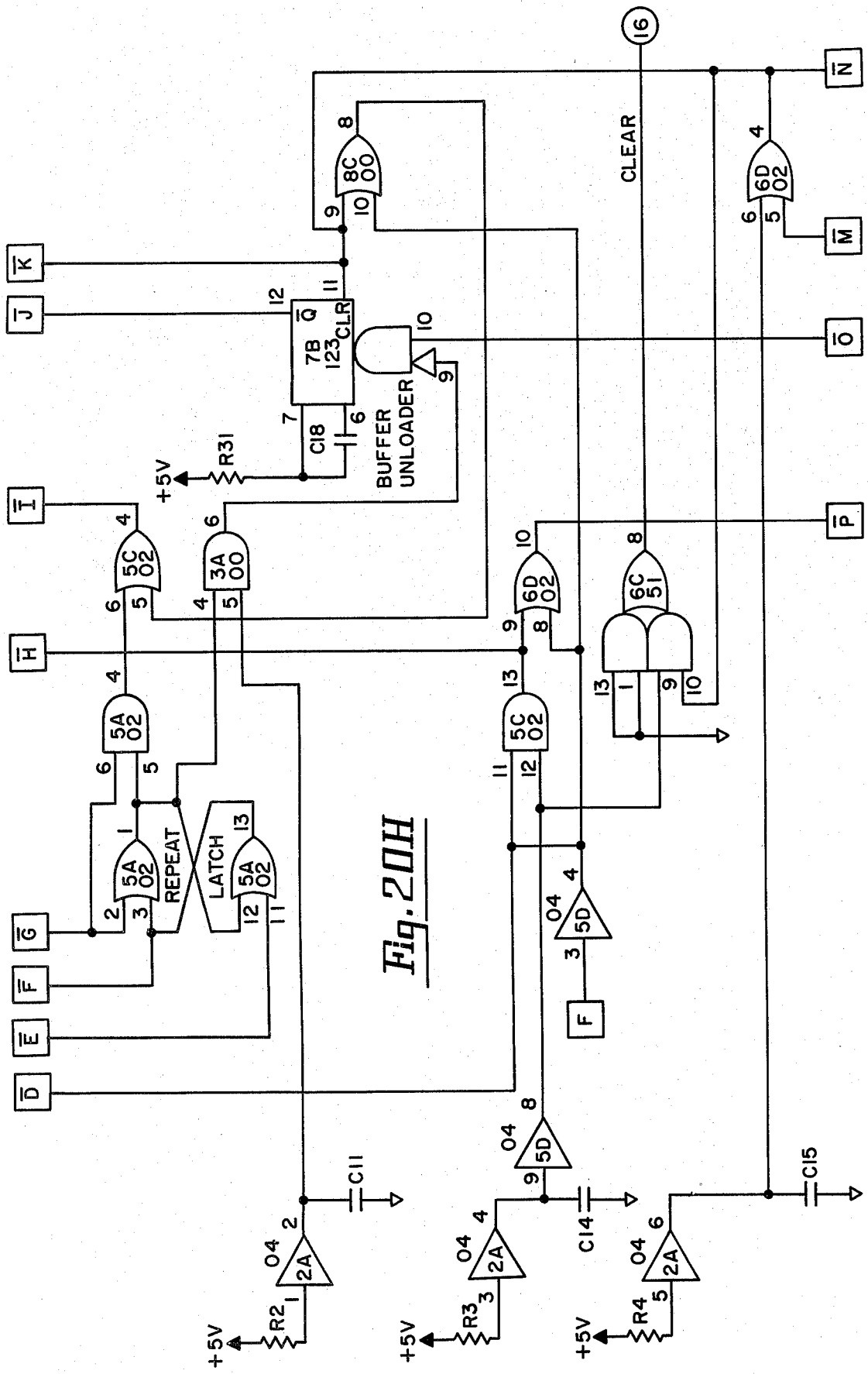
16
CLEAR
8C 00
6D 02
7B 123
CLR
BUFFER UNLOADER
C18
R31
+5V
5C 02
3A 00
6D 02
6C 51
5A 02
REPEAT
LATCH
04 5D
04 2A
C11
C14
C15
R2
R3
R4

Fig. 20H

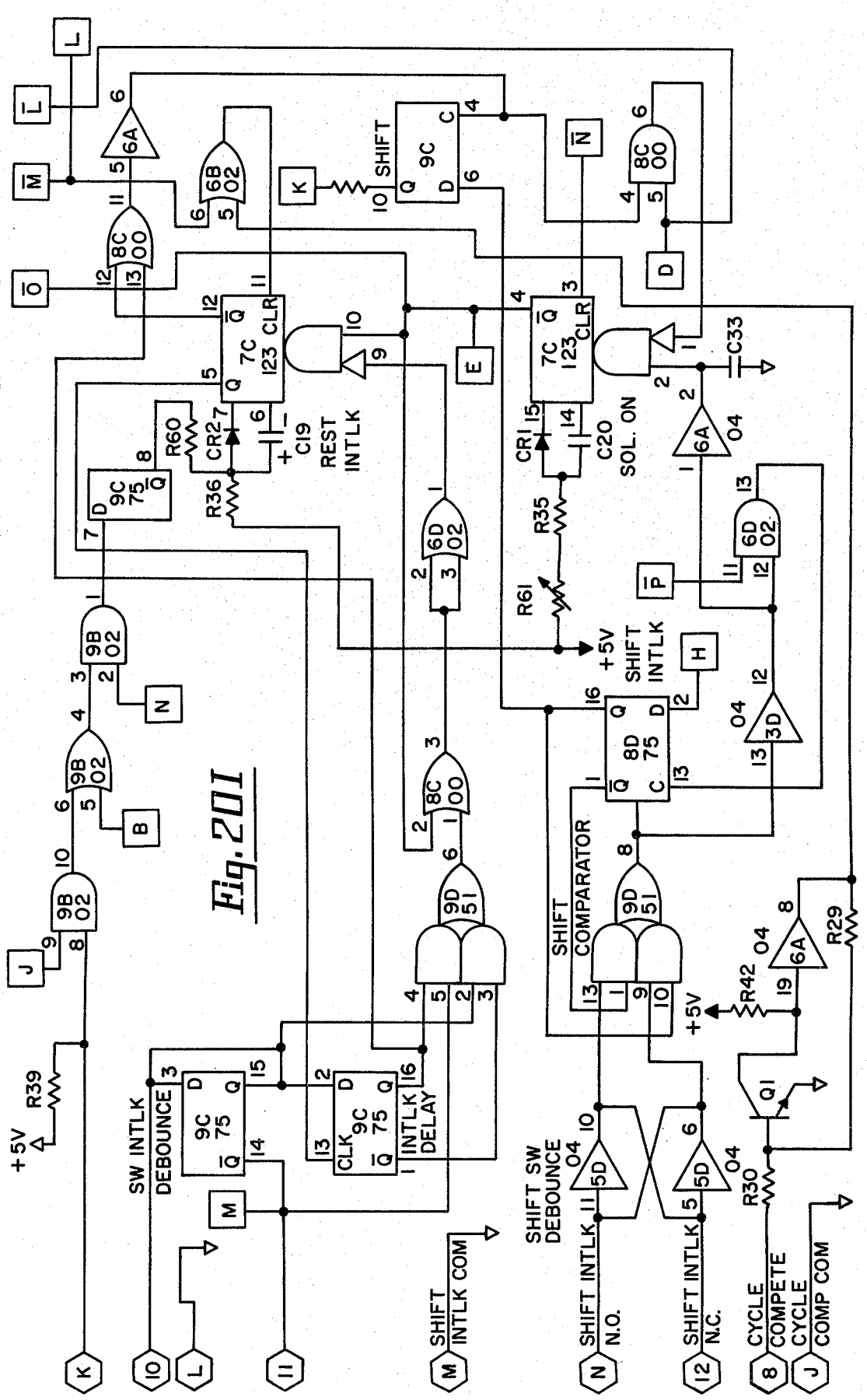
SHIFT
9C
7C
123
CLR
REST
INTLK
C19
R60
CR27
R36
9C
75
6A
6B
02
8C
00
6D
02
9B
02
9D
51
8D
75
SHIFT
INTLK
+5V
R61
R35
CR1
C20
SOL. ON
C33
04
3D
SHIFT
COMPARATOR
R42
R29
Q1
R30
R39
SW INTLK
DEBOUNCE
INTLK
DELAY
SHIFT SW
DEBOUNCE
5D
SHIFT INTLK
N.O.
SHIFT INTLK
N.C.
CYCLE
COMPETE
CYCLE
COMP COM
SHIFT
INTLK COM
Fig. 20I

Fig. 20J

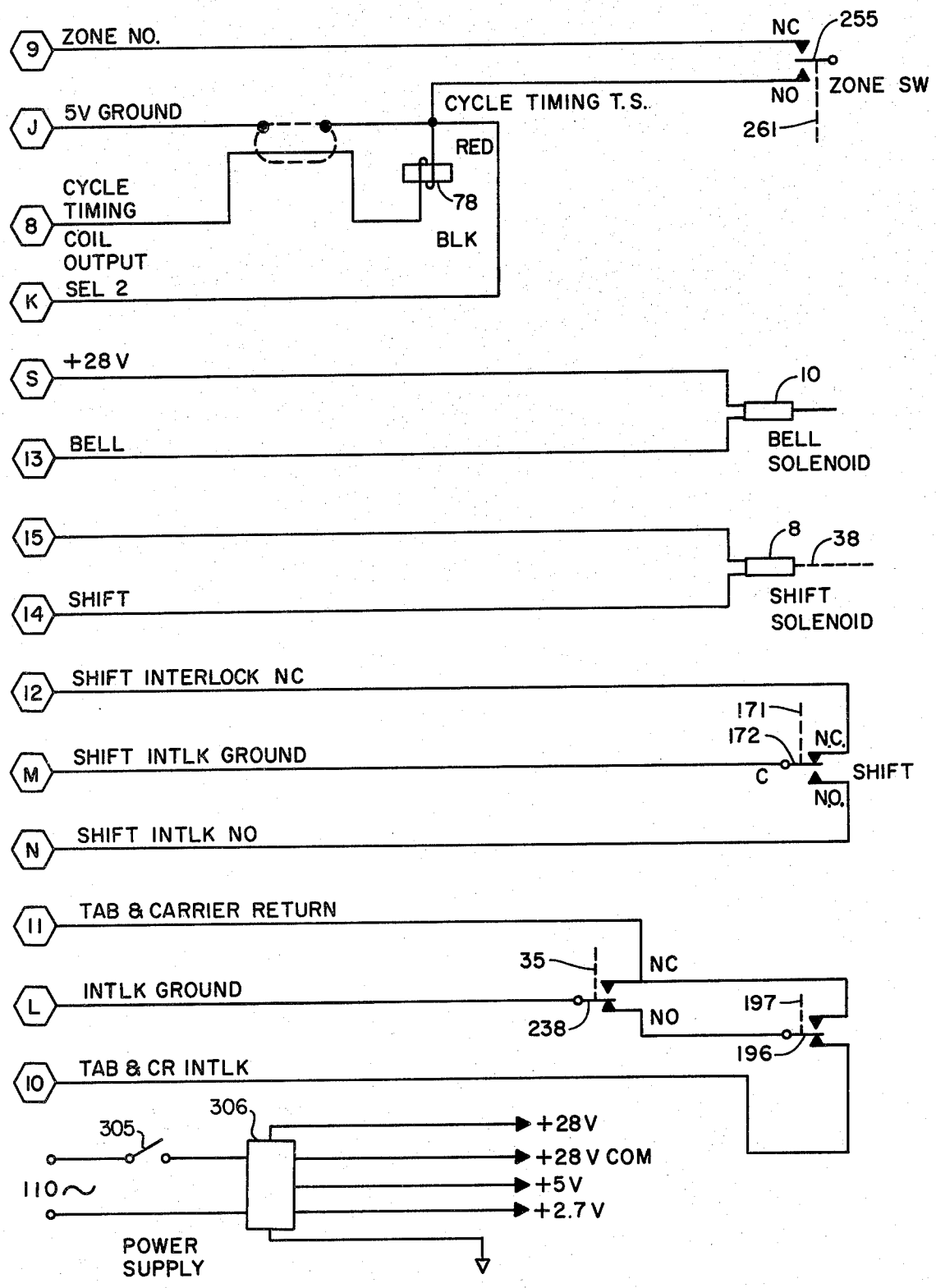
9
ZONE NO.
NC
255
NO
ZONE SW
261
J
5V GROUND
CYCLE TIMING T.S.
RED
78
BLK
8
CYCLE TIMING COIL OUTPUT
K
SEL 2
S
+28 V
10
13
BELL
BELL SOLENOID
15
8
38
14
SHIFT
SHIFT SOLENOID
12
SHIFT INTERLOCK NC
171
172
N.C.
M
SHIFT INTLK GROUND
C
SHIFT
N.O.
N
SHIFT INTLK NO
11
TAB & CARRIER RETURN
35
NC
L
INTLK GROUND
238
NO
197
196
10
TAB & CR INTLK
306
305
110~
+28V
+28 V COM
+5V
+2.7 V
POWER SUPPLY

TYPEWRITER WITH ELECTRONIC KEYBOARD

GENERAL DESCRIPTION

This invention relates to the field of typewriters and more particularly to the use of an electronic keyboard and storage mechanism to drive the typewriter printer.

The present invention is particularly adapted for typewriters of the type including a spherical print head or ball having two degrees of control, that is both tilt of the ball and rotation of the ball. Typewriters which are sold by International Business Machines Corporation designated as Selectric are of the type just mentioned and for additional operating features of this particular typewriter, reference may be had to U.S. Pat. No. 2,919,002 and additional reference may be had to certain features found in U.S. Pat. No. 3,233,715.

Typewriters such as the ones mentioned in the two references just set forth and generally sold under the Selectric name include a carriage having a 15 inch writing line which prints some 10 characters to the inch. The print head may be ordered with different styles of type and used with either a fabric or film ribbon. Upon improving the typewriter in accordance with the teaching of the invention, certain functional changes will be observed. For instance, the Tab Set and Clear functions are moved from the typewriter keyboard to a position adjacent the copy control lever for reasons which will be explained hereinafter.

In keeping the code which is used to actuate the print head or ball, 7 print selection solenoids are used, two for the tilt position of the ball and four for the rotational position of the ball with another print solenoid being used to actuate the typewriter clutch.

In addition to the print selection solenoids, 6 operational solenoids are used for the functions of Tab, Carrier Return, Space, Index, Back Space, and Line Return functions. The Line Return function is added to increase the versitility of the typewriter, its purpose being to return the Carrier to the lefthand margin without indexing the platen, which is particularly useful for the purpose of underlining.

Three feedback switches are used in the circuit to compensate for the variable time operation of functions for Tab, Carrier Return, and Shift. The feedback switches are used to lock the keyboard on incoming commands until the previous function is performed. In addition, a zone switch is used to stop the right-hand movement of the carrier upon reaching a predetermined point.

The cycle timing mechanism is also used in the nature of a contactless switch which is driven by the print shaft to provide a signal showing the duration of the print cycle. Through the use of this print timing signal, clutch and input latch wear is minimized and permits input signals to be fed into the typewriter as fast as the typewriter will accept the data.

The electronic keyboard is made up of keyboard switches using gold alloy crossbar wiping contacts such as the Oak series 400 keyboard switches manufactured by Oak Manufacturing Co. of Crystal Lake, Illinois. The switches are directly mounted on a printed circuit board which produces the proper code through the use of a diode matrix. These switches feature the N-key rollover feature which are used in a 3 character buffer. The 3 character buffer enables two keys to be depressed within three microseconds without a loss of data. The keys are connected to a printed circuit board

which produces the data code for the character to be printed and situated adjacent thereto, is another printed circuit board which contains the keyboard buffer and typewriter driver logic circuits. These various elements all occupy the space which is normally used by the various key levers, cross rods and interposers.

The keyboard also includes the addition of the power On-Off Switch and the Margin Release switch which permits the carriage to move further to the right a predetermined number of spaces before being stopped. Additionally, the keyboard contains a Line Return key which returns the carrier to the left side of the typewriter without indexing and this is particularly useful where external control signals are applied to the typewriter since it reduces the number of codes required in operating the typewriter for underscoring. The keyboard also includes a Repeat key and depressing this key causes any key to become repetitive as long as the Repeat key is depressed. The other functions which are normally associated with the typewriter just described will not be discussed at this time.

The present invention differs from most typewriters which are available to date using input-output purposes since those presently available use switches which monitor the mechanical movement, thus changing the mechanical motion into one of an electrical output. This particular arrangement presents an inherent problem because while the printer may type a proper character, one of the monitoring switches may fail or due to the mechanical linkages, overlap in its timing sequence and thus produce an erroneous electrical output signal. It has been generally noticed that the faulty output is most often detected when an operational key such as the Space, Shift, etc. and a character key are depressed almost simultaneously. Because of the relative slowness and inherent loose-fitting arrangements in the mechanical interlocks, an erroneous print of a character or output may occur. For instance, the IBM Selectric has a unique keyboard weakness which is known generally in the trade as "flicking" which exhibits itself when a typist depresses a burst of keys or fails to fully depress a key. Either of the conditions just described, causes the typewriter clutch to trip without having the keyboard interposers latch to pull the selector latches, resulting in the typewriter printing a "—." While the mechanical keyboard may be adjusted to minimize this particular problem, it does not appear that it may be adjusted to eliminate the problem.

In the present invention, the mechanical keyboard from the Selectric is removed, leaving only the printer portion of the typewriter. Thus all of the tolerances and adjustments which can be cumulative are thus eliminated and solenoids are used to drive and operate the print mechanism. Through the use of the electronic keyboard with the N key rollover feature, the keys with the exception of the Shift key and control keys, have pulsed outputs of two microseconds or less. Due to the short microsecond pulses, the speed with which the printer may be operated provides complete freedom to the typist who had previously been limited in typing speed through the mechanical interlocks of the keyboard. Through the use of an electronic logic circuit, each code is received on a "first come, first served" basis, regardless of how many keys are held depressed. If the typist is able to type faster than the printer can print, the information is stored electronically in a three character buffer.

Once a key is depressed, an electronic signal is sent to the solenoid drivers of the printer and the signal is also made available to be sent through a connector to external or auxiliary equipment which may be connected to the typewriter. Because the keyboard is completely buffered, intercharacter and operational typing can be applied to the printer and to an auxiliary mechanism without having to resort to being aware of the mechanical limitations. Thus the stacking of two codes because of mechanical timings is virtually eliminated in the instant invention.

Upon closure of a keyboard switch, direct current is differentiated and the pulse is converted to the typewriter code through the use of a diode matrix. The matrix actuates a buffer which is interlocked only when the next two buffer stages are filled, thus allowing the typist to be as much as three characters ahead of the printer. A buffer control counter is used to store the data until the printer is ready and each entry from the keyboard adds "one" to the counter and each new printer "ready" signal subtracts "one" from the special counter which allows the data to ripple through the three stages of the buffer as the printer calls for it. In other words, the counter adds and subtracts to keep track of the signals which are present and ready to be printed.

The solenoid driver section amplifies the logic level signals and applies them to pulse the appropriate solenoid or solenoids which are connected to the particular latch members of the printer tilt and rotate mechanisms. The "print" solenoids are interconnected through one common lead and the operational solenoids are connected in a like manner. That is, the two groups are maintained separately so that the printing and operational functions do not interfere with each other. To insure that the two functions do not interfere with each other, a logic 7 bit is used to control logic bit levels 1 through 6 to drive the print solenoids through the amplifier transistors, that is where the 7 bit is present. On the other hand, the operational group can only operate when the 7 bit is absent and in this way, one Darlington amplifier can drive either of two solenoids.

The shift solenoid has its own transistor driver and is active when an 8 bit is present and the solenoid is at rest when the 8 bit is absent. Solenoids other than the shift solenoid must be pulsed 35 milliseconds for proper operation of the printer. Because the solenoids have a short response time, after being pulsed, the printer continues to cycle with the chosen character or operation so a "rest" time is required before the next cycle may begin. A timer provides a 40 millisecond delay time signal, but a signal from the cycle timing coil will cancel the "rest" or "delay" time upon the printer being ready to receive another input signal. The Space and Back Space functions utilize the full "rest" time because the printer does not have interlocks which is whenever the "rest" time must be longer than the 40 milliseconds such as during a carrier return or Tab operation, an interlock switch on the printer inhibits another input until the function is complete. The index function also requires a double cycle time period which is provided by a separate timer circuit.

It is therefore a general object of the present invention to provide an improved keyboard mechanism for a single print head typewriter.

It is still another object of this invention to provide an electronic keyboard for a single print head typewriter.

It is still a further object of this invention to provide a diode matrix for coding the print and selected operational keys of a single print head typewriter.

It is still another object of this invention to provide a keyboard for a single print head typewriter having a plurality of code buffers to prevent character pile up.

It is yet another invention to provide electronic means for alternately driving printing and operational solenoids.

It is still a further object of this invention to provide a keyboard for a single print head typewriter having a buffer control counter controlling a plurality of keyboard buffers.

It is another object of this invention to provide an electronic keyboard for a single print head typewriter having a timing mechanism coupled to the print mechanism to increase the printing speed of the typewriter.

It is still another object of this invention to provide means for returning the carriage of a single print head typewriter without indexing the platen.

These and other objects and advantages of the invention will more fully appear from the following description, made in connection with the accompanying drawings, wherein like reference characters refer to the same or similar parts throughout the several views, and in which:

FIG. **1** is a perspective view from above of the invention showing the general placement of the parts in the typewriter;

FIG. **2** is illustrative of the keyboard of a typewriter showing the special keys added for added functions;

FIG. **3** is a perspective view of the drive train including the timing mechanism used with the invention;

FIG. **4** is a perspective view of a bailment mechanism used to actuate the mechanism of FIG. **5;**

FIG. **5** is a perspective view of the tilt control mechanism for driving a single print head of the typewriter through connections of the inventive mechanism;

FIG. **6** is a perspective view of the rotational control mechanism for driving a single print head of the typewriter with connections of the inventions;

FIG. **7** is a side elevation of the apparatus of FIG. **4** illustrating the cooperating mechanism of FIG. **5;**

FIG. **8** is a sectional view of the cycling clutch shown in FIG. **3** including its connecting actuating link;

FIG. **9** is a perspective view of the operating and functional solenoids used to actuate the mechanism shown principally in FIGS. **5** and **6;**

FIG. **10** is a side view of a typical solenoid operator connected to a bailment latch;

FIG. **11** is a side view of the solenoid connections to the operational input assembly of the typewriter;

FIG. **12** is an end elevation view showing the general placement of the operational solenoids;

FIG. **13** is a side elevation view of the typewriter Shift mechanism and interlock switch;

FIG. **14** is a perspective view of a Carrier Return and Line Return mechanism;

FIG. **15** is a perspective view of the Tab Set and Clear mechanisms;

FIG. **16** is a side elevation of the Tab input assembly used in the invention;

FIG. **17** is a perspective view of the Index mechanism of the typewriter;

FIG. **18** is a perspective view of the Margin Release or zone control mechanism;

FIG. **19** is a diagrammatic chart of the diode placement in the keyboard matrix;

FIGS. **20***a* and **20***b* are a schematic of the keyboard electronics;

FIG. **20***c* is a schematic of the second and third electronic keyboard buffer circuits;

FIG. **20***d* is a schematic of the keyboard output circuits;

FIG. **20***e* is a schematic of the solenoid drive circuits;

FIGS. **20***f* and **20***g* are a schematic of the buffer control circuits;

FIGS. **20***h* and **20***i* are a schematic of auxiliary circuits interconnected with the circuits of **20***a* through **20***g;* and

FIG. **20***j* is a schematic of certain solenoid and special switch circuits relating to the typewriter functions.

MECHANICAL MECHANISMS

FIG. **1** discloses a typewriter **50** of the type referred to previously as the IBM Selectric with the cover removed and with the invention incorporated as described generally. Hinged to a base plate **51** is a keyboard **52** shown in general outline and a printed circuit board **53** which contains a diode matrix and a keyboard buffer that will be described in more detail later. A connector **54** connects circuit board **53** to the other electrical circuits such as another circuit board **55** which generally contains the electrical elements found in FIGS. **20***b*, **20***c*, and **20***d*. A pair of connectors **56** and **57** are electrically connected at each end of circuit board **55** to supply the output and input signals. The circuits just described and as will be set forth in more detail later, are used to electrically energize a plurality of solenoids, some **13** of which are shown generally at the bottom central position of the typewriter and are designated as solenoids (reading from left to right) numbered **6, 5, 3, 1, 2, 4,** and **7** which are used to control the tilt and rotational position of a single element printer **60** which is shown in phantom along with a platen **61** of the typewriter. A Line Return solenoid **9** and a Bell Ringing solenoid **10** along with **4** operational solenoids **11, 12, 13,** and **14** are located in the central and right central portion of the typewriter. Solenoid **11** is connected to the Space mechanism, solenoid **12** is connected to the Back Space mechanism, solenoid **13** is connected to the Carrier Return mechanism and solenoid **14** is connected to the Index mechanism. A margin rack **62** is also shown to set out the general location of the operational elements of the typwriter, and a carriage **63** is shown for carrying the printer **60.**

FIG. **2** discloses the keyboard which for the most part is identical to a regular IBM Selectric keyboard. On the left-hand side, a key **63** is designated MAR REL for the margin release key and this particular switch is also found on FIG. **20***b* in the upper portion of the schematic. The Repeat switch **64** has been added and is also found on the upper portion of the schematic in FIG. **20***b*. The On-Off switch **65** on the right side of the keyboard is also found in FIG. **20***j*. The other switches such as Tab, Shift, Shift Lock, Back Space, and Return are shown principally in FIG. **20***a* as typical keys in a manner just described for the Margin Release and Repeat keys, the electrical connections for the circuit being designated through the matrix chart in FIG. **19,** all of which will be explained more fully with reference to the electrical circuit. In addition, a key **66** designated CR-IN is known as a line return switch and returns the carriage to the left minus the indexing function, hence the words line return. An Index switch **67** is electrically connected by way of the matrix chart shown in FIG. **19.**

Reference is now made to the driving mechanism of the typewriter in which a motor **40** of the typewriter is connected to a clutch **41** through a drive belt **42** and a pulley **43.** Clutch **41** is connected to a cycle shaft **44** which is driven when a proper coupling is made through the clutch. An operational cam shaft **45** is connected on the other side of pulley **43** to provide a camming function for controlling certain operations of the typewriter which will be described in more detail later. At the end of shaft **44,** is a spur gear **46** which is shown rotating in a clockwise direction. A pair of elliptical cams **47** and **48** are also connected to cycle shaft **66** in an aligned relationship for cooperation with a bail member which will be described shortly. Spur gear **46** in turn drives **3** additional spur gears, **70, 71,** and **72.** A filter shaft **73** is coupled to and driven by spur gear **71** through idler gear **70.** Idler gear **70** drives spur gear **72** and another spur gear **74** which is connected thereto. Spur gear **74** is connected to a print shaft **75.** The gear ratio between the other gears and gear **74** is such that gear **74** and print shaft **75** make two revolutions for each revolution of the clutch shaft. Secured to an extension of shaft **75** beyond the edge of spur gear **74,** is an aluminum sleeve **76** which contains a magnet **77** inserted in the aluminum sleeve. Sleeve **76** is secured to shaft **75** by any suitable means such as set screws or through the medium of an epoxy material. A coil **78** is held in close proximity to sleeve **76** through the use of a bracket **79** which is secured to the framework of the typewriter through suitable means such as machine screws. The timing coil assembly is used to solve a problem which is inherent in the IBM Selectric typewriter. Normally feedback switch contacts on the typewriter are timed to permit initiation of a "next cycle" prior to the end of the "current cycle." This avoids stopping the machine between cycles and greatly reduces the frequency of engagement and disengagement of the cycle clutch which ultimately reduces mechanical clutch wear while permitting the typewriter to operate at an optimum speed. However, the proper operation of this mode of operation depends upon the proper closure of a switch which is actuated mechanically. Foreign particles, electrical corrosion and other switch contact ailments can greatly reduce the reliability of the system and therefore the timing coil assembly has been used to alleviate this problem. Coil **78** works in conjunction with an iron core which may be in the nature of a machine screw and as shaft **75** rotates, the magnet passes the end of coil **78** and excites the coil to produce both a positive going and negative going pulse (from each pole of the magnet) and the signal from the coil is amplified and the positive or negative going pulse used as the "closed loop" output. Timing adjustments may be made by rotating the sleeve clockwise or counter-clockwise to retard or advance the pulses with respect to the rotational position of the print shaft **75.**

Reference is now had to FIG. **5** in which a tape **80** is connected to a pulley **81** which is spring loaded through a tension spring **82** which supplies the tension to maintain the position of pulley **81,** the pulley being connected to the mechanism for controlling rotation of the single element print head or printer **60.** Another pulley **83** is mounted upon a support **84** which may be considered fixed relative to the frame of the typewriter. Tape **80** passes around pulley **83** and is connected at its extremity **85,** to a post **86.** Another pulley **87** is rotatably mounted on a pivotal support arm **88,** the pivot being formed through a collar **89.** In other words, the

tape passes around pulleys **83** and **87** and is secured at one end to a post **86** and at the other end to pulley **81** and is held under tension by spring **82**. Since tape **80** is of a fixed length, it will be seen that the position of pulley **81** depends upon the distance between pulleys **83** and **87**, the latter of which is movable upon support **88**. Pivotal movement of support **88** is brought about by a control mechanism **90** in the form of a bell crank **91** which pivots on a pin **92**, a link **93** which is pivotally connected to support **88** and links **94** and **95** and tilt latches **96** and **97**. Link **93** is pivotally connected to support **88** by a pin **98** and to bell crank **91** by a pin **99**. Link **94** is pivotally connected to bell crank **91** through a pin **100** and to link **95** by a pin **101**. Displacement of the control assembly **90** is brought about through latches **96** and **97** having at their extremities, a pair of hooked portions **102** and **103** respectively. The hooked portions **102** and **103** are selectively engaged or disengaged with a bailment mechanism which will be described hereinafter. Control of latch **96** is through a link **26** connected to solenoid **6** and control of latch **97** is through a link **25** connected to solenoid **5**. For a further explanation of this particular mechanism, reference is had to the two patents cited earlier herein. Basically, tilt latches **96** and **97** are used to enable four degrees of tilt control to the printer **60**.

FIG. **4** illustrates the bailment mechanism by which latches **96** and **97** of FIG. **5** are engaged and displaced downwardly. Cycle shaft **44** with cams **47** and **48** connected thereto are mounted above a latch bail **104** which is generally in the shape of a rectangular frame pivotally mounted on a shaft **105** which is parallel to cycle shaft **44** and is supported by the typewriter frame. A pair of rollers **107** and **108** are rotatably mounted in the shorter arms of the rectangular frame which engage respectively cams **47** and **48**. Thus when rollers **107** and **108** follow cams **47** and **48**, a pivotal movement is imparted downwardly to latch bail **104**. Latch bail **104** is held under tension by a tension spring **106** to maintain the engagement between the cams and the rollers. A number of slots **109** are formed at the rear of latch bail **104** within which the tilt latches **96** and **97** are selectively received such as shown in FIG. **7**.

FIG. **7** also shows a latch bail plate which is secured to the rear of bail member **104** and cooperates with slots **109** to capture hooked portions **103** and **101** of bail latches **97** and **96** respectively. A tension spring **111** is representative of the springs which are connected to each of the latches to maintain engagement between the end portions of the latches and plate **110**. Link **25** is representative of the numerous links which are connected between the solenoids and the bail latches.

The tilt mechanism of the single element printer has been described and reference is now made to the control for the rotational position of the print head and reference is now made to FIG. **6**.

A tape **112** passes around a pulley **113** on the left and a pulley **114** on the right, both of which are pivotally fixed to a pair of vertically extending arms **115** and **116** respectively. The free end of tape **112** is connected to a fixed post **117** and the other end of tape **112** is connected to a pulley **118** which is used to control the rotational position of the single element printer **60**. The mechanism just described is similar to that described in FIG. **5** where the rotational position of pulley **118** is controlled by the distance between pulleys **113** and **114**, pulley **102** having a spring **119** connected thereto for returning the pulley to its rest position. The rotational position is controlled generally by the rotational mechanism **120** which includes arm **115** which is kept under tension through a spring **121**. The arm **115** is pivoted by a linkage system **122** which includes an adjustable length arm **123** which has its right-hand portion connected to a bell crank **124** which is pivoted about a pin **125**. Bell crank **124** has its vertically extending arm shown broken away to further expose a portion of the mechanism to the rear thereof. The horizontal portion of bell crank **124** is connected to a linkage system **126** which includes three latches **127**, **128**, and **129** which are provided at their lowermost ends with hooked portions such as described with respect to latches **96** and **97** in FIG. **5**. In addition, another latch **130** is used to permit a shifting of the reference point for the vertical position of pin **125** such that the bell crank is shifted an entire amount to provide printing of print head **60** in a different quadrant, this particular movement generally being described as the negative **5** movement of the IBM Selectric mechanism. Movement of bail latches **127**, **128**, **129** and **130** is caused by energizing solenoids **3**, **1**, **2**, and **4** which are respectively connected to the latch bails through four linkages **23**, **21**, **22**, and **24**. It will be seen that by applying a downward force to one or more of latches **127** through **129** or by the failure to apply a downward force through the latches, which are controlled through the solenoids, printer **60** will be rotated from a position of rest to one which designates a proper column for designation of a particular character. Thus, from the mechanisms controlling the tilt and rotation of the single element print head **60** it will be seen that any particular character contained on a print head may be caused to strike that particular character upon a sheet of paper against the platen and thus print the character. It will also be seen from the electrical schematic of the system which will be described later, that output signals may also be sent to a memory system or other device which may use signals representative of the characters which are printed.

It will be observed that the motor **40** of the typewriter **50** is not always operatively coupled to cycle shaft **44** as appears in FIG. **3**. As will be shown, the operational functions of the typewriter are controlled through the clutch such as that disclosed in FIG. **8**.

FIG. **8** discloses the cycle clutch in sufficient detail to disclose the operation of the cam shaft **45**. A latch **131** is disclosed in the form of a plate **132** which is secured to an arm **133** through the use of a block of resilient material **134**. The arm **133** and plate **132** are bonded to both sides of the resilient member **134** and the latch **131** is pivotally mounted on a fixed shaft **135** and is biased against rotation through a member bearing against base **51** by a spring **136**. In normal operation, latch **131** engages a step of a sleeve **137** to prevent rotation of the sleeve. For a further explanation of the clutch, reference may be made to the two references set out above and without going into great detail, reference is had to FIG. **3** in which the shaft **45** and a shaft **44** coaxial therewith, are selectively coupled by clutch **41** of the helical spring type which is well known in the art. An end of shaft **45** extends to the left of the collar (not shown) and is received within a sleeve **137** and an end of the shaft **44** is received within the opposing end of the sleeve **137**. A helical spring (not shown) surrounds the ends of the shafts **44** and **45** in a slide fit relation and is connected at its ends to the sleeve **137** and the shaft **94** respectively. A rod or link **27** is connected to

latch **131** to release the sleeve when the operation of the clutch is desired. A collar **140** having a notch **141** is fixed to shaft **44** through suitable means such as a pin or set screw.

A bracket **148** is mounted on a portion of base member **51** and a detent arm **142** is pivotally mounted on bracket **148** by means such as a rivet **143.** Detent arm **142** is biased clockwise through the use of a spring **144** which extends between an end of latch **142** and a pin **145** on base member **51.** Detent arm **142** engages the notch **141** and thus prevents clockwise rotation of collar **140.** The latch **131** and detent arm **142** are so located that the clutch spring is slightly unwound when the parts are in position as shown in FIG. **8,** and thus the shaft **44** is uncoupled from the shaft **45.** When link **27** is moved to the left, the latch **131** is pivoted counter-clockwise and disengages the plate **132** from the step on sleeve **137.** Due to the increase in diameter in the clutch spring and the winding action of shaft **44,** the spring winds tightly around shaft **44** and shaft **45.** Thereafter, the shafts and the sleeve **137** rotate counter clockwise together until the step on the sleeve **137** engages the latch **132.** Momentum carries the shaft **44** and collar **140** to the point where the detent arm **142** latches in the notch **141** and the clutch spring is slightly unwound. At this point in time, the driven shaft **44** is uncoupled from the driving shaft **45.**

FIG. **9** discloses the relationship of solenoids **1** through **7** with respect to links **21** through **27** and shows the general position of line return solenoid **9** along with the position of bell solenoid **10** which is used to ring a bell **20.** The operational solenoids **11** through **14** will be described in more detail after reference is made to FIG. **10** which shows in more detail the mechanism associated with each of solenoids **1** through **7.** Solenoid **6** is shown as typical of the other solenoids in which bracket **146** is secured to base **51** by a suitable means such as machine screws. Solenoid **6** is connected in a normal manner by having a threaded neck portion of the solenoid held to bracket **146** through a nut and another or secondary bracket **147** is disposed behind bracket **146** and secured to bracket **146** with a plurality of bores formed therein in axial alignment with the solenoid plungers. Bracket **147** is adjustable towards or away from bracket **146** to form a limiting bracket and thus limit the travel of each of the solenoid plungers. An adjustable clevis member **150** is secured to the threaded end of link **26** and is pivotally connected to the plunger member of solenoid **6** through suitable means such as a cotter pin **151.** Another bracket **152** is secured to base plate **51** to the rear of bracket **147** and a tension spring **153** is connected between bracket **152** and cotter pin **151** to maintain a tension on one side of the plunger which is substantially equal to another tension spring **154** that is connected between latch bail **96** and a pin **155.** Thus when link **26** is drawn by the plunger of solenoid **6,** the tension on each side of the plunger is substantially equal and thus binding is reduced to a minimum. With the arrangement just described, the total travel allowed through the solenoid plungers is set by the adjustment of bracket **147** and each link may be adjusted individually for correct operation of the mechanism it is to actuate.

The operational section which is shown on the right-hand portion of FIG. **9,** is shown in more detail in FIG. **11.** The operational mechanism is driven through the cam shaft **45** (FIG. **3**) and operates the functions of Space, Back Space, Carrier Return, and Index. The placement of solenoids **11** through **14** are illustrated in FIG. **12.**

As shown generally in FIG. **11,** base plate **51** has attached thereto, an operational input bracket **156** by suitable means such as machine screws. The L-shaped bracket **156** contains four bores at the front thereof which have solenoids **11, 12, 13,** and **14** mechanically fastened thereto through the use of the threaded shanks on the solenoids and their cooperating nuts. Associated with each of the solenoids is a structure similar to that found for FIG. **11** in which the mechanism associated with solenoid **13** is described where a bell crank **157** is pivoted about a common shaft **160** which is secured transversely across the front of bracket **156.** The lower portion of bell crank **157** is connected to solenoid **13** by a pin **33.** In a similar manner, solenoids **11** and **12** are connected by pins **31** and **32** respectively, and solenoid **14** is connected by pin **34.** When solenoid **13** is actuated, it is unlatched from a plate **161** and thus initiates a Carrier Return functions which will be described in more detail with reference to FIG. **14.** After the solenoid is de-energized, a spring **162** which is coupled to bell crank **157** and has its other end connected to a pin **163** on bracket **156,** restores the bell crank and solenoid plunger to its rest position which is determined by a lug **163** on the end of the bell crank, the lug coming to rest against plate **161.** When bell crank **156** is rotated downwardly, the typewriter interposer **164** is actuated so that the operational cam follower, follows the cam present on shaft **145** and imparts movement to a bail mechanism. In a similar manner, each of the other solenoids may be energized to produce the functions of Space, Back Space and Index.

As seen in FIG. **13,** it is also desirable to drive the Shift mechanism and control the Shift mechanism through the electronic keyboard arrangement and in so doing, Shift solenoid **8** is secured to base **51** through suitable means such as machine screws. The plunger movement of solenoid **8** is limited through the use of a limit bracket **165.** An adjustable link **38** is connected between the end of the plunger of solenoid **8** and a lever arm **167** which is used to control the Shift clutch release arm **168.** The Shift clutch is carried on the end of shaft **45.** In order to complete the electrical circuit which will be described later, a Shift cam **170** is secured to cam shaft **45** by suitable means such as a pin or set screw. Cam **170** works in conjunction with a switch arm **171** which is part of a shift interlock switch **172.** As shown in FIG. **3,** the switch follower **171** is at a radius closest to shaft **45** and is shown in the lower case rest position. Upon rotation of shaft **45** approximately 180°, switch **172** will be found in the upper case rest position.

Reference is now made to FIG. **14** in which a shaft **180** is connected to a Line Return arm **181** at its left extremity through suitable means such as set screws. Line Return solenoid **9** is connected to the lower end of Line Return arm **181** through a connecting link **39.** The other end of shaft **180** is journaled in a bearing **182** formed in a portion of the typewriter frame **51.** A Carrier Return latch arm **183** is secured to shaft **180** by suitable means such as set screws and has a forward extending portion in which a "C" shaped opening **184** is formed. A Carrier Return latch **185** is pivotally connected to Carrier Return Latch arm **183** by means of a pin **186** which extends through arm **183** parallel to shaft **180** and between shaft **180** and opening **184.** A crank shaft **187** has the small end of the crank shaft ex-

tending parallel to shaft **180** through opening **184** and is pivotally secured for rotation by a pair of bearings **188** and **189** which are formed in a pair of bracket members which are anchored to base **51.** A Line Return latch **190** is secured to the end of crank shaft **187** opposite the C shaped opening by suitable means such as machine screws to insure it against rotation with respect to shaft **187.** The Line Return latch has an upturned end portion **191** which engages a downwardly extending Line Return latch actuating arm **192** which is pivotally secured about a screw **193** near its upper end. The Line Return Latch actuating arm **192** is shown in its normal position, that is when the Carrier is not being returned to the left portion of the machine. A tension spring **194** is secured between a lug near the upper end of arm **192** and a pin **195** which is also anchored to a portion of base member **51.** A Line and Carrier Return interlock switch **196** has a long actuating arm which rides across end **191** of the Line Return latch **190.**

Shaft **45** supports a pair of clutches, one of which works with the Space and Back Space mechanism and the other of which works with the Carrier Return, and Indexing mechanism. Shown briefly is a clutch wheel **198** which has secured thereto, an operational cam **199** shown in dashed lines. A pair of L shaped arms **200** and **201** have a cam follower **202** secured therebetween for pivotal rotation which follows the outline of cam **199.** Arms **200** and **201** are pivoted about a shaft **203** which is parallel to shaft **180** described previously. The horizontally extending portion of arms **200** and **201** are joined at the right edge by a cross piece **204,** the two arms and cross piece forming a bail. Interposer **164** (also shown in FIG. **11**) is connected through the mechanism shown in FIG. **11** to Carrier Return solenoid **13,** which when actuated cause interposer **164** to move to the right as shown in FIG. **14.** Upon interposer **164** moving to the right, the end of the interposer in the form of the "deer head" **205** urges Carrier Return latch **185** under cross piece **204** so that the bail will pick up the latch. A large head rivet **206** is secured in transverse relationship to end **205** of interposer **164** to hold Carrier Return latch **185** in proper position. Carrier Return latch **185** is held out of engagement with crossbar **204** through the medium of a tension spring **207** connected between the end of Carrier Return latch **185** and a suitable bore formed in interposer **164.**

Line Return arm **181** also has connected to it at a square shank portion, an actuating arm stud **208** which is connected to a clutch actuating arm **209** through a tension spring **221.** Actuating arm **209** carries a shoe **222** which overlies the clutch spring **223** to drive the Carrier Return pinion gear which is found in each of the typewriters described herein. Thus a rotation of shaft **180** initiates the motion of the Carrier Return actuating arm to engage the Carrier Return pinion through the clutch spring. Thus through operation of the Line Return solenoid **9,** shaft **180** may be rotated causing Carrier Return latch arm **183** to rotate, in turn rotating crank shaft **187** to finally move Line Return latch **190** downwardly and thus actuates Line and Carrier Return interlock switch **196** which will prevent any of the printing operations from taking place during return of the Carrier as will be shown in the description of the electrical circuit. It will also be observed that upon the Carrier Return solenoid **13** being actuated, that interposer **164** thus moves Carrier Return latch **185** into engagement with crossbar **204** which then moves downwardly and produces the same action just described. In addition to the Carrier Return function, it is the general procedure to also index the platen at the same time and this is best shown in FIG. **17.**

Arm **200** is extended to the right to form a lever end **210** which has a link **211** pivotally connected thereto. The end of link **211** has its rest position adjusted through the use of a multiplying lever stop **212** which is connected to base member **51.** A clevis member **213** formed at the other end of link **211** has a connecting arm **214** which extends upwardly and is connected to a U shaped transfer arm **215** at a pivot point **216.** Transfer bracket **215** is pivotally connected about a shaft **217** to transfer the motion from point **216** to another pivotal connection **218** where a vertically extending link **219** is used to actuate the pawl mechanism on the end of the platen to index the platen. An interposer **220** is used to actuate the bail member formed of arms **200** and **201** and thus each time the index operation takes place, as long as Carrier Return latch **185** remains in its rest position, the Carrier Return operation will not be performed. Once Carrier Return latch **185** engages crossbar **204,** both Carrier Return and indexing take place.

The functions for Space and Back Space are actuated as described previously through the solenoids which are disclosed in FIGS. **11** and **12** and the mechanism for producing the Space and Back Space operation is the typewriter mechanism which is well known in the Selectric and is similar to that mechanism just described for FIGS. **14** and **17.**

The Tab Set and Clear mechanism is shown in FIG. **15** and has relatively few changes made thereto. As seen in FIG. **15,** Tab Set and Clear arm **230** rides between a pair of stops which are formed on a Set and Clear lever bracket **231.** Instead of having the linkage come from the front of the typewriter to the lower end of arm **230,** a separate arm **232** is installed substantially parallel to arm **230** through a pivotal connection **233** which is formed through a machine screw set into the side of the typewriter casting **234.** Through the use of the upper end of Tab arm **232,** a motion which pulls arm **232** at the top sets the Tab and pushing arm **232** clears the Tab.

On the reverse side of casting **234** is a Tab solenoid bracket **235** which has Tab solenoid **15** connected thereto. The solenoid plunger is connected to a Tab lever arm **35.** Lever arm **35** is connected at one end of bracket **235** through a pivotal connection **236** and has the other end of arm **35** biased to bracket **235** through a tension spring **237.** A Tab interlock switch **238** is actuated by the downward movement of the plunger of Tab solenoid **15** and is used to prevent any printing operation while the Tab function takes place. A Tab torque bar link **239** is connected to the typewriter Tab torque bar **240** through a connecting lever arm **241.** With this modification, the carriage may then be moved to the proper position where the Tab has been set and upon the Tab solenoid being released, Tab interlock switch **238** permits a printing function to take place. A pair of adjusting screws **242** and **243** may be used to adjust the position of arm **35** to respectively coordinate the position of the Tab torque bar and the switch actuation to provide the proper timing sequence for this function.

The Margin Set and Release mechanism is changed somewhat on the typewriter just described and this is found principally in FIG. **18** where a Margin rack **250** is shown. On the left end of Margin rack **250,** a pivot

member **251** extends from the center crosssectional portion of rack **250** and is centered in a bore **252** which is formed in typewriter frame **251.** A compression spring **253** circumscribes pivot **251** biasing rack **250** to the right. A zone switch bracket **254** is also secured to a portion of base member **251** through suitable means such as screws and is disposed beneath pinion **251.** Bracket member **254,** has a zone switch **255** secured thereto through suitable means such as screws. The upper left portion of bracket **254** has a ledge **256** which acts as a stop member for a connecting arm **257** which is fixedly secured beneath rack **250** and extends upwardly with a portion bearing against ledge **256** on the uppermost side. Arm **257** is biased into engagement with ledge **256** through the use of a tension spring **258** connected between a lug **259** on the bottom of arm **257** and an extending lug **260** formed at the bottom of bracket **254.** A switch actuator **261** is pivotally connected to switch **255** for depression of the switch plunger and extends under rack **250** and upwardly to bear against the end of arm **257** which rests against ledge **256.** Thus when rack **250** is rotated so that arm **257** raises upwardly from ledge **256,** switch actuator **261** follows arm **257** to change the switch contacts of switch **255.**

Shown to the immediate right, is the movable left margin stop **262** which has a lug portion **263** that extends upwardly to engage a Carrier stop latch **264** which is carried by ball carrier **263.** Carrier stop latch **264** is biased through the use of a spring **265** and is pivotally secured to Carrier **263** by suitable means such as a pin. To the right of the Carrier stop latch **264,** is a Carrier ramp **265** which is used to engage a portion of the movable right-hand Margin stop which will be explained later. Once the Carrier stop latch engages lug portion **263** of the movable left Margin stop **262,** the rack **250** is carried to the left against compression spring **253** and in so doing, a U shaped link **266** on the right end of Margin rack **250** causes a bell crank **267** to be pivoted clockwise from above and pull a link **268** which is connected to Line and Carrier Return latch keeper **192.** In this manner, latch **190** is raised which energizes Carrier Return interlock switch **196.**

A movable right-hand Margin stop **270** is shown engaging Margin rack **250** and includes a zone switch actuator **271** which is secured about rack **250** by a suitable means such as machine screws. Zone switch actuator **271** has a shoe **272** that extends rearwardly and when Carriage **63** passes thereby, ramp **265** passes under shoe **272** causing it to be raised and thus rotates rack **250,** against actuating zone switch **255.** If the typewriter is used with a magnetic storage system, upon actuation of the Margin Release key, the Carriage **63** is permitted to move to the right six spaces which is controlled through an electrical circuit.

The operation of the mechanical features of the typewriter will become more apparent through their relationship with the various interlock switches and solenoids which are used to actuate the circuit or cause the solenoids to drive certain of the mechanical mechanism just described.

ELECTRICAL MECHANISM

The electrical circuits are described in FIGS. **20** *a* through **20***j* along with a diode placement chart, FIG. **19** which shows the general placement of the diodes in the keyboard network. Also shown in the circuits, are standard symbols which are used for various components such as inverters, gates, flipflops, etc. To help simplify the schematic, which uses a number of integrated circuits, reference is had to a Signetics Digital 54/7400 Data Book published by the Signetics Corporation of **811** East Arques Avenue, Sunnyvale, California 94086. Generally speaking, the 7400 logic family is medium speed TTL and high speed TTL integrated circuits. The family includes a multiple number of functions in a variety of packages. The following chart includes the type number and description as follows:

TYPE	DESCRIPTION
7400	Quadruple 2-Input Positive NAND Gates
7402	Quadruple 2-Input Positive NOR Gates
7404	Hex Inverters
7410	Triple 3-Input Positive NAND Gates
7430	8-Input Positive NAND Gates
7451	Dual 2-Wide 2-Input AND-OR-INVERT Gates
7475	Quadruple Bistable Latches
74107	Dual J-K Master-Slave Flip-Flops
74123	Dual Retriggerable Monostable Multivibrators w/Clear

A number of typical keys such as MAR REL, Repeat, the letter *X*, Space, and the numeral 7 are shown on the left-hand portion of FIG. **20***a*. The special keys such as the Margin Release and Repeat have signals which are sent through closure of the switches previously described associated with each key, to circuits in FIGS. **20***f* and **20***g* respectively. However, the last three keys actuate switches which are connected with diodes that trigger number **1** keyboard buffer in FIG. **20***b* through appropriately driven inverters and NAND gates which are appropriately marked with the designations **1,** CR, **2, 3, 4, 5, 6,** and **7.** The lines just described, have output data which is ultimately applied to the solenoids to actuate the printer. the diode placement chart in FIG. **19** is coded in the Selectric code where the numbers at the top of the chart represent the data to be different solenoids **1** through **7.** It will be particularly noted that there is a special input for the hyphen and that each of the operational functions includes a diode connected to line **7** which permits the 7 bit to be present in the print group and to be absent in the operational group. Thus for example, the character *X* shows that diodes should be placed in lines **1, 2, 4,** and **6,** and these are shown as CR-**37** through CR-**40** respectively. As another example, the number **7** requires diodes connected to lines **1, 3, 4, 5,** and **6** which are satisfied by diodes CR-**66** through CR-**70.** The Space function requires a diode connected to line **3** and line **7** and this is carried out through the use of diodes CR-**86** and CR-**87.**

Each key on the electronic keyboard produces a negative differentiated pulse of approximately two microseconds duration which is coded through the diode matrix just explained. In other words, where the typical keys are shown, there would be a key and the appropriate diodes shown in the matrix pattern found in FIG. **19,** all of which would be connected to the lines leading to inverters and NAND gates. A diode "OR" gate senses the data lines prior to reaching the number **1** keyboard buffer and feeds the key pulse to a strobe discriminator which filters out short noise pulses and only allows the legitimate key closures to continue through the circuit and thus provide a clock pulse which is use to admit data into the number **1** keyboard buffer. Once the data is received in keyboard buffer number **1** it will remain there until the next clock pulse is received or until power is turned off in the system. If another key is

depressed while the typewriter is busy printing, the data will be stored in keyboard buffer number **2** which is connected directly to keyboard buffer number **1.** Keyboard buffer number **2** is shown in FIG. **20***c*. A new data entry would still be held in buffer number **1** and as the typewriter prints each of the characters, the code is moved through the buffer stages. That is, the code in buffer number **2** moves into number **3** and then the code in buffer number **1** moves into buffer number **2.**

Once the data has been entered in the keyboard buffers, the keyboard strobe output is pulsed at the input to the solenoid driver circuit which is found principally in FIG. **20***e*. In the event it is desirable to produce output data from the buffer, outputs are obtained through the inverters which are connected directly to the output terminals in FIG. **20***d* which may be applied to a memory system. During the operation of the keyboard, the only keyboard print or operation that will not initiate a keyboard strobe signal is the Shift function. The Shift signal is taken directly from the keyboard through the Shift latch flip-flop or NAND gate which bypasses the buffer. Bypassing the buffer allows the printer to Shift immediately upon key depression prior to printing any character. In addition, the Shift signal is also applied to the number **1** buffer but is not passed on until the buffer is pulsed by a clock pulse and the output from keyboard buffer number **1** is designated as keyboard data **8.**

The keyboard buffer is formed from three stages of a bistable latch mechanism **7475.** It will be noted on the circuit that each of the inverters, gates, latches, or any of the other components that the numbers 00, 10, 75, etc. are abbreviations for the 7400 family which is listed in the chart and serves to further identify each of the integrated circuit elements. Each stage of the buffer consists of two of the **7475** type integrated circuits which accept information whenever their clock inputs are active. Control of the three buffer stages is carried out through an up-down counter circuit which is shown principally in FIG. **20***g* where three circuits are labeled loaded number **1,** loaded number **2,** and loaded number **3,** all of which are designated type 74107 dual J-K Master Slave Flip-flops. The counter circuits just described control the clock lines to the three stages of the buffer. The counter allows all these stages of the buffer to be filled with new data when their clock lines are activated as the result of receiving a keyboard strobe pulse at the counter circuits as a result of actuation of the keys on the keyboard. The third stage of the counter (number 3 loaded) is turned off until the typewriter is finished with the data. In the meantime, if additional data is received from the keyboard, the keyboard strobe passes through the control counter labeled "loaded number 1" to stage two labeled "loaded number 2" because stage three is still full or loaded. As the typewriter makes use of each code, the control counter has its code data "subtracted" causing the data to step from buffer control counter stage two into buffer control counter stage three and if data is present in buffer control counter one it will then move into buffer control counter two. This process continues until the counters are empty and until the clock pulses empty the buffers. In other words, the counter controls the buffer clock lines such as noted where the letter *A* appears in a small block in the upper left-hand corner of FIG. **20***c* and at point *C* which is shown in a small block having an output to the third buffer. Additionally, each time a key is struck, a keyboard strobe signal is added to the buffer counter and each time a solenoid pulse appears at the solenoid drivers found in FIG. **20***e*. the counter performs a subtraction function. It will also be noted that each stage of the counter has a delay circuit associated therewith to allow the code information to "ripple" through the buffers. For instance, a delay will be found existing between NOR gate **4A** and its output and the circuit which makes its way back to the clock pulse at counter number **2.** The same type of circuit is found between NOR gate **5C** at its output and the input for the clock pulse on the third stage of the buffer counter.

In the event that over three keys are struck in rapid succession, a buffer pile up circuit formed of integrated circuit type 74107 produces an output which makes its way to an error detector lamp **300.** Should the typewriter be connected to a memory device, the error signal appearing at the lamp would be sent to the memory device to stop its operation until the error was corrected.

If a character is to be repeated, the typewriter print operation is accomplished by loading the code in the buffer while inhibiting a buffer unloader integrated circuit type number 74123 which is done through the Repeat latch circuit. In this manner, the third stage of the buffer counter is never emptied and thus produces continuous Repeat signals to the keyboard buffer to produce continuous retyping of that particular character.

Turning now to FIG. **20***e*, it will be seen that the typewriter solenoids are electrically arranged in two main groups. That is, one lead of each of the "print" solenoids **1** through **7** are connected to a common print line which is connected to the emitter of transistor **Q9** so that 28 volts positive is applied to the common side of all of the solenoids when **Q9** conducts current. The other electrical terminal of solenoids **1** through **7** are all connected to one side of a Darlington amplifier which when it conducts current completes the circuit to ground. On the other hand, operational solenoids **9,** and **11** through **15** are connected through a common operational line to the output of transistor **Q7** in the manner just described for the print function. Through a circuit of this type, transistor drive circuits **Q10** through **Q15** are alternately connected for the proper print or operational function. In other words, the solenoids are gated on each end and data bits from the buffer select the proper Darlington transistor drivers which when active, provide a potential ground path to the appropriate print and operational solenoid. The other ends of the two groups of solenoids are gated to +28 volts. If +28 volts is applied to the "print" group, a printing function will occur, but if the +28 volts is applied to the operational group, the selected operational function will be accomplished. Arc suppression diodes are also coupled across each of the solenoids to protect the driver transistors and limit transients.

When the keyboard buffer and solenoid drive circuits sense a keyboard strobe signal, a signal is transferred from the third counter stage to the input of the solenoid on integrated circuit type **74123** which is a dual retriggerable monostable multi-vibrator. The solenoid "On" timer is triggered through the driver transistors, pulses the solenoids for 35 milliseconds. The time constant for the solenoid "On" integrated circuit is developed through capacitor **C20** and resistors **R61** and **R35.** To complete a printing cycle, approximately 28 to 33 milliseconds "rest" time is required in addition to the 35milliseconds "on" time. The 28 to 33 milliseconds

variation is determined by typewriter mechanical adjustments, wear, and also very slightly from one character to the next due to different tilt and rotational requirements as described earlier. In order to insure that the proper amount of rest time is counted, a rest interlock integrated circuit of type 74123 provides a time constant of approximately 40 milliseconds through resistors **R36, R34** and capacitor **C19.** During the operation of the rest timer, it inhibits further input into the buffer unloader until the typewriter printing cycle has been completed.

Some operations such as Index, Carrier Return, Tab, and Line Return require more time than the 75 milliseconds provided by the two timers just described. During the Index operation, the extra time is provided by gating another resistor into the "rest" timer RC network such as resistor **R60** to enlarge the total elapsed time to approximately 140 milliseconds. The other operational functions of Carrier Return, Tab, and Line Return are of indefinite duration and therefore are controlled through interlock switches monitoring the typewriter linkages. Carrier and Line Return interlock switch **196** and Tab interlock switch **238** are both shown mechanically coupled in FIGS. **14, 18,** and **16.** Switches **196** and **238** are wired in series-parallel manner, and are connected to a switch interlock debounce integrated circuit type 7475 in the form of a bistable latch circuit which requires that the switch movable arm is moved from one set of contacts to the other, that is they must transfer from one contact to the other before the latch circuit changes and thus any momentary closing of the swtich will not erroneously trigger the circuit. The output of the switch interlock debounce circuit is applied to the rest timer input. When the Tab, Carrier Return, or Line Return function is complete, switch **238** or switch **196** transfers and triggers the "rest" timer which provides 40 milliseconds additional time for the typewriter mechanism to complete its operational function.

When data is present in the typewriter, either from the keyboard or an outside input through the terminals found in the lower left-hand portion of FIG. **20***c*, the solenoid "On" timer is triggered and provides a 35 millisecond pulse which is gated to the "print" solenoids where the 7 bits solenoid is actuaed or the "operational" solenoids are operated where the signal is bit singalis absent. As explained earlier, certain functions require the total of 75 milliseconds for their operation and input of a Space, or Back Space signal require 35 milliseconds "On" time plus 40 milliseconds "rest" time for a total of 75 milliseconds to complete the operational function.

A "printing" operation or cycle can be completed within 75 milliseconds but the typewriter clutch would latch up every cycle causing premature clutch wear and would actually slow the typewriter operation. For this reason, and as stated earlier herein, a magnet sleeve has been added to the typewriter print shaft as shown principally in FIG. **3** and a monitoring coil **78** positioned adjacent thereto which produces a pulse near the completion of each printing cycle. The pulse is amplified through Q1 (FIG. **20***i*) and is applied to the "clear" input terminal of the "rest" timer and cancels the output of the timer when the typewriter is ready for another print or operational function.

Also associated with the cycle timing coil **78,** is zone switch **255.** Once switch **255** is closed, an electrical ground is applied in the line leading to the zone latch circuit and upon a character being printed another signal is applied to the zone latch circuit which causes the bell solenoid to be energized and thus cause the bell to be rung. When the typewriter is used with a memory system, a counter counts a predetermined number of spaces at which time the input to the 7404 type inverter is electrically grounded, the action simulated in FIG. **20f** through the use of a "Remote" switch, which in turn disengages the electronic keyboard. Upon depressing the Margin Release key, Carrier Return key, or Line Return key, a signal is applied to the input of one section of the zone latch integrated circuit to reset the latch circuit.

FIG. **20***j* also discloses the Shift interlock switch **172** and thus a signal is applied to one of two sections of a Shift comparator formed of integrated circuit type No. 7451 which is an AND-OR-INVERT gate which supplies an output signal to a Shift latch which is connected to a Shift driver on FIG. **20***e*. The Shift interlock switch goes through a debouncing circuit such as described previously and prevents an input to the print or operational circuits while shifting and provides a feedback signal from the Switch to the logic circuits indicating the immediate state of the typewriter Shift mechanism. If the data bit **8** indicates either a Shift or non-Shift and the Shift interlock latch circuit do not agree, the "On" timer is inhibited, and when the Shift interlock latch circuit and the data bit **8** do agree, the "On" timer is released and printing continues.

When it is desirable to lock the Shift mechanism, the LOCK key is depressed which actuates an OR gate forming part of the Shift latch circuit, which latches the circuit to continue the Shift data signal. The LOCK function is released upon closing the Shift key and switch momentarily to unlatch the shift latch circuit.

It is also necessary when the power is first applied to the typewriter that a "clear" or "reset" signal be applied to the appropriate gates and latches to restore them to their original or at rest position and this is accomplished through the circuit appearing in the lower left-hand corner of FIG. **20***f* in which the signal is applied to terminal L shown in the square block which is also applied to a like terminal in FIG. **20***i* which in turn finds its way to clear each of the appropriate circuits and is also applied to FIG. **20***a* to clear the Shift latch and buffer.

FIG. **20***j* also discloses a source of power of 110 volts alternating current which is supplied to a power supply **306** through a power switch **305.** The outputs of the power supply are connected to the various points so indicated in the circuit schematic and has terminals supplying + 28 volts dc, + 28 volts common, + 5 volts dc, + 2.7 volts dc and electrical ground.

It has been seen that through the use of the diode matrix driving a multi-stage buffer that the mechanical mechanisms ordinarily used with a single print head typewriter may be eliminated and thus provide a machine which is more reliable, and which operates in a faster manner. It has been shown that through the use of a buffer, an operator may get ahead of the printer for several characters but the typewriter will still follow the proper sequence of characters to be printed. It has also been demonstrated that through the proper use of latching or pulling certain escapements of bail latches, the carrier of the typewriter may be returned without creating an indexing function which is highly desirable for certain modes of operation.

It will, of course, be understood that various changes may be made in the form, details, arrangement and proportions of the parts without departing from the scope of the invention which consists of the matter shown and described herein and set forth in the appended claims.

What is claimed is:

1. A typewriter having an operating mechanism and a printing mechanism using a single element print head operable to present one character at a time to a printing position and print the same where the character is determined by tilt and rotational movement in response to distinct typewriter keyboard characters and operations, said typewriter operating and printing mechanism comprising:

a. electrical matrix means having components interconnected to be representative of said distinct typewriter keyboard characters and operations, and producing output signals representative thereof;

b. switch means including electrical power means electrically connected to said electrical matrix means and disposed in a typewriter keyboard pattern representative of the distinct typewriter characters and operations;

c. keyboard buffer means having its input excited by said electrical matrix means for storing and releasing said signals representative of said keyboard characters and operations, said buffer means having a high speed input and a slow speed output characteristic;

d. solenoid drive means operatively interconnected to said keyboard buffer means, said solenoid drive means being actuated in accordance with the characters and operations of the typewriter selected by an operator;

e. buffer control means electrically interconnected to said electrical matrix means and said keyboard buffer means and controlling the flow of signals to said solenoid driver means;

f. first timing means interconnected with said buffer control means and said solenoid drive means for inhibiting said keyboard buffer means while said solenoid drive means is energized;

g. second timing means interconnected with said buffer control means and said keyboard buffer means for inhibiting said keyboard buffer means during a predetermined rest period;

h. and printing cycle timing means operably interconnected to said printing mechanism and said second timing means providing a signal cutting off the operation of said second timing means prior to the end of said predetermined rest period.

2. The structure as set forth in claim **1** including:

a first circuit board having said electrical matrix and said plurality of switches disposed in said keyboard pattern connected thereto, said first circuit board being hinged to said typewriter to swing between its normal position and another position for servicing.

3. The structure as set forth in claim **2** including:

a second circuit board having said keyboard buffer, said buffer control and said plurality of solenoid driver circuits connected thereto, said second circuit board disposed beneath said first circuit board when in its normal position and both circuit boards being exposed in said position for servicing.

4. The structure as set forth in claim **1** including:

f. buffer pile-up means electrically interconnected to said buffer control means and said electrical matrix means and generating a signal when said buffer control means blocks entry of an incoming signal.

5. The structure as set forth in claim **1** wherein said electrical matrix means includes:

a first plurality of electrical interconnected to represent a first motion of said single element print head;

and a second plurality of electrical components interconnected to represent a second motion of said single element print head.

6. The structure as set forth in claim **5** wherein said electrical matrix means includes:

an additional electrical component interconnected with said first and second plurality of electrical components to represent an operational function of said typewriter.

7. The structure as set forth in claim **1** wherein said keyboard buffer means includes:

at least three successive stages, each of which receives and passes to the next stage, said signals representative of said keyboard characters and operations.

8. In a typewriter having an operational drive mechanism including a carriage member and a printing drive mechanism using a single element print head movable with the carriage member and operable to present one character at a time to a printing position and print the same where the character is determined by movement about two axes, means for actuating said mechanisms comprising:

a. electrical matrix means, having components interconnected to be representative of distinct typewriter keyboard operations, and producing output signals representative thereof;

b. switch means including electrical power means electrically connected to said electrical matrix means and disposed in a typewriter keyboard pattern representative of the distinct typewriter operations;

c. keyboard buffer means having its input excited by said electrical matrix means for storing and releasing said signals and said electrical matrix means;

d. signal discriminator means interconnected to said electrical matrix means and said keyboard buffer means providing a clock pulse for admitting data into said keyboard buffer means;

e. solenoid drive means operatively connected to said keyboard buffer means, said solenoid drive means being actuated in accordance with the operational function of the typewriter selected by an operator;

f. clutch means interconnected between the operational drive and printing drive mechanisms and said solenoid means, said clutch means causing printing or operational functions to be performed;

g. carriage means operably connected to said clutch means carrying said single element print head and being movable from an initial position to a final position for each line of characters to be printed;

h. line return means coupled between said clutch means and said solenoid means whereby said carriage means is returned to its initial position upon selection of a distinct typewriter operational function;

i. bail means connected to said clutch means and being movable from a first position to a second position;

j. first and second input means coupled between said solenoid and bail means at first and second points respectively and being movable singly into engage-

ment with said bail means in response to operation of said solenoid means;

k. index means connected to said bail means and being responsive thereto upon said bail means being moved from said first position to said second position;

l. and latch means operably connected between said line return means and said bail means upon movement of said second input means whereby said carriage means and said index means are actuated.

9. The structure as set forth in claim **8** including:

m. interlock switch means interconnected between said line return input means and said keyboard buffer means for inhibiting said buffer means while said carriage means is returning to its initial position.

10. The structure as set forth in claim **8** including:

i. interlock switch means interconnected between said line return input means and said keyboard buffer means for inhibiting said buffer means while said carriage means is returning to its initial position.

11. The structure as set forth in claim **8** including:

n. tab interlock switch means interconnected between said keyboard buffer means and said carriage means for inhibiting said buffer means while said carriage means is moving to a new position during a tab operational function.

12. The structure as set forth in claim **8** including:

margin set means having left and right hand margin stops constructed and arranged to follow the margin rack of the typewriter and being engagable by said carriage means when said carriage means is moving left and right;

q. latch means connected to said margin set means for actuation when said left hand margin stop is engaged by said carriage means moving to the left;

t. and interlock switch means interconnected between said keyboard buffer means and said latch means for inhibiting said buffer means while said carriage means is moving.

13. The structure as set forth in claim **12** including:

zone switch means interconnected between said keyboard buffer means and said margin set means whereby said switch is actuated upon said carriage means encountering said right hand margin stop.

14. In a typewriter having an operational drive mechanism including a carriage member and a printing drive mechanism using a single element print head movable with the carriage member and operable to present one character at a time to a printing position and print the same where the character is determined by tilt and rotational movement, electrical means for actuating said mechanisms comprising:

a. an electrical matrix having components interconnected in a manner representative of distinct typewriter keyboard characters and functional operations and producing output date signals representative of the same;

b. a plurality of switches interconnected to said electrical matrix and disposed in a typewriter keyboard pattern representative of said keyboard characters and operations;

c. a keyboard buffer having first, second, and third stages connected in serial relationship for storing and releasing said signals representative of said keyboard characters and operations and having its input excited by said electrical matrix;

d. a buffer control circuit having first, second, and third stages connected in serial relationship, each of said stages being interconnected with a corresponding stage of said keyboard buffer for controlling the movement of said data through said keyboard buffer;

e. a strobe pulse generator connected to, and excited by, said electrical matrix upon closing each of said predetermined number of said plurality of switches, the output of said strobe generator being connected to said first stage of said buffer control circuit to initiate action of said control circuits;

f. a plurality of solenoid driver circuits connected to the third stage of said keyboard buffer;

g. a plurality of solenoids individually connected to said plurality of solenoid driver circuits, each solenoid of said plurality being actuated in accordance with the characters and operational functions of the typewriter as selected by an operator;

h. a first timer connected to said buffer control circuit to initiate a printing operation and producing a signal of a predetermined time duration;

i. a second timer having its input connected to the output of said first timer and responsive to said signal produced by said first timer, said second timer producing a second signal of predetermined time duration;

j. a time delay circuit interconnected to said second timer and said first timer, said time delay circuit being responsive to signals from said second timer and actuating said first timer to inhibit a printing operation;

k. and a buffer unloader circuit connected between said first timer and said third stage of said keyboard buffer.

15. The structure as set forth in claim **14** including:

m. a printing cycle timer connected to the printing drive mechanism producing a signal representative of the end of the print cycle, said printing cycle timer being connected to said second timer and inhibiting its operation when said print cycle time is less than the total time of said first and second timers.

16. The structure as set forth in claim **14** including:

a carriage shift circuit actuated by one of said plurality of switches producing an output signal and being connected to said keyboard buffer for initiating one of said plurality of solenoids controlling the typewriter shift mechanism;

and a shift interlock switch mechanically connected to the said typewriter shift mechanism for determining the status of said carriage and electrically connected to said first timer to inhibit the same when said shift mechanism is actuated.

17. The structure as set forth in claim **16** including:

a carriage shift lock circuit actuated by a distinct one of said plurality of switches and being connected to said shift circuit and said keyboard buffer including an electrical latch circuit causing said shift said circuit to continuously produce said output signal until said switch actuating said shift circuit is again actuated.

18. The structure as set forth in claim **14** including:

a solenoid control circuit interconnected between said keyboard buffer and said plurality of solenoid driver circuits controlling said plurality of solenoids so that upon energizing either the printing solenoids or the operational solenoids, the others are

disabled.

* * * * *