Dec. 3, 1929. F. L. O. WADSWORTH 1,738,088

WATER HEATER

Filed May 19, 1923 2 Sheets-Sheet 1

Fig. 1.

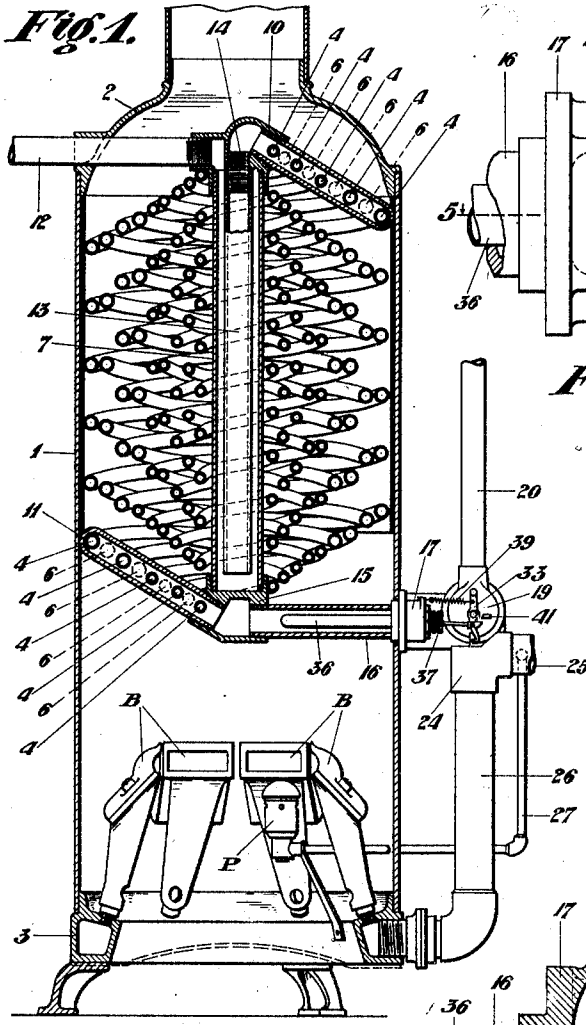

Fig. 3.

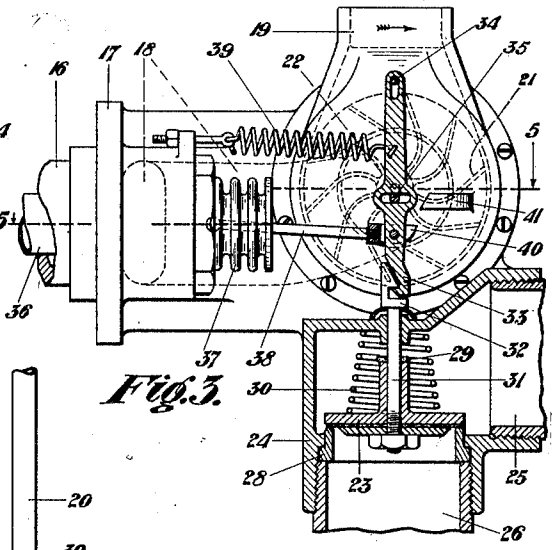

Fig. 4.

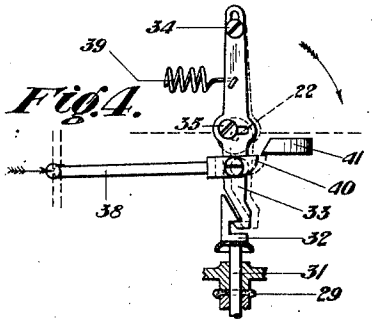

Fig. 2.

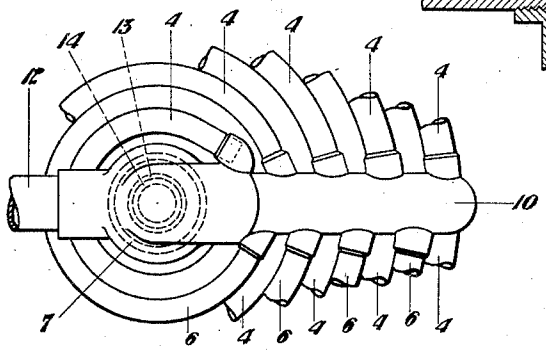

Fig. 5

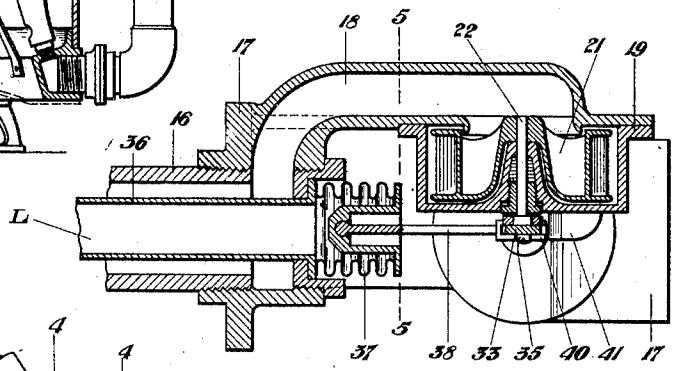

Inventor:

F. L. O. Wadsworth

Dec. 3, 1929. F. L. O. WADSWORTH 1,738,088

WATER HEATER

Filed May 19, 1923 2 Sheets-Sheet 2

Fig. 6.

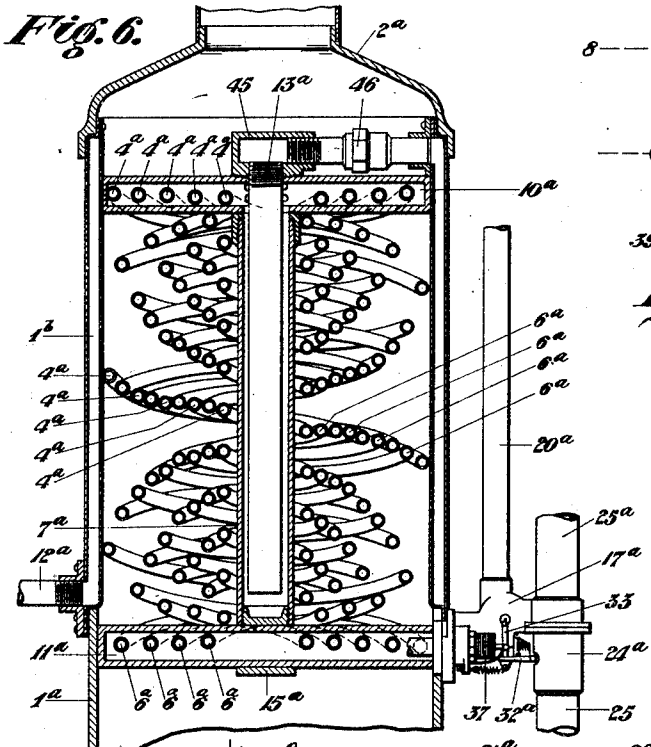

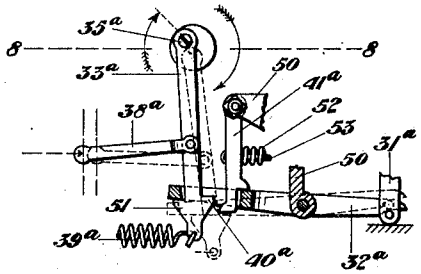

Fig. 10.

Fig. 9.

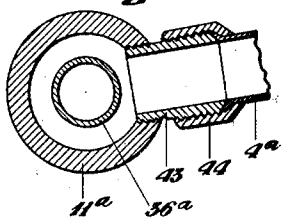

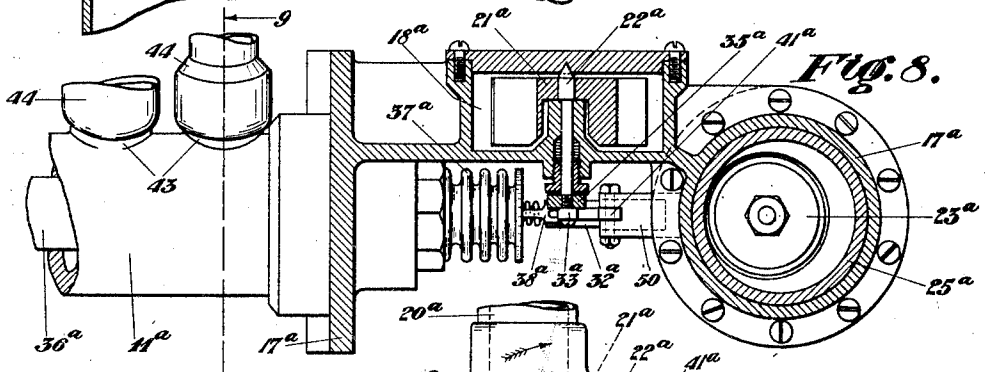

Fig. 8.

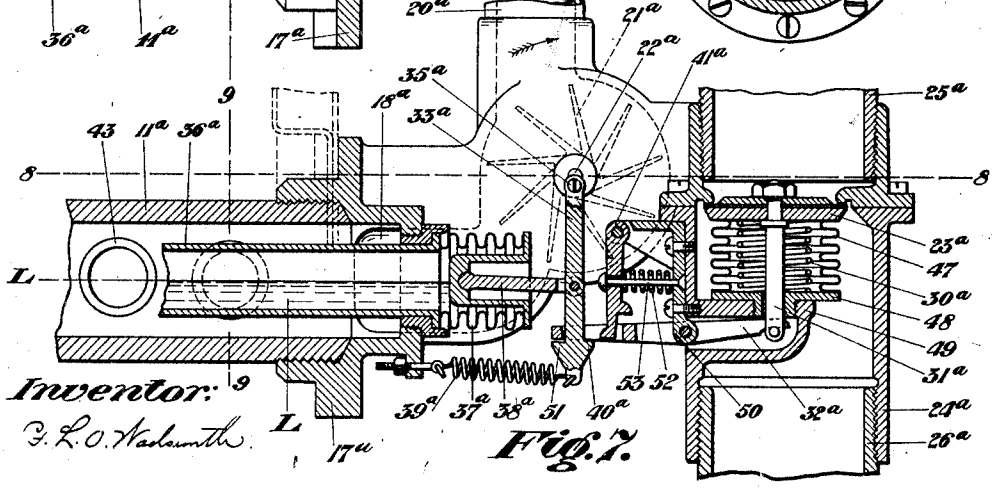

Fig. 7.

Inventor:

F. L. O. Wadsworth.

Patented Dec. 3, 1929 1,738,088

UNITED STATES PATENT OFFICE

FRANK L. O. WADSWORTH, OF PITTSBURGH, PENNSYLVANIA

WATER HEATER

Application filed May 19, 1923. Serial No. 640,078.

My invention relates to one of the types of automatically controlled water heaters, which is generically described in my copending application Ser. No. 637,037, filed May 7th, 1923; and the present application may be considered as a continuation, in many respects, of the earlier one.

More specifically stated this invention relates to a water heater construction in which the supply of heat to the liquid is automatically controlled by the action of a turbine, or some equivalent form of rotary motor element, whose movements are governed in part by the flow of liquid through the heater and in part by the changes in temperature in the said liquid; and one of the primary objects of these improvements is to provide a construction of the above specified character which is very simple and compact in form, is reliable and certain in its action, and which can be operated at low cost.

Other specific objects and advantages of my present invention will be made apparent, to those skilled in this art, by an examination of the structures which are hereinafter described as exemplary or illustrative embodiments thereof. In the drawings, which form a part of this disclosure, Fig. 1 is a sectional elevation of one form of my improved heater construction; Fig. 2 is an enlarged plan view of a portion of the heater coils; Fig. 3 is a side view, on a still larger scale—and partially in section—of the automatic control mechanism of this organization; Fig. 4 is another view of a part of this mechanism; Fig. 5 is a section on the broken plane 5—5 of Fig. 3; Fig. 6 is a partial sectional elevation of a second exemplification of these improvements; Fig. 7 is another sectional elevation, on a larger scale, of the valve control mechanism shown in Fig. 6; Fig. 8 is a horizontal section on the plane 8—8 of Fig. 7; Fig. 9 is a detail section on the plane 9—9 of Figs. 7 and 8; and Fig. 10 is a detail view of a portion of the mechanism shown in Figs. 6 and 7, but with the parts thereof in a different phase relationship.

In the form of construction illustrated in Figs. 1 to 5 the heater shell consists of a single sheet metal cylinder 1, which is provided at the top with a cap 2, that carries the chimney flue, and which is supported on a hollow base ring 3 that carries a circle of heating burners B. These burners may be of any approved construction—such, for example, as are described in the Ruud Patent No. 875,218 of Dec. 31st, 1907—and, as here shown, are arranged with their axes inclined inwardly so as to direct the hot gases of combustion toward the central axis of the heater shell. The heat absorbing member of the organization comprises two sets of helical coils 4, 4, 4, 4, 4, and 6, 6, 6, 6, which are wound in opposite directions around a central reservoir 7, and are coupled, in parallel, to the opposite sides of reversely turned manifolds or headers 10 and 11. The central reservoir 7 is connected, at its upper end, to a cold water inlet pipe 12; and is provided with a centrally disposed return tube 13, that is open at the bottom, and is connected at the top, by an internal nipple 14, with the inner end of the upper manifold 10. The lower manifold 11 is supported on—or is formed as an integral part of—the cap 15 that closes the lower end of the reservoir 7; and it is connected, by the pipe 16, with a flanged member 17 which is bolted to the side of the shell 1 and which contains the automatic control mechanism for regulating the flow of fuel to the heating burners B. The member 17 is provided with a passage way 18 which leads from the end of the pipe 16 to a center of a cylindrical casing 19 that is bolted against the front face of this member; and the casing 19 is provided at its top with a threaded boss to receive the house service pipe 21.

When a tap in the service pipe 20 is opened the water flows from the inlet conduit 12 to the top of the central reservoir 7; passes down to the bottom of this reservoir, and thence upwardly, through the return tube 13 and nipple 14, to the upper header 10; then flows in multiple streams through the reversely wound coils 4—6 etc. to the lower header 11, from which it is discharged, through the passage and chambers, 16—18—19, into the said service pipe. The number of turns in the successive helical coils—and the resultant lengths of the multiple spiral passage ways between

the two manifolds 10 and 11—are preferably so proportioned as to present a substantially constant or uniform relationship between the heat absorbing capacity of each coil and the volume of liquid which flows therethrough. The heat absorption of any particular conduit is proportional to the mean difference between the temperature of the heating and the heated mediums (viz, the gases of combustion surrounding the conduit and the liquid within it) and to the area of the heating surface—(i. e., to the length and diameter of the conduit)—and the quantity of liquid flowing through it is inversely proportional to the square root of the length and directly proportional to the diameter raised to the five halves power. In the case of a spiral coil the length of the conduit is roughly, although not exactly, proportional to the mean radius of the winding multiplied by the number of turns; and if we know the temperature gradient from the center to the exterior of the heating chamber, (as a function of the radial distance from the center), we can readily determine the number of turns which each coil must have in order to maintain the desired constancy of relationship between its heat absorbing and its flow conducting capacities. In the particular construction shown in Fig. 1—where the heat is concentrated on the inner coils of the system—the mean temperature difference between the heating gases and the flowing water may be considered as inversely proportional to the square root of the radius of each coil. The radius of the outermost coil is approximately four times as great as that of the innermost coil (the effective temperature differences being therefore in the ratio of one-half to one); and if the internal diameter of the pipe used was the same in each case, the number of turns in the inner helix should be approximately two and one-half times the number of turns in the outer helix. But if the diameter of the pipe used in the outer helix is larger than that used in the inner helix this ratio may be diminished; and in the illustrative embodiment of my invention now being described—in which the outer coil is made of pipe that is approximately 33% larger in internal diameter—the number of full turns in the inner helix is only twice as great as the corresponding number of turns in the outermost coil. The ratio is, of course, varied—as will be shown later—to best meet other conditions as to temperature variations in different parts of the heating chamber, or other alterations in the internal diameters, the wall thicknesses, or the material of the pipes that are employed in making up the various heating coils; and the present exemplification of this feature of my improvements is, therefore, to be regarded as only illustrative of the generic type of equalized coil construction hereinbefore explained.

The automatic control mechanism shown in Fig. 1—and in greater detail in Figs. 3, 4 and 5—comprises a turbine wheel 21, which is rotatably supported on a shaft 22 that passes through the closed end of the casing 19; a valve 23 which is mounted in a chamber 24 (formed in the lower part of the member 17) between the fuel supply pipe 25 and the conduit 26 that leads to the interior of the ring 3 and the burners B; and a system of intermittently acting connections which conjoin the said valve with the turbine shaft 22 and with a thermostat member L, that is interposed in the path of the water flowing to the said turbine; and which act cooperatively to either instantaneously admit, or instantaneously cut off, the supply of fuel to the heating burners, B, whenever the flow of water is started or stopped; or correspondingly act, but in the reverse order, whenever the temperature of the flowing water rises above or falls below the desired point of temperature regulation. The fuel which is thus admitted intermittently to the main burners B is there ignited by a constantly burning pilot light P, which is supplied with gas through the by-pass connection 27.

In the specific form of construction illustrated in Figs. 3, 4 and 5 the fuel control valve 23 is seated on a ring 28 that is held in place in the chamber 24 by the end of the conduit pipe 26; and it is provided with a central hub which carries a semi-elastic packing washer 29 that serves to limit the upward or opening movement thereof. This valve is normally held closed by a spring 30 that is interposed between its upper face and the upper wall of the chamber 24. The valve stem 31 projects upwardly through this upper wall, and is provided, at its top, with a hook shaped head 32, which is adapted to engage with the correspondingly shaped extremity of a reciprocable rod 33, that is guided and held in position, at its upper end, by the pin and slot connection 34, and is actuated by a crank pin 35 on the end of the shaft 22. The temperature actuated element L consists of a rigid tube 36, and a flexible sylphon bellows 37 connected to the outer end of this tube—these connected parts being hermetically sealed and partially filled with a volatile liquid—and the free end of the sylphon element is pivotally coupled to the intermediate part of the rod 33 by means of a rigid bar 38. The expansion of the thermostat is resisted by an adjustable tension spring 39, which is also attached to the rod 33, and which serves to normally hold the lower hook shaped extremity thereof in engagement with the valve stem head 32; and the outer forked end of the bar 38 is provided with projecting ears 40, that are adapted to be engaged, at other times, by the lug 41 on the face of the casing 19.

The operation of this interconnected water-

flow-temperature-controlled device is as follows: When no water is flowing through the casing 19 the parts are held in the position shown in Fig. 3 by the tension of the valve spring 30. As soon as the flow is started the turbine wheel is rotated in a clockwise direction, and the interengaged rod and valve stem elements 31, 32 and 33, are lifted, by the action of the crank pin 35, until the packing washer 29, is brought into contact with the top of the valve chamber 24 (as shown in Fig. 4). This contact arrests the movement of parts before the shaft 22, and the crank pin 35, have completed a full half revolution; and the valve 23 is held in its fully opened position—against the tension of the spring 30—by the velocity pressure of the flowing liquid on the radially inclined vanes of the turbine 1. When the flow is stopped this velocity pressure disappears and the wheel 21 is then free to rotate backward,—or in a counterclockwise direction—and permit the valve to be "snapped" shut by the unopposed pressure of the spring 30. If the discharge of liquid continues for a sufficiently long interval, the water flowing through the heater coils may be raised above the desired temperature—by an oversupply of fuel through the fully opened valve 23—and in such event the resultant vapor pressure in the thermostat, L, will overcome the preadjusted tension of the spring 39, and will push the hook shaped end of the rod 33 out of engagement with the valve stem head 32—as indicated in dotted lines in Fig. 4—thereby allowing the valve 23 to be instantaneously closed by its spring 30. This expansion movement will carry the ears 40 of the bar 38 under the stationary lug 41; and will thus prevent any further motion of the parts until the following drop in temperature—due to the cutting off of the fuel supply—permits the spring 39 to withdraw the elements 40—41 from engagement with each other. If this occurs while the water still continues to flow, the turbine 21 will be again revolved; the connecting rod 33 will be carried up and past its dead center position and then down until its lower end is engaged with the head 32; and the reengaged parts 31, 32 and 33 will be once more raised to the full line position of Fig. 4; thereby admitting a fresh supply of fuel to the heating burners and completing one full cycle of temperature control action.

In the second illustrative embodiment of my present improvements (Figs. 6 to 10 inclusive), the shell of the heater is constructed in two sections 1^a and 1^b, the lower of which contains the heating burners (not here shown), and the upper of which supports two sets of reversely wound coils, 4^a, 4^a, etc., 6^a, 6^a, etc., that constitute the main heating unit of the structure. These coils are coaxially disposed about a central tube 7^a; and the ends thereof are alternately coupled to the opposite sides of transverse manifolds or headers 10^a and 11^a, either by brazing or welding, or by means of the special nipple and union connections 43—44 (as shown in detail in Figs. 8 and 9) or in any other suitable manner. The upper manifold 10^a is connected to the top of the central tube 7^a, by means of a special **T** shaped head 45; and the lower manifold 11^a is supported on a cap 15^a that closes the bottom of this tube. The upper section 1^b of the heater shell is made in the form of a thin annular reservoir which is provided at its lower end with a cold water inlet 12^a, and which is connected, at its opposite end, with an upper compartment in the head 45, by means of the nipple and union fittings 46. A pipe 13^a extends from the upper chamber of the head 45 to a point near the bottom of the tube 7^a, and any water which enters the inlet 12^a is thus conducted through the reservoir 1^b, and the connections and passages 46—45 and 13^a to the bottom of the central chamber 7^a; from which it passes upwardly into the header 10^a, and then downwardly, through the multiple conduits 4^a, 6^a etc., to the lower header 11^a. In this exemplification of my improvements the several conduits are all of the same internal diameter; and the number of turns in each coil is roughly proportional to the means radius of the helical winding;—this arrangement being the one which is adapted to maintain a substantially constant ratio between the heat absorbing capacities and the liquid carrying capacities of the successive coils when the burners in the base of the heater are so arranged as to secure an approximately uniform temperature over any horizontal plane through the heating chamber. But if the outer coils are made of larger pipe—as in the previously described construction—the number of turns therein may be correspondingly increased; and the relative lengths and internal diameters of the various spiral conduits may be otherwise varied (in the manner heretofore explained) so as to obtain, in any given case, the most equitable and effective action of the complete heating unit.

The open end of the lower manifold 11^a is coupled to a flanged casing 17^a which is secured to the side of the heater shell and which is connected, in turn, to the lower end of a service pipe 20^a. This casing contains a water wheel 21^a, which is rotatably mounted, on a shaft 22^a, in an enlargement of the passage way 18^a that leads from the manifold 11^a to the service pipe 20^a; and the adjacent portion of the casing is threaded, on one side, to carry the fuel supply pipe 25^a, and faced off, on the opposite side, to receive the valve box 24^a, that is connected, in turn, to the burner conduit 26^a. The box 24^a contains a valve 23^a, which is carried on the upper end of a sylphon bellows 47; and the latter is at-

tached, at its opposite extremity, to a head 48 which is threaded into a hollow boss 49 that projects from one side of the said box. The valve is normally held against its seat, in the casing 17ª, by means of a coil spring 30ª, which is interposed between the valve and the head 48; and it is provided with a stem 31ª that projects downwardly through the said head into the interior of the hollow boss 49.

The valve and valve stem 23ª—31ª, are detachably connected to the shaft 22ª, of the water wheel 21ª, by means of the crank disc and pin 35ª, the connecting rod 33ª and the U shaped lever 32ª which is pivoted near its center on a bracket 50 that is attached to one side of the valve box 24ª. The manifold 11ª contains the tubular cell element 36ª of a vapor thermostat L; and the expansible sylphon terminal 37ª of this thermostat is flexibly coupled, by means of a bar 38ª, with the intermediate part of the connecting rod 33ª. The lower end of this rod is attached to an adjustable tension spring 39ª—which serves to resist the expansion of the thermostat element 37ª and hold the parts in the position shown in Figs. 7 and 10—and it is also provided with two oppositely turned lugs 51 and 40ª, the first of which is adapted to engage with the adjacent closed end of the U shaped lever 32ª, (when the parts are in the full line positions of Figs. 7 and 10), and the second of which is so arranged as to be engaged, at other times, with the depending end of a latch bar 41ª that is supported on the bracket 50, and is normally held in the position shown (in the said figures) by the compression spring 52 and the stop bolt 53.

The automatic control action of this last described mechanism is generically identical with that of the previously considered structure shown in Figs. 3 to 5. When no water is flowing through the heater—and the temperature of the liquid in the manifold 11ª is below the point of automatic cut off—the valve 23ª will be maintained in its closed position by the spring 30ª; and the connecting rod 33ª will be correspondingly held down by the engagement between the outer end of the valve lever 32ª and the lug 51. When a tap in the house service pipe 20ª is opened the resultant flow of water through the passage way 18ª will rotate the wheel 21ª, in the direction of the arrow of Figs. 7 and 10, and will lift the connecting rod 33ª—thereby rocking the lever 32ª in a clockwise direction and opening the valve 23ª—until this movement is stopped, either by the engagement of the lower end of the valve stem 31ª with the bottom of the pocket in the boss 49, or by the contact between a suitable part of the lever 32ª and a lug on the side of the latch 41ª. The parts will be held in this position (as shown in Fig. 10), against the tension of the spring 30ª, by the kinetic or velocity pressure of the flowing water on the blades of the wheel 21ª and the engagement of the parts 35ª—33ª—51—32ª—31ª, unless the temperature of this flowing liquid is raised above the predetermined point of thermal control action. But when this occurs the expansion of the thermostat will move the connected elements 38ª—33ª a sufficient distance to the right to disengage the lug 51 from the end of the valve lever 32ª; and the valve will then be immediately "snapped" shut by the spring 30ª. This disengagement of the parts 51—32ª will also permit the wheel 21ª to be again moved by the flowing water; and the connecting rod 33ª will be first carried upward and over the dead center position, and then moved downward until the lug 40ª passes under and engages with the end of the latch 41ª,—as shown in the dotted line position of Fig. 10. The rotation of the wheel 21ª is thus again arrested until the drop in temperature in the flowing water, and the resultant contraction of the thermostat, permits the spring 39ª to disengage the lug 40ª from the latch 41ª (during which movement the lug 51 is again carried under the end of the lever 32ª); after which the water actuated member will be moved forward another step to once more fully open the valve in the manner first described. These successive release and reopening movements will continue as the temperature of the flowing water alternately rises above and then falls below the predetermined point of cut off—which can be varied by adjusting the tension of the spring 39ª—and when the flow of water is stopped the pressure on the opposite sides of the wheel 21ª will be at once equalized, and this rotating member may then be revolved backward, and the valve 23ª, if open, may be immediately closed, by the action of the spring 30ª.

It will now be apparent to those skilled in the art to which this invention appertains that the hereinbefore described improvements present several definite and characteristic features of construction and operation which may be embodied in many different mechanical forms of structure; and, with the preceding disclosure as a guide, engineers, and others familiar with the design, manufacture and use of the several conventional types of water heaters now employed for different purposes, will be enabled to advantageously utilize these improvements in connection with various organizations which are generically analogous to, but which may be specifically different from, those herein shown. The specific exemplifications previously described, are therefore to be considered as only illustrative applications of my invention, and are not to be regarded as delimiting its scope of usefulness.

What I claim in connection therewith is the following:

1. In a construction of the character described the combination of a receptacle, a

valve for controlling the supply of heat thereto, a rotary motor actuated by the flow of fluid therein, means connecting the said motor with the said valve and acting to open the latter when the said fluid is below a predetermined temperature, and other means for disconnecting the said motor and valve elements when the said fluid is heated above the aforesaid temperature.

2. In a construction of the character described the combination with a receptacle, of means for controlling the supply of heat thereto which comprises, a rotary motor actuated by the flow of fluid through the said receptacle, a thermostat exposed to the heated fluid, and connections between the said thermostat and the said motor for controlling the rotary movement thereof at predetermined temperatures.

3. In a construction of the character described the combination of a receptacle, a valve for controlling the supply of heat thereto, means for normally holding the said valve closed, a rotary motor actuated by the flow of fluid through the said receptacle, means connecting the said motor with the said valve and acting to open the latter when the flowing fluid is below a predetermined temperature, a thermostat, and means actuated by the said thermostat to disconnect the said valve from the said motor when the fluid in the said receptacle is raised above the said predetermined temperature.

4. In a construction of the character described the combination of a heating coil, a valve controlling the supply of heat thereto, a turbine actuated by the flow of fluid therethrough, a crank pin and connecting rod conjoining the said turbine with the said valve and acting to open the latter when the flowing fluid is below a predetermined temperature, means for locking the turbine against rotation before the said crank pin has reached its dead center position on the opening movement, and other means for disconnecting the said valve from the said turbine when the said predetermined temperature has been exceeded.

5. In a water heater the combination of a heating coil, a valve controlling the supply of heat thereto, a rotor member actuated by the flow of water therethrough, a reciprocating connection conjoining the said rotor with the said valve and acting to open the latter when the flowing water is below a predetermined temperature, a stop for arresting the motion of the rotor before it has completed a half revolution on the opening movement, a thermostat, and means conjoining the said thermostat with the said reciprocating connection, and acting to disengage the latter from the said valve when the water has been heated above the aforesaid temperature.

6. In a water heater the combination of a heating coil, a valve controlling the heat supply thereto, a turbine positioned in the path of water flow therethrough, a reciprocatory connection between the said turbine and the said valve, a thermostat, means conjoining the said thermostat with the said reciprocatory connection and acting to disengage the latter from the said valve when the thermostat is heated above a predetermined temperature, and other means for automatically closing the said valve when so disengaged from the said turbine.

7. In a water heater the combination of a receptacle, a motor actuated by the flow of water therethrough, a valve, means for engaging the said motor with the said valve and opening the latter when the flowing water is below a predetermined temperature, other means for disengaging the said valve from the said motor when the said temperature has been exceeded, and additional means for closing the said valve when thus disengaged, substantially as described.

In testimony whereof I have hereunto set my hand.

FRANK L. O. WADSWORTH.