Feb. 2, 1965 L. COES, JR., ETAL 3,167,891

GRINDING MACHINE

Original Filed Jan. 3, 1962 5 Sheets-Sheet 1

Fig.1

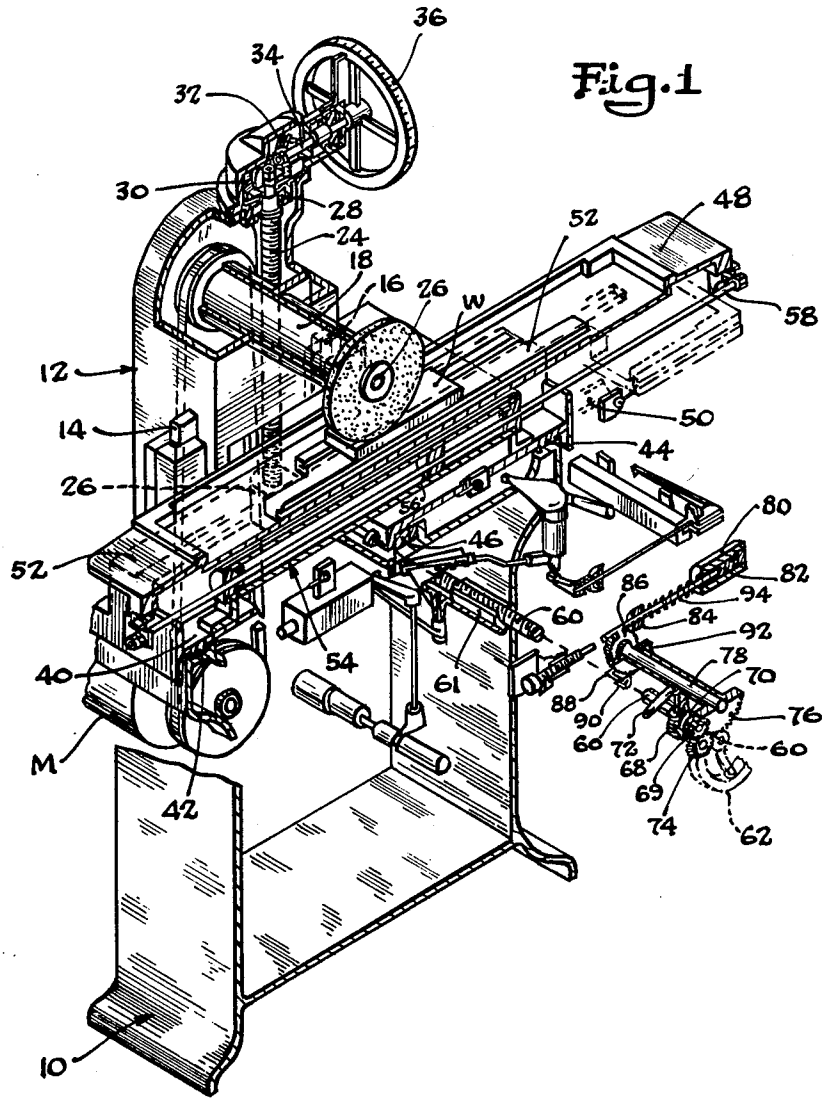

INVENTORS.
LORING COES JR.
EMMANUEL MILIAS
BY
ATTORNEY

GRINDING MACHINE

Original Filed Jan. 3, 1962 5 Sheets-Sheet 2

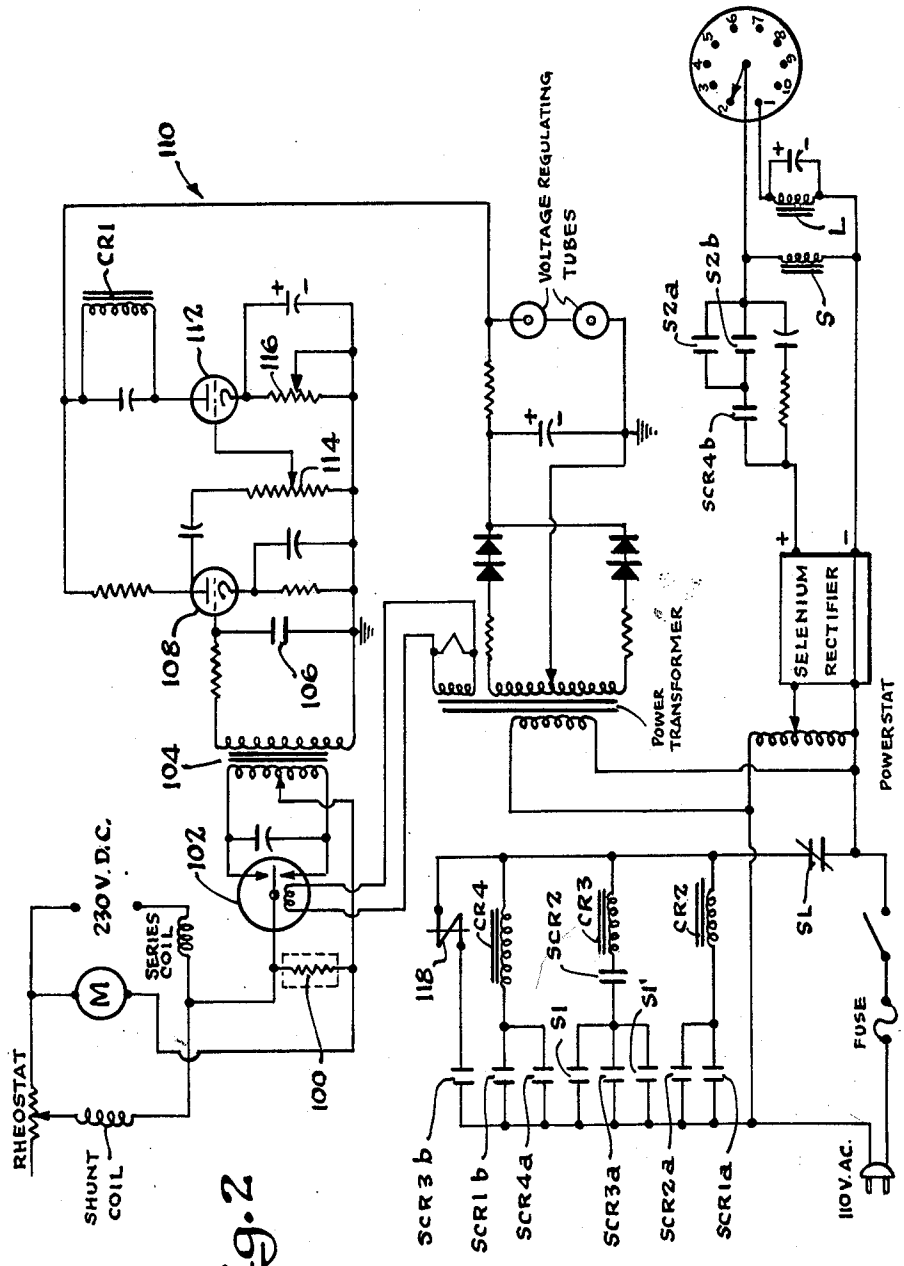

Fig. 2

INVENTORS.
LORING COES JR
EMMANUEL MILIAS
BY
ATTORNEY

Feb. 2, 1965 L. COES, JR., ETAL 3,167,891

GRINDING MACHINE

Original Filed Jan. 3, 1962 5 Sheets-Sheet 3

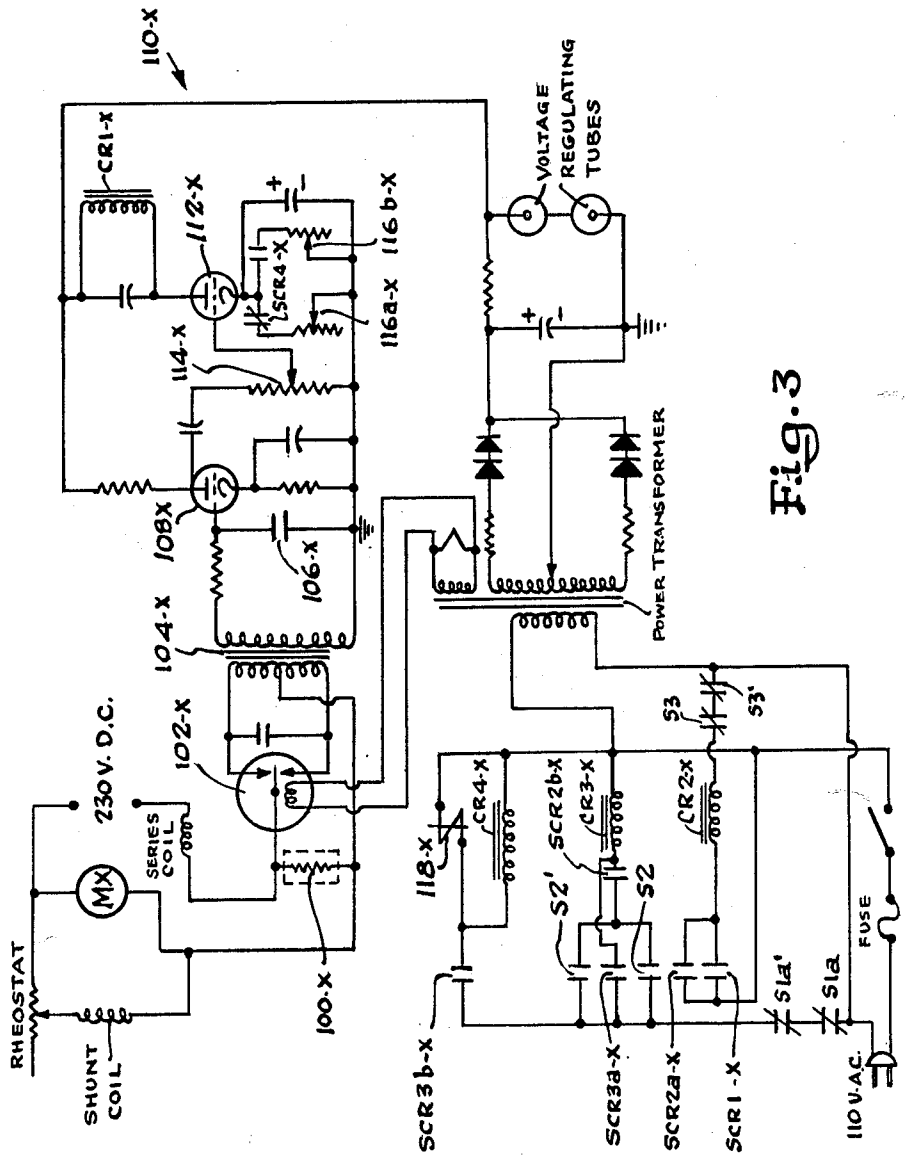

Fig. 3

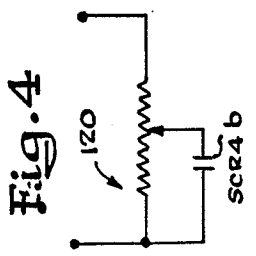

Fig. 4

INVENTORS.
LORING COES JR
EMMANUEL MILIAS
BY
ATTORNEY

Fig.5

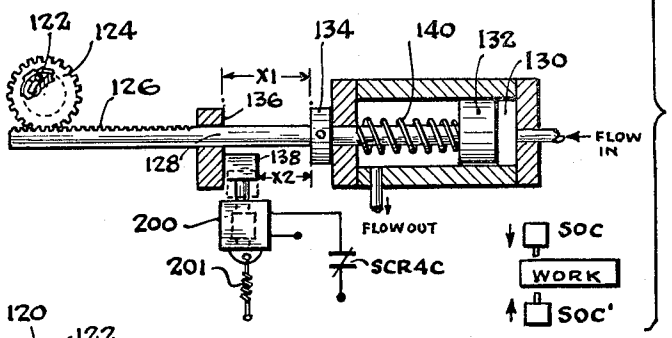

Fig.5A

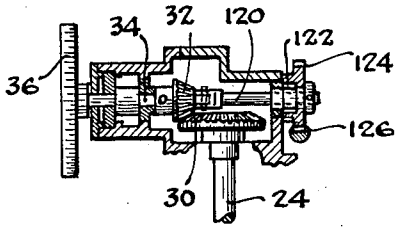

Fig.6

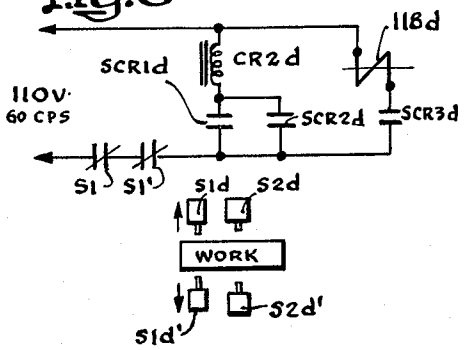

Fig.7

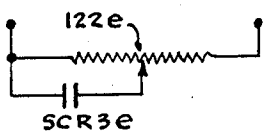

Fig.8

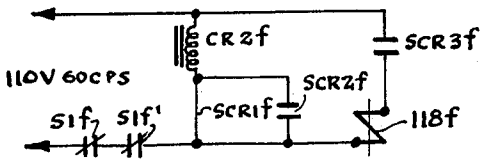

Fig.9

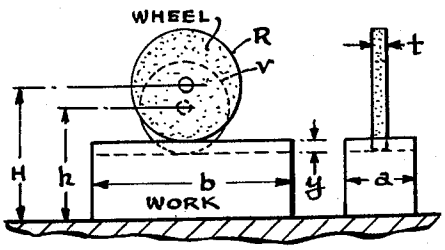

Fig.7A

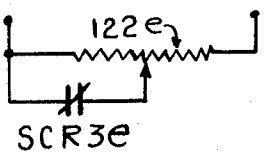

INVENTORS
LORING COES JR
EMMANUEL MILIAS
BY
ATTORNEY

Fig.10

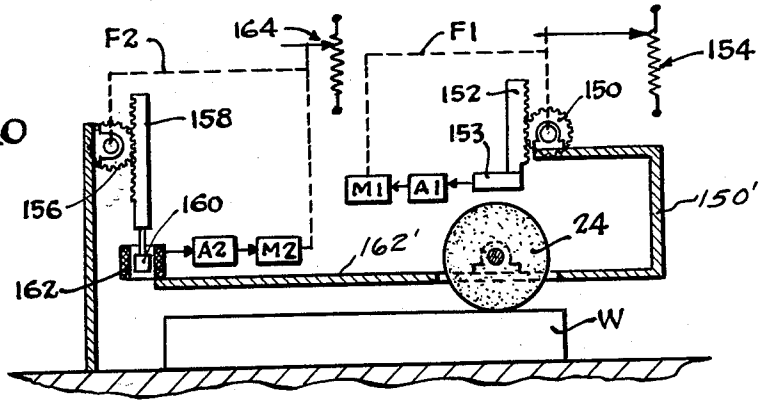

Fig.11

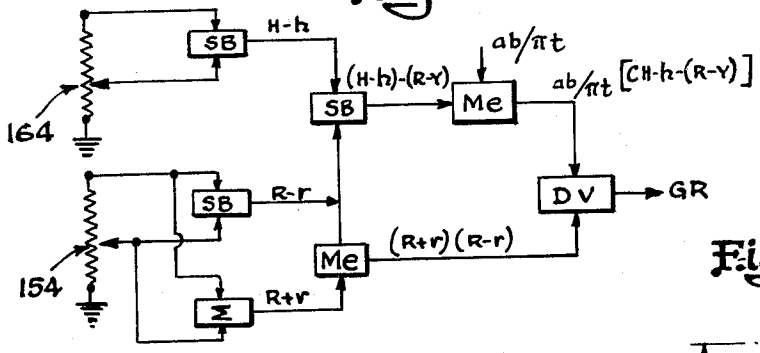

Fig.12

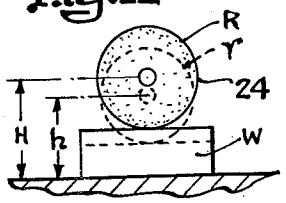

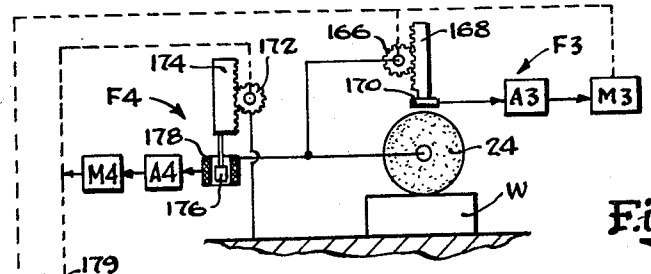

Fig.13

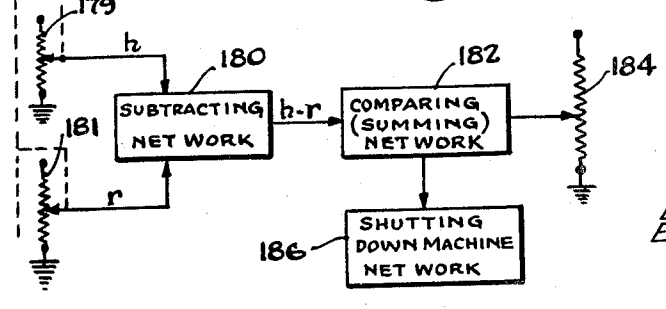

INVENTORS.
LORING COES JR.
EMMANUEL MILIAS
BY
ATTORNEY

United States Patent Office 3,167,891 Patented Feb. 2, 1965

3,167,891
GRINDING MACHINE

Loring Coes, Jr., Princeton, and Emmanuel Milias, Worcester, Mass., assignors to Norton Company, Worcester, Mass., a corporation of Massachusetts

Continuation of application Ser. No. 163,983, Jan. 3, 1962. This application Jan. 25, 1963, Ser. No. 253,966
24 Claims. (Cl. 51—165)

This invention relates to grinding machines and more especially to dressing grinding wheels.

During production grinding a grinding wheel becomes loaded and dull, hence it is customary to back it away from the work and then hold a diamond tool against the surface to restore it to its initial shape, renew its grinding efficiency and to remove nicks and the like. Cumulatively, such frequent dressing operations result in a loss of machine production time and to a lesser degree a loss of abrasive, and hence together constitute a significant factor in manufacturing costs.

The principal objects of this invention are therefore to effect truing and dressing automatically without interruption of production grinding, and to provide an apparatus for accomplishing the same. Other and ancillary objects are to provide, through automatic dressing, a saving in abrasive; to provide for maintaining the grinding wheel in a better condition continuously resulting in a more efficient use of the driving power; to provide for maintaining the grinding ratio between predetermined limits, and thus by this means to accomplish a greater grinding efficiency; and to provide for maintaining the surface flatness within predetermined limits and hence for greater precision. Still another object is to provide for automatic sizing.

The invention is herein illustrated in combination with a grinding machine, including a work support and wheel movable relative to each other, of means operable to establish a norm of operation in which grinding is effected without breakdown of the surface of the wheel, a detector operably sensitive to a change in performance of the machine due to loading and/or dulling of the wheel, and means responsive to operation of the detector to change the norm of operation so as to effect breakdown and renewal of the surface of the wheel. Renewal of the surface of the wheel is effected by cramming more power into each cubic inch of the wheel per unit of time to effect breakdown thereof and such sharpening action operates to re-establish the initial norm of operation and there is means operable by such restoration to render the detector means inoperative and for restoring the machine to normal operation. The means put into operation by the detector may optionally be: means operable to change the speed of rotation of the grinding wheel; or means operable to change the rate of infeed, or cross-feed, or traverse, or any combination of these. The detector may optionally be: means operably responsive to an increase in power input to the wheel shaft due to loading of the wheel; means operably responsive to a change in the grinding ratio; means operably responsive to the condition of the surface; or means operative upon the attainment of a predetermined work size.

The invention will now be described in greater detail with reference to the accompanying drawings wherein:

FIG. 1 is a perspective view in section of a typical grinding machine showing the present invention applied to a motor-driven grinding wheel, work support, and means for effecting infeed, cross-feed, and traversing movements;

FIG. 2 is a wiring diagram of a control circuit for changing the traverse speed on a signal from the power drawn by the grinding wheel motor, wherein only the upper limit is controlled;

FIG. 3 is a wiring diagram of a circuit for controlling

the traverse speed on a signal from the power drawn, wherein the upper and lower limits are automatically and separately controlled;

FIG. 4 is a wiring diagram of a field rheostat which may be substituted for part of the circuit shown in FIG. 3, to effect a decrease in peripheral speed of the wheel on a signal from the power drawn;

FIG. 5 is a schematic diagram of a device which may be substituted for the traversing solenoid in the relay circuit of FIG. 3, to effect control of the infeed on a signal from the power drawn;

FIG. 5*a* is an elevation partly in section of the infeed mechanism;

FIG. 6 is a wiring diagram of a relay circuit which may be substituted for part of the circuit shown in FIG. 3 to effect control of the traverse speed on a signal from the surface finish;

FIG. 7 is a wiring diagram of a field rheostat which may be used in the circuit shown in FIG. 6 in place of the table traversing solenoid to effect a change in peripheral speed on a signal from the surface finish;

FIG. 7*a* is a wiring diagram similar to that shown in FIG. 7 but with the relay set in a normally closed position for cooperation with the circuit shown in FIG. 6;

FIG. 8 is a diagram of a relay circuit which is used, together with the device shown in FIG. 5, to effect control of the infeed on a signal received from the surface finish;

FIG. 9 is a diagram illustrating the manner in which the surface grinding ratio is determined;

FIG. 10 is a diagram of a servo system for measuring the components of the grinding ratio;

FIG. 11 is a circuit for automatically calculating the values for the grinding ratio;

FIG. 12 is a diagram illustrating the manner in which size control is obtained; and

FIG. 13 is a wiring diagram of a servo system for effecting control of size.

The invention herein illustrated is applicable to grinding machines of various kinds wherein there is provision for effecting relative movement of the work and support including infeeding, cross-feeding and traversing. For the purpose of illustration and not by limitation, there is shown in FIG. 1 a grinding machine providing means for feeding the wheel toward the work, traverse feeding of the work, and of cross-feed of the work relative to the wheel.

A typical grinding machine like that shown in the patent to Wood, 2,080,976, May 18, 1937, is illustrated in the drawings, and this machine comprises a base **10** which supports a vertically movable wheel slide **12** adapted to slide in the vertical slideways **14** and **16**. The wheel slide **12** carries a horizontally positioned wheel spindle **18** journalled in suitable bearings. The wheel slide **12** is adapted to be raised or lowered to feed the grinding wheel relatively toward and from the work surface by means of a feeding mechanism comprising a screw **24** which meshes with a nut **26** formed as an integral part of the base **10** or fixedly mounted thereto. The feed screw **24** is rotatably supported in a bearing **28** and carries at its upper end a bevel gear **30** meshing with a bevel gear **32** keyed to a horizontal shaft **34** which is journalled in a projection of the wheel slide **12**. The shaft **34** carries a manually operable feed wheel **36** which may be rotated in either direction, depending upon whether it is desired to raise or lower the position of the grinding wheel.

A transversely movable or cross-feed carriage **40** is arranged to slide toward and away from wheel slide **12**. The carriage is provided with a pair of spaced flat ways **42** and **44** which mate with corresponding flat ways on the base **10**. A suitable transverse guide gib or slideway **46** is provided which is parallel to the ways **42** and **44** and midway therebetween to serve as a guiding means

to guide the carriage 40 transversely relative to the base 10 and toward and away from wheel slide 12.

A longitudinally traversable work supporting table 48 is supported on the usual V-way 50 and flat way 52 for a longitudinal reciprocating movement relative to the carriage 40. A work piece W may be held on the upper surface of the table 48 while its upper surface is ground to the desired extent.

In this type of machine, as illustrated, the grinding wheel is arranged to move in a vertical direction toward and from the work and the work supporting table is arranged to be traversed longitudinally and cross-fed transversely in order that the entire surface of a work piece may be ground.

A fluid pressure mechanism is provided to traverse and reciprocate the longitudinally movable work table. In the form illustrated, a cylinder 54 is fixedly mounted on the upper surface of the transversely movable or cross-feed carriage 40. The cylinder contains a piston 56 which is fixedly mounted to a piston rod 58 which extends through the cylinder 54. Each end of the piston rod 58 is connected to the longitudinally movable table 48.

The transversely movable carriage 40 is arranged to be driven on its cross-feed movement relative to the base 10 and the grinding wheel by means of a rotatable screw 60 which is supported on the carriage 40. The screw 60 meshes with a nut 61 which is fixedly mounted on the base 10. It will be readily apparent from this disclosure that upon rotation of a hand wheel 62 on the outer end of the screw 60, the carriage 40 will be made to move transversely to change the position of the work piece relative to the grinding wheel. The transverse or cross-feeding movement of the work support is essential in a machine of the surface grinder type inasmuch as it is frequently necessary to grind a plane surface which is of greater width that the width of the grinding wheel. The work table is reciprocated longitudinally relative to the wheel and a relative transverse movement or cross-feed is at one or both ends of this table movement so that on successive strokes the wheel operates on different portions of the work so that the entire surface of the work may be ground.

It is desirable to provide a suitable power actuated means for causing a transverse or cross-feed movement of the carriage 40 to cause a transverse movement of the work piece relative to the grinding wheel. In the preferred construction, a fluid pressure actuated power feed is provided which is operated in timed relationship with the table traversing mechanism so that the cross-feeding movement of the carriage takes place at the end of a stroke and during the period of reversal of the motion of the longitudinally movable work table.

As illustrated in the drawings, an in and out movement of the cross-feed carriage is obtained by the gear mechanism comprising gears 68 and 69 mounted on the outer end of the feed screw 60. The gears are mounted on a sleeve 70 which is slidably keyed to the feed screw 60. The sleeve 70 may be moved axially by a reversing lever 72 having a yoked portion engaging a groove in the outer periphery of the sleeve 70. In the position of parts illustrated, lever 72 is in the forward position, meshing the gear 69 with an idler gear 74 which also meshes with a driving gear 76 mounted on a shaft 78, to cause a cross-feeding movement of the slide 40 towards the wheel slide 12. If it is desired to move the carriage away from the wheel slide the operator shifts the lever 72 which serves to slide the sleeve 70 downwardly so that the gear 68 meshes directly with the driving gear 76. If it is desired to cause a manual transverse feeding movement, the lever 72 is moved in a central or neutral position, which serves to move the sleeve 70 to a middle point for disengaging both gears 68 and 69 so as to allow free rotation of the feed screw without turning the gear mechanism.

In order to rotate the driven gear 76, a fluid pressure cylinder 80 is provided integral with the carriage 40. This cylinder contains a piston 82 which has a rack 84 formed on its outer end. The rack 84 meshes with a pinion 86. The pinion 86 is connected to a pawl-carrying lever 88 having a pawl 90 engaging a ratchet wheel 92 which is fixedly connected with the driving gear 76. It will be readily apparent that when fluid is admitted from a hydraulic system, not shown, to move the piston 82 toward the left against the tension of a spring 94, the rack 84 moves to the left causing the pinion 86 to rotate in a counter-clockwise direction carrying the pawl 90 which in turn rotates the ratchet wheel 92, gear 76 and serves to rotate the feed screw 60 in either one or the other direction, depending upon whether the gear 68 or gear 69 is in operative mesh therewith.

The foregoing structure as above stated is shown in Patent 2,080,976 for which reference may be had for further details of construction and operation. It will be obvious that the principle of this invention may be applied to other forms of grinding machines such as: a centerless, or cylindrical or other grinder machine.

Heretofore when using a machine of the foregoing or similar kind, when the wheel became dull or glazed, it has been the practice when the wheel carriage is retracted from the work to apply a diamond dressing tool against the wheel until the surface is reconditioned.

Such undesirable interruption of machine operation is eliminated when following the teaching of this invention and yet the wheel can be reconditioned to have its normal sharpness and efficiency. This saving can be accomplished very simply by increasing the rate of traverse, infeed, crossfeed, or decreasing speed of rotation of the wheel relative to the work without retracting it from the work and hence without interrupting the productive grinding operations. The effect of drastically changing any of the operative factors of the wheel named above is to break down the surface of the wheel so that a clean layer of abrasive is exposed. In the preferred practice of this invention such truing or dressing of the wheel can be effected automatically by making use of changes in the performance of the apparatus which can be detected during a grinding operation. Changes which may be taken advantage of are, for example, a change in the power drawn by the wheel motor, a change in the grinding ratio, or the condition of the surface of the work at any given moment. When one of the aforesaid changes in operative characteristics of the wheel is detected, truing and renewing of the surface may be effected in one or several ways as, for example, by increasing the rate of infeed, increasing the rate of traverse, or cross-feed, or decreasing the speed of the wheel which altered speed of operation can be utilized to break down the surface of the wheel to expose a fresh underlayer of abrasive. As soon as the surface of the wheel is restored as manifest by a return to normal performance, or at the end of a predetermined time of operation, the operation of the wheel or machine feed or feeds may return to normal which is preferably accomplished upon the completion of the entire cross-feed cycle on a surface grinder or other feed cycle on another type of machine. Of course, the wheel is usually run during normal operation at a speed such that its surface does not break down for such would be wasteful of abrasive and would not provide an acceptable surface smoothness or finish.

More specifically, it has been discovered by tests using a vitrified bonded grinding wheel of a relatively soft grade and open structure which is operated normally at a fixed wheel speed of approximately 6000 surface feet/min. and traversing at a rate of 400 inches/min., may be reconditioned by increasing its traverse speed to 1200 inches/min. while permitting production grinding to continue without time loss for wheel dressing. To effect this operation automatically, a control circuit designed to operate between these two limits may be provided. Grinding is permitted at the high traverse speed for a predetermined

number of cuts, for example 10 cuts or complete cross-feed cycles, before switching to the lower or normal traverse rate. A circuit to accomplish this is shown in the diagram of FIG. 2. The wheel driving motor M is supplied with direct current at a constant voltage of 230 volts. Electric power is equal to voltage times current ($P=V\times I$), and since the voltage is kept constant the power drawn is directly proportional to the motor armature current. A sensing device in the form of a low resistance resistor 100 of known resistance is connected in series with the motor armature. Accordingly, if this current is permitted to flow through a resistor 100 of known resistance the voltage drop across the resistor is directly proportional to the power drawn. A low resistance resistor is employed so as not to disturb the motor circuit. The direct current voltage across the resistor is fed into a D.C.–A.C. chopper 102 (vibrator) which converts the D.C. direct current signal to a pulsating current in the primary coil of a transformer 104. Any type of D.C.–A.C. converter may be employed. The pulsating signal, produced in the secondary of the transformer 104, is first smoothed out in this instance by a low-pass filter circuit and is then amplified through the circuit including tubes 108 and 112, and is finally fed into a control relay circuit 110. A potentiometer 114 controls the signal fed to the grid of the tube 112 and a potentiometer 116 controls the bias voltage of the tube 112. Between the two potentiometers 114 and 116 a desired control is attained so that it is possible to actuate a relay CR1 in circuit 110 in response to any predetermined power level attained by the direct current motor M. The control of relay CR1 depends on the plate current of tube 112 and the potentiometer 116 is operable to change the current necessary to effect its operation. The potentiometer 114 permits saturation of the tube 108 depending upon the input signal level which, in turn, increases its plate current.

When the grinding cycle is started with a freshly dressed wheel the motor requires only the minimum power input to effect grinding. However, as grinding continues the wheel face usually becomes loaded to a certain degree and the exposed abrasive grains become dull, hence the power required for grinding increases. When the power increases to a predetermined level, which is set by adjusting the potentiometer 114, control relay CR1 is energized thus starting the control cycle. Energization of relay CR1 closes contacts SCR1*a* and SCR1*b* which, in turn, energize relays CR2 and CR4. Energization of relays CR2 and CR4 closes corresponding contacts SCR2*a* and SCR4*a* which lock the two relays in so that they no longer depend upon relay CR1 and hence will not de-energize if relay CR1 de-energizes. It is not desirable to change the traverse speed while the wheel is actually engaged with the work and until a particular feed cycle under way has been completed, hence the circuit is designed to take effect only when the wheel is off the workpiece at either side. To this end, limit switches S1 and S1′ are placed at either side of the workpiece and closing of either switch, while relay CR2 is energized, energizes relay CR3 which locks itself in by closing contacts SCR3*a*. A second set of contacts SCR3*b*, closed by relay CR3, operate to energize a table traverse speed controlling solenoid 118, which changes the table speed from its normal 400 inches/min. to its higher rate of travel. The solenoid 118 controls the valve supplying fluid pressure to the cylinder 54 which reverses movement of the table. A rotary switch S is energized by limit switches S2*a* and S2*b* situated at each side of the work piece as the wheel traverses from side-to-side through contacts SCR4*b* closed by relay CR4, which switch S counts ten (10) and when the tenth complete cross-feeding cycle or cut is finished, operates to energize a relay L. Energization of relay L opens a normally closed switch SL, thereby de-energizing the complete circuit so that the traversing feed is restored to its normal speed. When this occurs the rotary switch S jumps to position 2 and is ready to count the table traverse strokes again when called upon to do so.

The circuit diagram illustrated in FIG. 3 provides another means designed to effect dressing of the grinding wheel automatically by controlling traverse speed on a signal from the power drawn. The circuit is essentially the same as that shown in FIG. 2, however, the counting switch S used in the circuit shown in FIG. 2 is omitted herein and the circuit is made responsive in sequence to the upper and lower limits whereby the grinding operation is automatically controlled. The circuit operates as follows: The current through the resistor 100–X is directly proportional to the power drawn. Consequently, the voltage across the resistor is also proportional to the grinding power. This voltage is changed to a pulsating signal by any conventional device 102–X and supplied to the transformer 104–X through a suitable filter 106–X and the transformer output is amplified by the tube circuit including 108–X and 112–X. The amplified signal is fed into the relay control circuit 110–X. A potentiometer 116*a*–X provides for adjusting the bias of the tube 112–X for the upper power limit and a potentiometer 116*b*–X provides for the lower power limit.

The wheel in good condition continues grinding at a normal rate until it loads and/or dulls which causes the power to effect grinding to increase and when it reaches a predetermined upper limit the control relay CR1–X under the influence of potentiometer 116*a*–X and tube 112–X becomes energized to close contact SCR1–X. The closing of contact SCR1–X energizes relay CR2–X which becomes locked in by closing switch SCR2*a*–X, so that relay CR2–X is now independent of relay CR1–X. Energization of relay CR2–X also closes switch SCR2*b*–X. The cross-feed continues at its normal rate until a cycle is completed whereupon one or the other of the one way acting limit switches S1*a* or S1*a*′ is actuated to clear the solenoid control circuit. Then upon further movement either limit switch S2 or S2′ is actuated and since relay CR2–X is energized and contact SCR2*a*–X is closed, relay CR3–X becomes energized, locks itself in through contact SCR3*a*–X and energizes relay CR4–X through SCR3*b*–X, which effects operation of the table traverse speed control solenoid 118–X. This changes the traverse speed to its higher rate. It also changes the bias of the tube 112–X by switching the potentiometer 116*b*–X in and the potentiometer 116*a*–X out of the circuit by way of contacts SCR4–X. The new bias setting permits activation of relay CR1–X down to the lower point limit level. The cross-feed cycle continues in the same direction until either one of the limit switches S3 or S3′ is actuated to de-energize relay CR2–X so that sensing will again take place if the grinding power remains between the two limits since relay CR3–X is locked in.

At the end of each cross-feed cut or cycle which is now taking place at the faster rate of feed, one or the other of the one-way acting limit switches S1*a* and S1*a*′ will be opened to de-energize relay CR3–X. However, if the power to the motor has not decreased below the lower power limit setting of 116*b*–X and tube 112–X, the relay CR1–X is again energized which, in turn, energizes and locks in relay CR2–X and, as previously related relays CR3–X and CR4–X, by way of the switches S2 or S2′, energize the table traverse speed control solenoid so as to maintain it at the high speed level. But when the power falls below the lower power limit setting of 112–X the relay CR1–X will not be energized, hence SCR1–X is not closed and when one of the switches S1*a* or S1*a*′ is opened, the control circuit is cleared. When CR4–X is deenergized SCR4–X is operated to reestablish the high setting on the potentiometer 116*a*–X and tube 112–X. When switches S2 or S2′ are subsequently actuated, they will not energize the solenoid CR3–X because of the fact that relay CR2–X is not energized. Relay CR4–X remains deenergized in this instance and the traverse speed

will return to its low rate of travel when 118–X is returned to its initial setting upon clearing of the control circuit.

One typical example of a wheel dressed in accordance with the teaching of this invention made use of a 7¾" diameter wheel, ½" thick, mounted on a 1¼" spindle. The wheel was made with a 46 mesh alumina abrasive grain, the wheel being of a relatively soft grade, of a relatively porous structure, and having a vitrified bond. This wheel was run on a Norton 6" x 18" surface grinder, the wheel being operated at a speed of approximately 6000 surface feet/min. A Vega steel was ground at a cross-feed of 0.050" per pass. The downfeed was at the rate of 0.002" per cross-feed cycle and a water coolant was used. A traverse rate was established under one test of 400" per minute and a dressing rate of 1200" per minute. In another test a change of traverse rate from 400" per minute to 1400" per minute was used. The power used to drive the wheel was continuously fed into a control circuit like that disclosed in FIG. 3. The wheel surface was automatically renewed upon becoming dulled and/or loaded by an increase in the rate of traverse, and it was observed that invariably the wheel surface was renewed efficiently whereupon the traverse rate was automatically returned to the rate of 400" per minute when normal grinding conditions had been reestablished.

The dressing of the wheel by causing it to break down while continuing its grinding cycle may be effected also by controlling the peripheral speed of the wheel itself on a signal from the power drawn. This may be accomplished by using the circuitry illustrated in FIG. 3, modified by substituting for the solenoid 118–X therein, means for changing the peripheral speed of the wheel. To this end, as shown in FIG. 4, a field rheostat 120 including a contact SCR4*b* is placed across the field of the D.C. motor M. When the switch SCR4*b* is open the motor runs at high speed and when it is closed it runs at lower speed controlled by the adjustment of the rheostat. When this control is used, the traverse and cross-feed means for the work are usually continued at their normal rate, but of course relay 118 or 118–X of either FIG. 2 or 3 could be retained and utilized to operate a second switch SCR4*b* and/or the traverse or crossfeeds simultaneously with a coordinated relative wheel slow down.

Wheel sharpening or dressing may be effected also by controlling the infeed of the wheel into the work on a signal from the power drawn. Again, the circuitry shown in FIG. 3 may be employed by omitting the solenoid 118–X and substituting therefor the device shown in FIG. 5, and additional limit switches. Conveniently, the device is adapted to effect infeed through the gearing normally employed for effecting manual infeed. As shown, (FIG. 5*a*) the shaft 34 has an extended portion 120 connected by a one-way clutch 122 to a gear 124, the latter being engaged with a rack bar 126 (FIG. 5). The rack bar 126 has a portion 128 extending through one end of a cylinder 130 to which there is secured a piston 132. By supplying fluid to the cylinder the piston may be moved therein and, in turn, move the rack bar 126, rotate the gear 124 and hence effect infeed through the one-way clutch 122. A collar 134 is adjustably fixed to the extension 128 and is movable therewith between the end of the cylinder and a fixed stop 136. Between the end of the cylinder and the fixed stop 136 there is a solenoid-operated limit block 138. The distance X2 between the collar 134 and the limit stop 138 represents the normal condition for grinding at a low rate of infeed. Spring 140 tends to hold the piston in the right hand position in the cylinder with the collar 134 engaged with the cylinder 130. When the relay CR4–X is energized in response to a signal from the power drawn, contact SCR4*c*, FIG. 5, is opened to deenergize relay 200, allowing the limit pin 138 to be retracted by spring 201, so that the collar 134 may move past the end of the limit pin 138 and into engagement with the fixed stop 136. Limit switches S0*c* and S0*c'* situated at opposite sides of the work for actuation by the work support are provided for controlling the supply of hydraulic pressure to the cylinder 130 to actuate the rack 124 by moving the piston 132 to the left.

Dressing of the wheel may be controlled by controlling the speed of the cross-feed on a signal from the power drawn, for example, on a surface grinder by way of a circuit which is identical with that just described with reference to FIG. 5. For a cylindrical or a centerless grinder where there is no cross-feed, the speed of the work drive motor or the speed of the regulating wheel respectively, may be controlled by a circuit which is identical to that shown in FIG. 4.

Dressing of the wheel may be effected in a similar manner by controlling traverse speed on a signal from the surface finish. This may be accomplished with the control circuit shown in FIG. 3, by the use of a transducer in the form of a tracer-type profilometer for measuring surface roughness. Such an instrument is manufactured by the Micrometrical Manufacturing Company and may be connected into the circuit of FIG. 3 to actuate relay CR1–X in response to the surface condition. To this end, the relay circuit of FIG. 3 is modified by substituting the circuit illustrated in FIG. 6, which contains a switch SCR1*d* which is closed by relay CR1–X to energize a relay CR2*d* to operate holding switch SCR2*d* and close a switch SCR3*d* to actuate a traversing solenoid 118*d*. Limit switches S1*d* and S1*d'* and S2*d* and S2*d'* are provided, the latter serving to make the desired surface condition measurement of the product.

Dressing of the wheel may be effected also by controlling the peripheral speed of the wheel on a signal from the surface finish and to this end, as shown in FIG. 7, or FIG. 7*a* a field rheostat 122*e* and switch SCR3*e* may be used in place of the solenoid 118*d* and switch SCR3*d* of the circuit shown in FIG. 6.

Dressing of the wheel may be effected also by controlling the infeed on a signal from the surface finish and to this end the relay circuit of FIG. 6 may be changed to that shown in FIG. 8 in association with the device shown in FIG. 5. The circuit contains relay CR2*f*, switches SCR1*f*, SCR2*f*, SCR3*f*, S1*f*, S1*f'*, and solenoid 118*f* for actuating relay 200 under the influence of S1*f* and S1*f'*.

Dressing may be effected also by controlling the speed of the cross-feed of a surface grinder on the signal from the surface finish with the same circuit as shown in FIG. 8, and with a centerless grinder a circuit like that shown in FIG. 7 wherein the relay SCR3*e* is normally open, and which closes to speed up the regulating wheel of the centerless grinder to dress the grinding wheel by changing the relative speed between the grinding wheel and the work. Dressing can be effected with a cylindrical grinder by making use of the normally closed circuit of FIG. 7*a* which likewise may be used to speed up the motor for driving the work to accomplish a change in the relative motion between the work and the grinding wheel to produce the desired wheel dressing.

Self dressing of the wheel may be effected by controlling the traverse speed from a signal derived from the instantaneous grinding ratio. For example, in a surface grinder the grinding ratio is equal to the number of cubic inches of metal removed divided by the number of cubic inches of wheel wear which is represented conveniently by the following formula:

$$\text{Grinding ratio}=GR=\frac{\text{Metal removed in in.}^3}{\text{Wheel wear in in.}^3}=\frac{A}{B}$$

Referring now to FIG. 9, $A=b\cdot a\cdot y$ where b=the length of the work, a=the width of the work, and y=the thickness of the metal portion removed; y, however, is equal to the movement of the wheel toward the work which is $(H-h)$, minus the reduction in the diameter of the wheel which is $R-r$. Accordingly,

$A=bay=ab[(H-h)-(R-r)]$ and $B=t(\pi R^2-\pi r^2)$

where t is the thickness of the wheel and R and r are the respective diameters of the wheel prior to and after wear. Accordingly, $B=t\pi(R+r)(R-r)$. Employing the foregoing values for A and B, the grinding ratio is:

$$GR=\frac{ab}{\pi t}\cdot\frac{[(H-h)-(R-r)]}{(R+r)(R-r)}$$

The quantities H, h, R and r may be continuously measured by the simultaneous operation of the two servos F1 and F2 as shown in FIG. 10. Diagrammatically the wheel **24** is shown engaged with the work W. The servo F1 serves to constantly measure the radius of the wheel and comprises a motor M1 which drives a gear **150** supported on the frame **150'** and rack **152**, the latter mounting a magnetic or capacitance pick-up **153** adjacent the surface of the wheel which is sensitive to a change in radius. This change is fed to the motor M1 through an amplifier A1. As the radius diminishes and the gear **150** is driven, the wiper of potentiometer **154** is proportionately adjusted and the voltage range picked off of the wiper of the potentiometer **154** thus changes proportionately. The servo F2 serves to constantly measure the position of the center of the wheel relative to the surface being ground and includes a motor M2 which drives a gear and rack **156**, **158**, the latter mounting a position pick-up **160** which determines the relative position of the center of the wheel at any given moment. The gear is supported in a fixed position relative to the surface of the work support table and the pick-up **160**, by movement relative to a coil **162** carried on frame element **162'** integral with the wheel support, provides a signal which is fed to the motor M2 through an amplifier A2. As the center of the wheel descends with coil **162** and servo F2 adjusts pick-up **160** by driving gear **156** in response to the change in signal from coil **162**, the wiper of the potentiometer **154** is simultaneously adjusted proportionately by servo F2 and the voltage range picked off of the wiper of the potentiometer **164** changes proportionately. As long as the values r and h do not alter the value of GR in the aforementioned formula, the apparatus will operate in its normal manner; however, as soon as the value of GR is changed to a predetermined extent, a signal is produced which may be used in the circuit shown, for example, in FIG. 2 to increase the speed of traverse. In this last described control means, the grinding wheels used for grinding must be made magnetically susceptible to operate an electromagnetic pick-up **153** or must be electrically conducting to operate a capacitance pick-up.

As above explained, knowing the H, h, R, r values the instantaneous grinding ratio can be calculated automatically by the circuit shown in the diagram of FIG. 11, wherein the legend SB represents a conventional electronic subtracter, the legend Σ a conventional adder, the legend Me a known multiplier and the legend Dv a known divider. The other letters used in this diagram correspond to those disclosed in FIG. 9. This circuit which calculates the grinding ratio instantaneously may be used as an infeed to the chopper **10**–X of the circuit shown in FIG. 3.

Dressing of the wheel may be effected in this last described situation by controlling the peripheral speed grinding wheel on a signal from the grinding ratio circuit by employing the circuit shown in FIG. 4.

Dressing of the wheel may be effected also by controlling the infeed on a signal from the grinding ratio circuit using the circuits of FIGS. 3, 10 and 11 with the circuit shown in FIG. 5. For the cross-feed control of a surface grinder integrated with the grinding ratio, the circuit shown in FIG. 5 including means shown in FIGS 3, 10 and 11 may be employed, while for a cylindrical or centerless grinder control, the circuit shown in FIG. 4 may be used with that shown in FIGS. 3, 10 and 11.

The circuits described above in FIGS. 3, 10 and 11 may be used incidentally for an alternative purpose, to wit to effect a size control of the work. By taking advantage of the magnetically susceptible or electrically conducting properties of a grinding wheel, the relation of the grinding wheel to the work in a surface grinder can be measured continuously as the wheel removes material from the work and is itself reduced in diameter. Where H represents the initial position of the center of the grinding wheel and h the position of the center of the grinding wheel as a result of the amount of downfeed or infeed of the wheel into the work and R represents the initial radius of the grinding wheel and r the instantaneous radius of the grinding wheel, from the drawing shown in FIG. 12, it is apparent that the initial size of the work is $H-R$ and the desired size of the work piece is some value of $h-r$. Using the circuitry shown in FIG. 13, the values of h and r may be compared at all times to a set rate thereby to control size. Referring to FIG. 13, there is shown a wheel radius servo F3 comprising a motor M3 which drives a gear **166** and rack **168**, the latter mounting a magnetic or capacitance pick-up **170** adjacent the surface of the wheel. A second servo F4 consisting of a motor M4, gear **172** and rack **174** mounts a position pick-up **176** situated in a follower coil **178**. The signals from the two servos are suitably related through potentiometers **179** and **181** and are continuously compared in a circuit including a subtracting network **180** and a comparator **182** which may be adjusted to have a predetermined setting by means of rheostat **184**. When a predetermined relationship is established between the indications received from the sensing devices **170** and **176** the circuit is operative to terminate operation of the machine through network **186**.

The technique described above may be used on a cylindrical grinder or a centerless grinder with obvious modifications, to accomplish the self sharpening action of a grinding wheel without discontinuing the grinding cycle.

In all of the foregoing illustrations, the variables have been employed to effect self dressing of the wheel; however, these same variables also can be used for the following purposes:

(1) To effect a grinding machine operation under circumstances in which the power supplied to the motor is maintained within limits by automatic change in one or more of the following:

(*a*) traverse rate of the work by the wheel; and/or

(*b*) peripheral speed of the grinding wheel; and/or

(*c*) infeed of the wheel to the work and/or cross-feed of the work by the wheel.

(2) To effect a grinding machine operation under circumstances in which the grinding ratio is maintained within limits by effecting an automatic change of one or more of the following:

(*a*) traverse rate of the wheel by the wheel; and/or

(*b*) peripheral speed of the grinding wheel; and/or

(*c*) infeed of the wheel to the work and/or cross-feed of the work relative to the grinding wheel.

(3) To effect a grinding machine operation in such a manner that the surface finish is maintained within predetermined limits by effecting an automatic change of one or more of the following:

(*a*) Traverse rate of the work by the grinding wheel; and/or

(*b*) Peripheral speed of the grinding wheel; and/or

(*c*) Infeed of the grinding wheel to the work and/or cross-feed of the work by the grinding wheel.

(4) To effect a grinding machine operation in which the wheel size and work finish may be maintained within predetermined limits by either capacitance or electromagnetic sensing elements used in conjunction with either electrically conducting or magnetically susceptible wheels respectively.

It should be understood that the present disclosure is for the purpose of illustration only and that this invention

includes all modifications and equivalents which fall within the scope of the appended claims.

This application is a continuation of application Serial No. 163,983 filed January 3, 1962, now abandoned.

We claim:

1. The combination in a grinding machine having a work support and a grinding wheel movable relative to each other, of means for establishing a norm of operation in which conventional grinding is effected, a detector operably sensitive to a change in the performance of the machine due to a change in the grinding characteristics of the wheel such as are produced by loading and dulling of the wheel, means responsive to operation of the detector to change the norm of operation to effect a breakdown and renewal of the surface of the wheel, and means for rendering the last-named means inoperative after a predetermined length of time.

2. The combination in a grinding machine having a work support and a grinding wheel movable relative to each other, of means for establishing a norm of operation in which conventional grinding is effected, a detector operably sensitive to a change in the performance of the machine due to a change in the grinding characteristics of the wheel such as are produced by loading and dulling of the wheel, means responsive to the operation of the detector to increase the rate of attrition between the wheel and the work sufficiently to effect a breakdown and renewal of the surface of the wheel, and a timer operable to render the last-named means inoperable at the end of a predetermined time.

3. The combination in a grinding machine having a work support and a grinding wheel movable relative to each other, of means for establishing a norm of operation in which conventional grinding is effected, a detector operably sensitive to a change in the performance of the machine due to a change in the grinding characteristics of the wheel such as are produced by loading and dulling of the wheel, means responsive to the operation of the detector to decrease the surface speed of the wheel relative to the work sufficiently to effect a breakdown and renewal of the surface of the wheel, and means operable to increase the surface speed of the wheel relative to the work to approximately its initial rate at the end of a predetermined time.

4. The combination in a grinding machine having a work support and a grinding wheel movable relative to each other, of means for establishing a norm of operation in which conventional grinding is effected, a detector operably sensitive to a change in the performance of the machine due to a change in the grinding characteristics of the wheel such as are produced by loading and dulling of the wheel, means responsive to the operation of the detector to increase the speed of traverse of the work relative to the wheel sufficiently to effect a breakdown and renewal of the surface of the wheel, and a timer operable to restore the speed of traverse to its normal rate after a predetermined number of passes.

5. The combination in a grinding machine having a work support and a grinding wheel movable relative to each other, of means for establishing a norm of operation in which conventional grinding is effected, and a detector operably sensitive to a change in performance of the machine due to a change in the grinding characteristics of the wheel such as are produced by loading and dulling of the wheel, and means responsive to the operation of the detector to change the norm of operation to effect a breakdown and renewal of the surface of the wheel, said detector being operably sensitive to the change in performance of the machine due to renewal of the surface of the wheel to restore said initial norm of operation.

6. The combination in a grinding machine having a work support and a grinding wheel movable relative to each other, of means for establishing a norm of operation in which conventional grinding is effected, sensing means for producing a signal of predetermined level during normal operation, said sensing means being operable to produce an increase in the signal when there is a change in the performance of the machine due to a change in the grinding characteristics of the wheel such as are produced by loading and dulling, and control means operable by the increase in the signal, when it reaches a predetermined level, to change the norm of operation in a direction to effect a breakdown and renewal of the surface of the wheel, said sensing means being operable upon renewal of said surface to decrease the signal approximately to its initial predetermined level, and said control means being rendered inoperative by the decrease in the signal to said predetermined level.

7. The combination in a grinding machine having a work support and a grinding wheel movable relative to each other, of means for establishing a norm of operation in which conventional grinding is effected, sensing means for producing a signal of predetermined level during normal operation, said means being operable to produce an increase in the signal due to a change in the performance of the machine, means for monitoring the signal, said means being operable, on the one hand, to increase the norm of operation sufficiently to effect a breakdown and renewal of the surface of the wheel when the signal increases to a predetermined upper level and, on the other hand, to restore the norm of operation approximately to its initial level when the signal decreases to a predetermined lower level.

8. The combination in a grinding machine, having a work support and a grinding wheel movable relative to each other, of means for establishing a norm of operation in which conventional grinding is effected, means producing a signal of predetermined level at the established wheel speed, said means being operable to produce an increase in the signal due to a change in performance of the machine due to a change in the grinding characteristics of the wheel such as are produced by loading and dulling of the wheel, and means for monitoring the increase in the signal, said means being operable, on the one hand, when the signal reaches a predetermined upper level to decrease the speed sufficiently to effect a breakdown and renewal of the surface of the wheel and, on the other hand, when the signal decreases to a predetermined lower level by renewal of the surface of the wheel to restore the speed to its initial amount.

9. The combination in a grinding machine having a work support and a grinding wheel infeed means to move the grinding wheel and the work support relatively toward one another, drive means for controlling the rate of infeed movement of the wheel relative to a piece of work on said support, of means for establishing a norm of operation in which conventional grinding is effected without breakdown of the surface of the wheel, means producing a variable signal of predetermined level at the normal rate of infeed, said means being operable to produce a variation in the signal due to a change in performance of the machine due to a change in the grinding characteristics of the wheel such as are produced by loading and dulling of the wheel, and means for monitoring the variation in the signal, said means being operable, on the one hand, when the signal reaches a predetermined level of variation in one direction to increase the infeed of the wheel relative to the work, sufficiently to effect a breakdown and a renewal of the surface of the wheel and, on the other hand, when the signal varies to a predetermined level of variation in an opposite direction by renewal of the surface of the wheel to restore the infeed to its initial amount.

10. The combination in a grinding machine having a work support with a piece of work thereon, and a grinding wheel movable relative to the work including a cross-feed means, means for establishing a norm of operation in which conventional grinding is effected without breakdown of the surface of the wheel, means producing a

variable signal of predetermined level at the normal rate of cross-feed of the work relative to the wheel, said means being operable to produce a variation in one direction in the signal due to a change in performance of the machine due to a change in the grinding characteristics of the wheel such as are produced by loading and dulling of the wheel, and means for monitoring the variation in the signal, said means being operable, on the one hand, when the signal reaches a predetermined level of variation to increase the rate of cross-feed sufficiently to effect breakdown and renewal of the surface of the wheel and, on the other hand, when the signal varies to a predetermined level of variation in the opposite direction by renewal of the surface of the wheel to restore the cross-feed to its initial rate.

11. The combination in a grinding machine having a work support with a work piece thereon and a grinding wheel movable relative to the work including a traverse feed means, of means for establishng a norm of operation in which conventional grinding is effected without breakdown of the surface of the wheel, means producing a variable signal of predetermined level at the established rate of traverse feed of the work relative to the wheel, said means being operable to produce a variation in one direction in the signal due to a change in performance of the machine due to a change in the grinding characteristics of the wheel such as are produced by loading and dulling of the wheel, and means for monitoring the variations in the signal, said means being operable, on the one hand when the signal reaches a predetermined level of variation to increase the rate of traverse sufficiently to effect breakdown and renewal of the surface of the wheel and, on the other hand, when the signal varies to a predetermined level of variation in the opposite direction by renewal of the surface of the wheel to restore the traverse to its initial rate.

12. The combination in a grinding machne having a work support and a grinding wheel movable relative to each other and a motor for driving the wheel, of power driven means including a motor for establishing a norm of operation in which conventional grinding is effected without breakdown of the surface of the wheel, sensing means producing a signal of predetermined level during normal grinding, said sensing means being operable in response to an increase in power drawn by the motor to produce an increase in the signal, and means for monitoring the increase in the signal, said monitoring means being operable, on the one hand, to effect an increase in the norm of operation of the power driven means when the signal reaches a predetermined upper level, said increase being sufficient to break down and renew the surface of the wheel, and said monitoring means being operable on the other hand, when the signal reaches a predetermined lower level to restore the machine approximately to its initial norm of operation.

13. Apparatus according to claim 12, wherein there is means for adjusting the upper and lower levels of the signal.

14. The combination in a grinding machine having a work support and a grinding wheel movable relative to each other, of power driven means including a motor for establishing a norm of operation in which conventional grinding is effected without breakdown of the surface of the wheel, sensing means for producing a signal of predetermined level at said predetermined norm for grinding, said sensing means being responsive to change in the grinding ratio to change the signal, and means for monitoring the signal, said monitoring means being operable, on the one hand, to change the grinding ratio sufficient to break down and renew the wheel when said signal changes in a predetermined degree and, on the other hand, when the signal changes to a predetermined level said monitoring means is operative to restore the norm of operation of the machine to its normal grinding ratio.

15. The combination in a grinding machine having a work support and a grinding wheel movable relative to each other, of means for establishing a norm of operation in which grinding is effected without breakdown of the surface of the wheel, a detector operably sensitive to a change in the surface characteristic of the work being operated upon, said detector being operable to produce a signal of a preset value, and means for monitoring the signal, said means being operable to alter the norm of operation when the signal undergoes a predetermined change produced by a variation in the condition of the surface characteristics resulting from a change in the grinding characteristics of the wheel such as are produced by load and dulling of the wheel, sufficiently to effect breakdown and renewal of the surface of the wheel and being further operable when the signal returns to approximately the preset value to restore the machine to its approximate initial norm of operation.

16. Apparatus according to claim 15, wherein the detector is a profilometer.

17. The method of dressing the surface of a rotatably driven grinding wheel during performance of a grinding operation which comprises establishing a rate of work attrition which is not destructive of the wheel; changing said rate to produce a greater degree of attrition when the grinding characteristics of the wheel change such as when the wheel has become loaded and dulled to effect breakdown of the surface of the wheel; and after the surface of the wheel has been renewed, restoring the norm of operation to its normal condition.

18. The method of dressing the surface of a driven grinding means during a grinding operation which comprises, increasing the rate of grinding attrition of the beyond that normally employed for grinding to effect simultaneous grinding and breakdown of the surface of the grinding means and then restoring the normal grinding condition.

19. The method of dressing the surface of a rotatably driven grinding wheel during a grinding operation which comprises, establishing a norm for the grinding operation, detecting a change in the norm and employing the change to increase the grinding action performed by the wheel on the work for a time period long enough to break down the surface of the wheel and then restoring the established norm of operation.

20. The method of dressing the surface of a rotatably driven grinding wheel during a grinding operation which comprises, establishing a norm for the grinding operation, detecting a change from the normal and employing the change to decrease the speed of rotation of the wheel relative to the work long enough to break down the surface of the wheel and then restoring the speed of the wheel approximately to its initial rate.

21. The method of dressing the surface of a driven grinding means during a grinding operation which comprises; establishing a norm for the grinding operation; continuously measuring the norm and when a change in the norm of operation is detected, changing the rate of attrition of the work accomplished by the grinding means to effect a breakdown of the surface of the grinding means; and then restoring the operation to its normal condition.

22. The method of dressing the surface of a rotatably driven grinding wheel during a grinding operation which comprises; establishing a norm for the grinding operation; continuously measuring the norm and when a change in the norm is detected, increasing the rate of traverse of the wheel relative to the work to break down the surface of the wheel; and thereafter returning the rate of traverse to its original rate.

23. The method of dressing the surface of a rotatably driven grinding wheel during a grinding operation which comprises; establishing a norm infeed of the wheel relative to the work for the grinding operation; continuously measuring the norm and when a change in the norm is detected, increasing the rate of feed of the wheel relative

to the work until the surface of the wheel is broken down; and then restoring the rate of infeed to its initial amount.

24. The combination in a grinding machine having a work support with a piece of work thereon and a grinding wheel movable relative to the work support, means for continuously driving the wheel while holding it in contact with the work on said support, means for establishing a norm of operation involving the establishment of a reasonable wheel speed to work speed relationship in which conventional grinding is effected, a detector operably sensitive to a change in the performance of the machine due to a change in the grinding characteristics of the wheel such as are produced by loading and dulling of the wheel, and means responsive to the operation of the detector to change the norm of operation while continuously maintaining the grinding operation, said last named means being operative periodically in response to said detector to change the norm of operation while maintaining said wheel and work on said support in contact to effect breakdown and renewal of the surface of the wheel.

References Cited in the file of this patent

UNITED STATES PATENTS

2,168,596 Hall ---------- Aug. 8, 1939