US00RE45606E

(19) **United States**
(12) **Reissued Patent**
Neyman et al.

(10) **Patent Number: US RE45,606 E**
(45) **Date of Reissued Patent: Jul. 7, 2015**

(54) **CALL AND DATA CORRESPONDENCE IN A CALL-IN CENTER EMPLOYING VIRTUAL RESTRUCTURING FOR COMPUTER TELEPHONY INTEGRATED FUNCTIONALITY**

(71) Applicants: **Igor Neyman**, Palo Alto, CA (US); **Myhailo Barskyy**, San Francisco, CA (US); **Alec Miloslavsky**, San Carlos, CA (US); **Oleg Bondarenko**, San Francisco, CA (US); **Valeriy Issayev**, Foster City, CA (US); **Andrei Petrov**, Redwood City, CA (US); **Pavel Karpenko**, Concord, CA (US)

(72) Inventors: **Igor Neyman**, Palo Alto, CA (US); **Myhailo Barskyy**, San Francisco, CA (US); **Alec Miloslavsky**, San Carlos, CA (US); **Oleg Bondarenko**, San Francisco, CA (US); **Valeriy Issayev**, Foster City, CA (US); **Andrei Petrov**, Redwood City, CA (US); **Pavel Karpenko**, Concord, CA (US)

(73) Assignee: **GENESYS TELECOMMUNICATIONS LABORATORIES, INC.**, Daly, City, CA (US)

(21) Appl. No.: **13/789,640**

(22) Filed: **Mar. 7, 2013**

Related U.S. Patent Documents

Reissue of:

(64) Patent No.: **7,903,807**
Issued: **Mar. 8, 2011**
Appl. No.: **10/843,802**
Filed: **May 11, 2004**

U.S. Applications:

(60) Continuation of application No. 10/234,691, filed on Sep. 3, 2002, now Pat. No. 6,735,298, which is a con

(Continued)

(51) **Int. Cl.**
H04M 3/00 (2006.01)
H04M 3/51 (2006.01)

(52) **U.S. Cl.**
CPC ***H04M 3/51*** (2013.01); ***H04M 3/5191*** (2013.01)

(58) **Field of Classification Search**
USPC 370/351–356; 379/265.01, 265.02, 379/265.09, 265.11, 266.01, 266.09; 709/201–203, 206, 216–219, 227–229
See application file for complete search history.

(56) **References Cited**

U.S. PATENT DOCUMENTS

3,914,559 A 10/1975 Knollman
4,048,452 A 9/1977 Oehring et al.

(Continued)

FOREIGN PATENT DOCUMENTS

AT 270486 7/2004
AT 281039 11/2004

(Continued)

OTHER PUBLICATIONS

Mattison, Rob, "Data Warehousing and Data Mining for Telecommunications," Artech House, Boston, 1997, 7 pages.

(Continued)

Primary Examiner — Hemant Patel
(74) *Attorney, Agent, or Firm* — Christie, Parker & Hale, LLP

(57) **ABSTRACT**

A call center having agent stations comprising telephones connected to computer stations by a Telephone Application Programming Interface (TAPI)-compliant bridge has data pertaining to callers stored in a database on a local area network (LAN) to which the computer stations are also connected. Origination data for incoming calls, both conventional calls to the telephones and computer-simulated calls to the computer platforms, is used as a key to extract data pertaining to calls from the database for display on video display units (VDUs) of the computer workstations where the calls are terminated. In some cases, data is only extracted and displayed for calls from previously listed origination points.

6 Claims, 8 Drawing Sheets

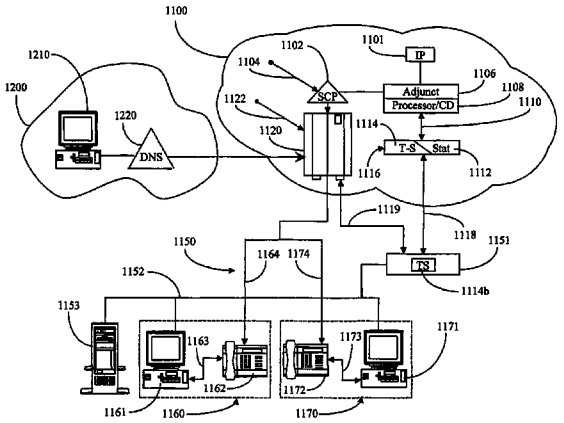

Related U.S. Application Data

tinuation of application No. 08/949,566, filed on Oct. 14, 1997, now Pat. No. 6,480,600, which is a division of application No. 08/928,861, filed on Sep. 12, 1997, now Pat. No. 7,031,442, said application No. 10/843,802 is a continuation-in-part of application No. 08/928,861, filed on Sep. 12, 1997, now Pat. No. 7,031,442, which is a continuation-in-part of application No. 08/869,815, filed on Jun. 4, 1997, now Pat. No. 6,148,074, which is a continuation-in-part of application No. 08/802,667, filed on Feb. 19, 1997, now Pat. No. 6,201,863, which is a continuation-in-part of application No. 08/797,420, filed on Feb. 10, 1997, now Pat. No. 6,185,291, said application No. 08/928,861 is a continuation-in-part of application No. 08/833,340, filed on Apr. 3, 1997, now Pat. No. 6,560,328, and a continuation-in-part of application No. 08/891,675, filed on Jul. 9, 1997, now Pat. No. 6,205,412.

(56) **References Cited**

U.S. PATENT DOCUMENTS

4,290,141	A	9/1981	Anderson et al.
4,320,256	A	3/1982	Freeman
4,345,315	A	8/1982	Cadotte et al.
4,355,207	A	10/1982	Curtin
4,355,372	A	10/1982	Johnson et al.
4,400,587	A	8/1983	Taylor et al.
4,439,636	A	3/1984	Newkirk et al.
4,451,700	A	5/1984	Kempner et al.
4,489,438	A	12/1984	Hughes
4,512,011	A	4/1985	Turner
4,517,410	A	5/1985	Williams et al.
4,521,643	A	6/1985	Dupuis et al.
4,523,055	A	6/1985	Hohl et al.
4,528,643	A	7/1985	Freeny, Jr.
4,539,435	A	9/1985	Eckmann
4,555,903	A	12/1985	Heaton
4,558,180	A	12/1985	Scordo
4,559,415	A	12/1985	Bernard et al.
4,566,030	A	1/1986	Nickerson et al.
4,567,323	A	1/1986	Lottes et al.
4,577,062	A	3/1986	Hilleary et al.
4,577,067	A	3/1986	Levy et al.
4,578,700	A	3/1986	Roberts et al.
4,580,012	A	4/1986	Matthews et al.
4,584,602	A	4/1986	Nakagawa
4,587,379	A	5/1986	Masuda
4,598,367	A	7/1986	DeFrancesco et al.
4,603,232	A	7/1986	Kurland et al.
4,611,094	A	9/1986	Asmuth et al.
4,625,276	A	11/1986	Benton et al.
4,630,200	A	12/1986	Ohmae et al.
4,630,201	A	12/1986	White
4,634,809	A	1/1987	Paulsson et al.
4,649,563	A	3/1987	Riskin
4,654,482	A	3/1987	DeAngelis
4,667,287	A	5/1987	Allen et al.
4,674,044	A	6/1987	Kalmus et al.
4,679,189	A	7/1987	Olson et al.
4,696,029	A	9/1987	Cohen
4,697,282	A	9/1987	Winter et al.
4,737,983	A	4/1988	Frauenthal et al.
4,756,020	A	7/1988	Fodale
4,757,267	A	7/1988	Riskin
4,763,191	A	8/1988	Gordon et al.
4,763,317	A	8/1988	Lehman et al.
4,763,353	A	8/1988	Canale et al.
4,771,425	A	9/1988	Baran et al.
4,785,408	A	11/1988	Britton et al.
4,788,715	A	11/1988	Lee
4,811,382	A	3/1989	Sleevi
4,812,843	A	3/1989	Champion, III et al.
4,829,563	A	5/1989	Crockett et al.
4,831,518	A	5/1989	Yu et al.
4,852,001	A	7/1989	Tsushima et al.
4,866,756	A	9/1989	Crane et al.
4,881,261	A	11/1989	Oliphant et al.
4,893,328	A	1/1990	Peacock
4,896,345	A	1/1990	Thorne
4,897,866	A	1/1990	Majmudar et al.
4,908,850	A	3/1990	Masson et al.
4,924,488	A	5/1990	Kosich
4,943,995	A	7/1990	Daudelin et al.
4,953,204	A	8/1990	Cuschleg, Jr. et al.
4,972,461	A	11/1990	Brown et al.
4,994,985	A	2/1991	Cree et al.
5,001,710	A	3/1991	Gawrys et al.
5,008,930	A	4/1991	Gawrys et al.
5,017,917	A	5/1991	Fisher et al.
5,020,095	A	5/1991	Morganstein et al.
5,036,535	A	7/1991	Gechter et al.
5,058,152	A	10/1991	Solomon et al.
5,062,103	A	10/1991	Davidson et al.
5,073,890	A	12/1991	Danielsen
5,095,504	A	3/1992	Nishikawa et al.
5,117,225	A	5/1992	Wang
5,136,633	A	8/1992	Tejada et al.
5,155,761	A	10/1992	Hammond
5,164,983	A	11/1992	Brown et al.
5,168,515	A	12/1992	Gechter et al.
5,175,800	A	12/1992	Galis et al.
5,179,589	A	1/1993	Syu
5,181,236	A	1/1993	LaVallee et al.
5,181,239	A	1/1993	Jolissaint
5,185,782	A	2/1993	Srinivasan
5,202,828	A	4/1993	Vertelney et al.
5,206,903	A	4/1993	Kohler et al.
5,208,745	A	5/1993	Quentin et al.
5,212,727	A	5/1993	Ramkumar
5,214,688	A	5/1993	Szlam et al.
5,231,670	A	7/1993	Goldhor et al.
5,247,569	A	9/1993	Cave
5,249,223	A	9/1993	Vanacore
5,253,288	A	10/1993	Frey et al.
5,256,863	A	10/1993	Ferguson et al.
5,261,096	A	11/1993	Howarth
5,271,058	A	12/1993	Andrews et al.
5,274,635	A	12/1993	Rahman et al.
5,274,700	A	12/1993	Gechter et al.
5,274,782	A	12/1993	Chalasani et al.
5,278,898	A	1/1994	Cambray et al.
5,278,977	A	1/1994	Spencer et al.
5,280,625	A	1/1994	Howarter et al.
5,283,638	A	2/1994	Engberg et al.
5,283,856	A	2/1994	Gross et al.
5,285,494	A	2/1994	Sprecher et al.
5,288,147	A	2/1994	Schaefer et al.
5,291,550	A	3/1994	Levy et al.
5,291,551	A	3/1994	Conn et al.
5,291,552	A	3/1994	Kerrigan et al.
5,299,259	A	3/1994	Otto
5,299,260	A	3/1994	Shaio
5,301,320	A	4/1994	McAtee et al.
5,309,505	A	5/1994	Szlam et al.
5,311,574	A	5/1994	Livanos
5,311,583	A	5/1994	Friedes et al.
5,315,709	A	5/1994	Alston, Jr. et al.
5,327,486	A	7/1994	Wolff et al.
5,329,583	A	7/1994	Jurgensen et al.
5,333,266	A	7/1994	Boaz et al.
5,335,268	A	8/1994	Kelly, Jr. et al.
5,335,269	A	8/1994	Steinlicht
5,343,477	A	8/1994	Yamada
5,343,518	A	8/1994	Kneipp
5,355,474	A	10/1994	Thuraisngham et al.
5,359,649	A	10/1994	Rosu et al.
5,363,507	A	11/1994	Nakayama et al.
5,367,329	A	11/1994	Nakagaki et al.
5,369,695	A	11/1994	Chakravarti et al.
5,384,766	A	1/1995	Yamato et al.

(56) **References Cited**

U.S. PATENT DOCUMENTS

5,384,771 A 1/1995 Isidoro et al.
5,384,829 A 1/1995 Heileman, Jr. et al.
5,384,841 A 1/1995 Adams et al.
5,392,277 A 2/1995 Bernstein
5,392,328 A 2/1995 Schmidt et al.
5,392,345 A 2/1995 Otto
5,392,400 A 2/1995 Berkowitz et al.
5,402,474 A 3/1995 Miller et al.
5,414,762 A 5/1995 Flisik et al.
5,422,813 A 6/1995 Schuchman et al.
5,425,091 A 6/1995 Josephs
5,425,093 A 6/1995 Trefzger
5,426,594 A 6/1995 Wright et al.
5,428,608 A 6/1995 Freeman et al.
5,436,965 A 7/1995 Grossman et al.
5,436,967 A 7/1995 Hanson
5,440,719 A 8/1995 Hanes et al.
5,444,767 A 8/1995 Goetcheus et al.
5,444,774 A 8/1995 Friedes
5,444,823 A 8/1995 Nguyen
5,450,482 A 9/1995 Chen et al.
5,450,483 A 9/1995 Williams
5,452,350 A 9/1995 Reynolds et al.
5,455,903 A 10/1995 Jolissaint et al.
5,459,780 A 10/1995 Sand
5,463,685 A 10/1995 Gaechter et al.
5,465,286 A 11/1995 Clare et al.
5,467,391 A 11/1995 Donaghue, Jr. et al.
5,469,504 A 11/1995 Blaha
5,473,680 A 12/1995 Porter
5,475,813 A 12/1995 Cieslak et al.
5,479,487 A 12/1995 Hammond
5,481,616 A 1/1996 Freadman
5,488,648 A 1/1996 Womble
5,491,783 A 2/1996 Douglas et al.
5,493,564 A 2/1996 Mullan
5,495,522 A 2/1996 Allen et al.
5,495,523 A 2/1996 Stent et al.
5,496,392 A 3/1996 Sims et al.
5,497,317 A 3/1996 Hawkins et al.
5,497,371 A 3/1996 Ellis et al.
5,497,373 A 3/1996 Hulen et al.
5,500,891 A 3/1996 Harrington et al.
5,506,898 A 4/1996 Costantini et al.
5,509,062 A 4/1996 Carlsen
5,510,829 A 4/1996 Sugiyama et al.
5,511,117 A 4/1996 Zazzera
5,517,620 A 5/1996 Hashimoto et al.
5,519,773 A 5/1996 Dumas et al.
5,524,047 A 6/1996 Brown et al.
5,524,147 A 6/1996 Bean
5,526,353 A 6/1996 Henley et al.
5,528,678 A 6/1996 Kaplan
5,530,740 A 6/1996 Irribarren et al.
5,530,744 A 6/1996 Charalambous et al.
5,533,103 A 7/1996 Peavey et al.
5,533,107 A 7/1996 Irwin et al.
5,533,108 A 7/1996 Harris et al.
5,533,110 A 7/1996 Pinard et al.
5,533,115 A 7/1996 Hollenbach et al.
5,535,211 A 7/1996 Yano
5,535,256 A 7/1996 Maloney et al.
5,535,323 A 7/1996 Miller et al.
5,537,470 A 7/1996 Lee
5,537,630 A 7/1996 Berry et al.
5,539,811 A 7/1996 Nakamura et al.
5,544,220 A 8/1996 Trefzger
5,546,452 A 8/1996 Andrews et al.
5,550,816 A 8/1996 Hardwick et al.
5,553,133 A 9/1996 Perkins
5,555,299 A 9/1996 Maloney et al.
5,555,426 A 9/1996 Johnson et al.
5,557,667 A 9/1996 Bruno et al.
5,559,868 A 9/1996 Blonder
5,559,877 A 9/1996 Ash et al.
5,559,878 A 9/1996 Keys et al.
5,561,711 A 10/1996 Muller
5,561,841 A 10/1996 Markus
5,563,805 A 10/1996 Arbuckle et al.
5,563,937 A 10/1996 Bruno et al.
5,566,294 A 10/1996 Kojima et al.
5,570,419 A 10/1996 Cave et al.
5,570,420 A 10/1996 Bress et al.
5,572,579 A 11/1996 Orriss et al.
5,572,643 A 11/1996 Judson
5,577,100 A 11/1996 McGregor et al.
5,577,105 A 11/1996 Baum et al.
5,583,862 A 12/1996 Callon
5,583,922 A 12/1996 Davis et al.
5,590,188 A 12/1996 Crockett
5,592,542 A 1/1997 Honda et al.
5,592,543 A 1/1997 Smith et al.
5,594,791 A 1/1997 Szlam et al.
5,598,532 A 1/1997 Liron
5,604,737 A 2/1997 Iwami et al.
5,606,602 A 2/1997 Johnson et al.
5,608,778 A 3/1997 Partridge, III
5,608,786 A 3/1997 Gordon
5,610,910 A 3/1997 Focsaneanu et al.
5,617,570 A 4/1997 Russell et al.
5,619,183 A 4/1997 Ziegra et al.
5,619,557 A 4/1997 Van Berkum
5,619,648 A 4/1997 Canale et al.
5,621,789 A 4/1997 McCalmont et al.
5,621,790 A 4/1997 Grossman et al.
5,623,600 A 4/1997 Ji et al.
5,624,265 A 4/1997 Redford et al.
5,625,404 A 4/1997 Grady et al.
5,625,676 A 4/1997 Greco et al.
5,625,682 A 4/1997 Gray et al.
5,627,764 A 5/1997 Schutzman et al.
5,627,884 A 5/1997 Williams et al.
5,630,127 A 5/1997 Moore et al.
5,632,011 A 5/1997 Landfield et al.
5,633,920 A 5/1997 Kikinis et al.
5,633,924 A 5/1997 Kaish et al.
5,635,918 A 6/1997 Tett
5,640,445 A 6/1997 David
5,642,411 A 6/1997 Theis
5,642,477 A 6/1997 de Carmo et al.
5,642,511 A 6/1997 Chow et al.
5,644,720 A 7/1997 Boll et al.
5,646,981 A 7/1997 Klein
5,649,105 A 7/1997 Aldred et al.
5,652,789 A 7/1997 Miner et al.
5,652,791 A 7/1997 Sunderman et al.
5,654,961 A 8/1997 Araujo et al.
5,655,015 A 8/1997 Walsh et al.
5,657,383 A 8/1997 Gerber et al.
5,659,542 A 8/1997 Bell et al.
5,659,604 A 8/1997 Beckmann
5,659,746 A 8/1997 Bankert et al.
5,673,304 A 9/1997 Connor et al.
5,673,311 A 9/1997 Andruska et al.
5,673,322 A 9/1997 Pepe et al.
5,675,637 A 10/1997 Szlam et al.
5,684,870 A 11/1997 Maloney et al.
5,689,229 A 11/1997 Chaco et al.
5,692,033 A 11/1997 Farris
5,696,809 A 12/1997 Voit
5,696,811 A 12/1997 Maloney et al.
5,701,400 A 12/1997 Amado
5,703,943 A 12/1997 Otto
5,706,453 A 1/1998 Cheng et al.
5,708,702 A 1/1998 De Paul et al.
5,712,901 A 1/1998 Meermans
5,715,306 A 2/1998 Sunderman et al.
5,715,307 A 2/1998 Zazzera
5,715,432 A 2/1998 Xu et al.
5,717,747 A 2/1998 Boyle, III et al.
5,721,770 A 2/1998 Kohler
5,724,412 A 3/1998 Srinivasan
5,724,418 A 3/1998 Brady
5,726,984 A 3/1998 Kubler et al.

(56) **References Cited**

U.S. PATENT DOCUMENTS

5,727,159 A 3/1998 Kikinis
5,729,594 A 3/1998 Klingman
5,732,078 A 3/1998 Arango
5,734,981 A 3/1998 Kennedy, III et al.
5,737,495 A 4/1998 Adams et al.
5,737,595 A 4/1998 Cohen et al.
5,737,726 A 4/1998 Cameron et al.
5,737,727 A 4/1998 Lehmann et al.
5,740,238 A 4/1998 Flockhart et al.
5,740,240 A 4/1998 Jolissaint
5,742,668 A 4/1998 Pepe et al.
5,742,670 A 4/1998 Bennett
5,742,675 A 4/1998 Kilander et al.
5,742,905 A 4/1998 Pepe et al.
5,745,687 A 4/1998 Randell
5,745,878 A 4/1998 Hashimoto et al.
5,748,884 A 5/1998 Royce et al.
5,748,907 A 5/1998 Crane
5,751,706 A 5/1998 Land et al.
5,751,707 A 5/1998 Voit et al.
5,751,795 A 5/1998 Hassler et al.
5,752,059 A 5/1998 Holleran et al.
5,752,244 A 5/1998 Rose et al.
5,752,246 A 5/1998 Rogers et al.
5,754,111 A 5/1998 Garcia
5,754,636 A 5/1998 Bayless et al.
5,754,639 A 5/1998 Flockhart et al.
5,754,655 A 5/1998 Hughes et al.
5,757,904 A 5/1998 Anderson
5,760,823 A 6/1998 Brunson et al.
5,761,289 A 6/1998 Keshav
5,764,736 A 6/1998 Shachar et al.
5,764,898 A 6/1998 Tsuji et al.
5,765,033 A 6/1998 Miloslavsky
5,768,360 A 6/1998 Reynolds et al.
5,768,527 A 6/1998 Zhu et al.
5,774,583 A 6/1998 Sasaki et al.
5,778,060 A 7/1998 Otto
5,778,178 A 7/1998 Arunachalam
5,778,377 A 7/1998 Marlin et al.
5,784,438 A 7/1998 Martinez
5,784,451 A 7/1998 Smith, Jr.
5,784,452 A 7/1998 Carney
5,787,160 A 7/1998 Chaney et al.
5,787,163 A 7/1998 Taylor et al.
5,790,635 A 8/1998 Dezonno
5,790,650 A 8/1998 Dunn et al.
5,790,789 A 8/1998 Suarez
5,790,798 A 8/1998 Beckett, II et al.
5,793,857 A 8/1998 Barnes et al.
5,793,861 A 8/1998 Haigh
5,794,039 A 8/1998 Guck
5,796,398 A 8/1998 Zimmer
5,796,729 A 8/1998 Greaney et al.
5,796,791 A 8/1998 Polcyn
5,796,813 A 8/1998 Sonnenberg
5,799,067 A 8/1998 Kikinis et al.
5,799,297 A 8/1998 Goodridge et al.
5,802,163 A 9/1998 Miloslavsky
5,802,253 A 9/1998 Gross et al.
5,802,283 A 9/1998 Grady et al.
5,802,314 A 9/1998 Tullis et al.
5,802,316 A 9/1998 Ito et al.
5,802,493 A 9/1998 Sheflott et al.
5,802,526 A 9/1998 Fawcett et al.
5,805,587 A 9/1998 Norris et al.
5,806,061 A 9/1998 Chaudhuri et al.
5,809,128 A 9/1998 McMullin
5,809,282 A 9/1998 Cooper et al.
5,809,512 A 9/1998 Kato
5,812,795 A 9/1998 Horovitz et al.
5,813,014 A 9/1998 Gustman
5,815,566 A 9/1998 Ramot et al.
5,818,935 A 10/1998 Maa
5,822,306 A 10/1998 Catchpole
5,822,400 A 10/1998 Smith
5,822,404 A 10/1998 Cave
5,822,526 A 10/1998 Waskiewicz
5,825,775 A 10/1998 Chin et al.
5,825,862 A 10/1998 Voit et al.
5,825,869 A 10/1998 Brooks et al.
5,825,870 A 10/1998 Miloslavsky
5,826,040 A 10/1998 Fargher et al.
5,826,269 A 10/1998 Hussey
5,828,747 A 10/1998 Fisher et al.
5,828,839 A 10/1998 Moncreiff
5,831,611 A 11/1998 Kennedy et al.
5,832,196 A 11/1998 Croslin et al.
5,835,090 A 11/1998 Clark et al.
5,835,583 A 11/1998 Hetz et al.
5,838,682 A 11/1998 Dekelbaum et al.
5,838,768 A 11/1998 Sumar et al.
5,838,774 A 11/1998 Weisser, Jr.
5,841,854 A 11/1998 Schumacher et al.
5,842,131 A 11/1998 Yamane
5,844,980 A 12/1998 Patel et al.
5,844,982 A 12/1998 Knitl
5,847,484 A 12/1998 Kuyama et al.
5,848,131 A 12/1998 Shaffer et al.
5,848,143 A * 12/1998 Andrews et al. 379/265.09
5,850,433 A 12/1998 Rondeau
5,852,814 A 12/1998 Allen
5,857,184 A 1/1999 Lynch
5,862,134 A 1/1999 Deng
5,862,211 A 1/1999 Roush
5,862,223 A 1/1999 Walker et al.
5,864,616 A 1/1999 Hartmeier
5,864,848 A 1/1999 Horvitz et al.
5,867,484 A 2/1999 Shaunfield
5,867,494 A 2/1999 Krishnaswamy et al.
5,867,495 A 2/1999 Elliott et al.
5,867,559 A 2/1999 Jorgensen et al.
5,867,562 A 2/1999 Scherer
5,867,822 A 2/1999 Sankar
5,870,464 A 2/1999 Brewster et al.
5,870,549 A 2/1999 Bobo, II
5,872,841 A 2/1999 King et al.
5,872,926 A 2/1999 Levac et al.
5,873,032 A 2/1999 Cox et al.
5,873,040 A 2/1999 Dunn et al.
5,873,076 A 2/1999 Barr et al.
5,878,126 A 3/1999 Velamuri et al.
5,878,130 A 3/1999 Andrews et al.
5,878,230 A 3/1999 Weber et al.
5,881,146 A 3/1999 Hamilton
5,883,891 A 3/1999 Williams et al.
5,884,032 A 3/1999 Bateman et al.
5,884,262 A 3/1999 Wise et al.
5,887,173 A 3/1999 Ogawa et al.
5,889,474 A 3/1999 LaDue
5,889,774 A 3/1999 Mirashrafi et al.
5,889,799 A 3/1999 Grossman et al.
5,889,863 A 3/1999 Weber
5,892,764 A 4/1999 Riemann et al.
5,892,822 A 4/1999 Gottlieb et al.
5,893,912 A 4/1999 Freund et al.
5,894,512 A 4/1999 Zenner
5,896,444 A 4/1999 Perlman et al.
5,897,635 A 4/1999 Torres et al.
5,901,138 A 5/1999 Bader et al.
5,901,203 A 5/1999 Morganstein et al.
5,901,209 A 5/1999 Tannenbaum et al.
5,903,631 A 5/1999 Smith et al.
5,903,877 A 5/1999 Berkowitz et al.
5,905,495 A 5/1999 Tanaka et al.
5,905,792 A 5/1999 Miloslavsky
5,905,793 A 5/1999 Flockhart et al.
5,905,863 A 5/1999 Knowles et al.
5,907,547 A 5/1999 Foladare et al.
5,911,134 A 6/1999 Castonguay et al.
5,911,776 A 6/1999 Guck
5,914,941 A 6/1999 Janky
5,915,001 A 6/1999 Uppaluru
5,915,008 A 6/1999 Dulman

(56) **References Cited**

U.S. PATENT DOCUMENTS

5,915,011	A		6/1999	Miloslavsky
5,915,012	A		6/1999	Miloslavsky
5,916,302	A		6/1999	Dunn et al.
5,917,817	A		6/1999	Dunn et al.
5,917,898	A		6/1999	Bassa et al.
5,918,213	A		6/1999	Bernard et al.
5,920,621	A		7/1999	Gottlieb
5,920,719	A		7/1999	Sutton et al.
5,920,865	A		7/1999	Ariga
5,923,745	A		7/1999	Hurd
5,923,879	A		7/1999	Sasmazel et al.
5,926,535	A		7/1999	Reynolds
5,926,538	A		7/1999	Deryugin et al.
5,926,539	A		7/1999	Shtivelman
5,933,492	A		8/1999	Turovski
5,937,051	A		8/1999	Hurd et al.
5,937,057	A		8/1999	Bell et al.
5,937,162	A		8/1999	Funk et al.
5,937,388	A		8/1999	Davis et al.
5,938,725	A		8/1999	Hara
5,940,075	A		8/1999	Mutschler, III et al.
5,940,478	A		8/1999	Vaudreuil et al.
5,940,479	A		8/1999	Guy et al.
5,940,488	A		8/1999	DeGrazia et al.
5,940,495	A		8/1999	Bondarenko et al.
5,940,496	A		8/1999	Gisby et al.
5,940,497	A		8/1999	Miloslavsky
5,940,598	A		8/1999	Strauss et al.
5,940,823	A		8/1999	Schreiber et al.
5,943,416	A		8/1999	Gisby
5,946,375	A		8/1999	Pattison et al.
5,946,386	A	*	8/1999	Rogers et al. 379/265.09
5,946,387	A		8/1999	Miloslavsky
5,948,054	A		9/1999	Nielsen
5,949,988	A		9/1999	Feisullin et al.
5,953,332	A		9/1999	Miloslavsky
5,953,405	A		9/1999	Miloslavsky
5,953,406	A		9/1999	LaRue et al.
5,956,482	A		9/1999	Agraharam et al.
5,956,729	A		9/1999	Goetz et al.
5,958,014	A		9/1999	Cave
5,958,016	A		9/1999	Chang et al.
5,958,064	A		9/1999	Judd et al.
5,959,982	A		9/1999	Federkins et al.
5,960,073	A		9/1999	Kikinis et al.
5,960,411	A		9/1999	Hartman et al.
5,963,632	A		10/1999	Miloslavsky
5,963,635	A		10/1999	Szlam et al.
5,966,427	A		10/1999	Shaffer et al.
5,966,695	A		10/1999	Melchione et al.
5,970,065	A		10/1999	Miloslavsky
5,970,134	A		10/1999	Highland et al.
5,974,135	A		10/1999	Breneman et al.
5,974,414	A		10/1999	Stanczak et al.
5,974,448	A		10/1999	Yamauchi et al.
RE36,416	E		11/1999	Szlam et al.
5,978,465	A		11/1999	Corduroy et al.
5,978,467	A		11/1999	Walker et al.
5,978,672	A		11/1999	Hartmaier et al.
5,978,836	A		11/1999	Ouchi
5,982,774	A		11/1999	Foladare et al.
5,982,870	A		11/1999	Pershan et al.
5,982,873	A		11/1999	Flockhart et al.
5,983,218	A		11/1999	Syeda-Mahmood
5,987,102	A		11/1999	Elliott et al.
5,987,117	A		11/1999	McNeil et al.
5,987,118	A		11/1999	Dickerman et al.
5,987,423	A		11/1999	Arnold et al.
5,987,446	A		11/1999	Corey et al.
5,991,365	A		11/1999	Pizano et al.
5,991,390	A		11/1999	Booton
5,991,391	A		11/1999	Miloslavsky
5,991,392	A		11/1999	Miloslavsky
5,991,393	A		11/1999	Kamen
5,991,394	A		11/1999	Dezonno et al.
5,991,395	A		11/1999	Miloslavsky
5,995,606	A		11/1999	Civanlar et al.
5,995,614	A		11/1999	Miloslavsky
5,995,615	A		11/1999	Miloslavsky
5,996,000	A		11/1999	Shuster
5,999,525	A		12/1999	Krishnaswamy et al.
5,999,609	A		12/1999	Nishimura
5,999,965	A	*	12/1999	Kelly 709/202
6,002,396	A		12/1999	Davies
6,002,760	A		12/1999	Gisby
6,003,034	A		12/1999	Tuli
6,005,845	A		12/1999	Svennesson et al.
6,005,920	A		12/1999	Fuller et al.
6,005,931	A		12/1999	Neyman et al.
6,009,163	A		12/1999	Nabkel et al.
6,011,792	A		1/2000	Miloslavsky
6,011,844	A		1/2000	Uppaluru et al.
6,011,974	A		1/2000	Cedervall et al.
6,012,152	A		1/2000	Douik et al.
6,014,137	A		1/2000	Burns
6,014,138	A		1/2000	Cain et al.
6,014,379	A		1/2000	White et al.
6,014,437	A		1/2000	Acker et al.
6,014,647	A		1/2000	Nizzari et al.
6,018,578	A		1/2000	Bondarenko et al.
6,018,579	A		1/2000	Petrunka
6,018,761	A		1/2000	Uomini
6,021,262	A		2/2000	Cote et al.
6,021,411	A		2/2000	Brophy et al.
6,021,428	A		2/2000	Miloslavsky
6,023,684	A		2/2000	Pearson
6,023,723	A		2/2000	McCormick et al.
6,026,087	A		2/2000	Mirashrafi et al.
6,026,375	A		2/2000	Hall et al.
6,028,917	A		2/2000	Creamer et al.
6,029,195	A		2/2000	Herz
6,038,293	A		3/2000	McNerney et al.
6,038,537	A		3/2000	Matsuoka
6,041,116	A		3/2000	Meyers
6,044,144	A		3/2000	Becker et al.
6,044,146	A		3/2000	Gisby et al.
6,044,368	A		3/2000	Powers
6,046,762	A		4/2000	Sonesh et al.
6,047,060	A		4/2000	Fedorov et al.
6,049,272	A		4/2000	Lee et al.
6,049,547	A		4/2000	Fisher et al.
6,049,779	A		4/2000	Berkson
6,052,514	A		4/2000	Gill et al.
6,055,307	A		4/2000	Behnke et al.
6,055,308	A		4/2000	Miloslavsky et al.
6,055,513	A		4/2000	Katz et al.
6,058,163	A		5/2000	Pattison et al.
6,058,389	A		5/2000	Chandra et al.
6,058,435	A		5/2000	Sassin et al.
6,061,054	A		5/2000	Jolly
6,064,667	A		5/2000	Gisby et al.
6,064,722	A		5/2000	Clise et al.
6,064,723	A		5/2000	Cohn et al.
6,064,730	A		5/2000	Ginsberg
6,064,973	A		5/2000	Smith et al.
6,067,357	A		5/2000	Kishinsky et al.
6,069,890	A		5/2000	White et al.
6,070,142	A		5/2000	McDonough et al.
6,070,144	A		5/2000	Ginsberg et al.
6,072,864	A		6/2000	Shtivelman et al.
6,073,013	A		6/2000	Agre et al.
6,073,105	A		6/2000	Sutcliffe et al.
6,073,109	A		6/2000	Flores et al.
6,073,124	A		6/2000	Krishnan et al.
6,075,783	A		6/2000	Voit
6,075,843	A		6/2000	Cave
6,076,101	A		6/2000	Kamakura et al.
6,076,105	A		6/2000	Wolff et al.
6,078,581	A		6/2000	Shtivelman et al.
6,078,583	A		6/2000	Takahara et al.
6,081,291	A		6/2000	Ludwig, Jr.
6,081,591	A		6/2000	Skoog
6,081,592	A		6/2000	Battle
6,085,097	A		7/2000	Savery et al.

(56) **References Cited**

U.S. PATENT DOCUMENTS

6,085,201	A	7/2000	Tso
6,088,340	A	7/2000	Buchholz et al.
6,088,696	A	7/2000	Moon et al.
6,088,717	A	7/2000	Reed et al.
6,094,479	A	7/2000	Lindeberg et al.
6,094,673	A	7/2000	Dilip et al.
6,097,804	A	8/2000	Gilbert et al.
6,097,938	A	8/2000	Paxson
6,098,065	A	8/2000	Skillen et al.
6,104,711	A	8/2000	Voit
6,104,800	A	8/2000	Benson
6,104,801	A	8/2000	Miloslavsky
6,104,802	A	8/2000	Perlmutter
6,108,688	A	8/2000	Nielsen
6,108,711	A	8/2000	Beck et al.
6,112,085	A	8/2000	Garner et al.
6,115,596	A	9/2000	Raith et al.
6,115,742	A	9/2000	Franklin et al.
6,118,865	A	9/2000	Gisby
6,119,155	A	9/2000	Rossmann et al.
6,119,167	A	9/2000	Boyle et al.
6,122,360	A	9/2000	Neyman et al.
6,122,364	A	9/2000	Petrunka et al.
6,122,365	A	9/2000	Yegoshin
6,122,632	A	9/2000	Botts et al.
6,125,113	A	9/2000	Farris et al.
6,125,126	A	9/2000	Hallenst
6,128,379	A	10/2000	Smyk
6,128,482	A	10/2000	Nixon et al.
6,128,603	A	10/2000	Dent et al.
6,128,646	A	10/2000	Miloslavsky
6,130,933	A	10/2000	Miloslavsky
6,134,217	A	10/2000	Stiliadis et al.
6,134,235	A	10/2000	Goldman et al.
6,134,315	A	10/2000	Galvin
6,134,318	A	10/2000	O'Neil
6,134,530	A	10/2000	Bunting et al.
6,137,870	A	10/2000	Scherer
6,138,139	A	10/2000	Beck et al.
6,141,345	A	10/2000	Goeddel et al.
6,148,074	A	11/2000	Miloslavsky et al.
6,157,653	A	12/2000	Kline et al.
6,157,655	A	12/2000	Shtivelman
6,157,924	A	12/2000	Austin
6,166,735	A	12/2000	Dom et al.
6,167,255	A	12/2000	Kennedy, III et al.
6,167,395	A	12/2000	Beck et al.
6,167,404	A	12/2000	Morcos et al.
6,170,011	B1	1/2001	MacLeod et al.
6,173,052	B1	1/2001	Brady
6,173,316	B1	1/2001	De Boor et al.
6,175,562	B1	1/2001	Cave
6,175,563	B1	1/2001	Miloslavsky
6,175,564	B1	1/2001	Miloslavsky et al.
6,175,620	B1	1/2001	Rouge et al.
6,175,842	B1	1/2001	Kirk et al.
6,178,239	B1	1/2001	Kishinsky et al.
6,181,336	B1	1/2001	Chiu et al.
6,181,736	B1	1/2001	McLaughlin et al.
6,181,788	B1	1/2001	Miloslavsky
6,182,059	B1	1/2001	Angotti et al.
6,182,249	B1	1/2001	Wookey et al.
6,185,287	B1	2/2001	Miloslavsky
6,185,291	B1	2/2001	Miloslavsky
6,185,292	B1	2/2001	Miloslavsky
6,185,427	B1	2/2001	Krasner et al.
6,185,535	B1	2/2001	Hedin et al.
6,188,688	B1	2/2001	Buskirk, Jr.
6,192,250	B1	2/2001	Buskens et al.
6,195,357	B1	2/2001	Polcyn
6,198,738	B1	3/2001	Chang et al.
6,198,739	B1	3/2001	Neyman et al.
6,201,804	B1	3/2001	Kikinis
6,201,863	B1	3/2001	Miloslavsky
6,205,135	B1	3/2001	Chinni et al.
6,205,412	B1	3/2001	Barskyy
6,212,178	B1	4/2001	Beck et al.
6,215,783	B1	4/2001	Neyman
6,219,045	B1	4/2001	Leahy et al.
6,219,413	B1	4/2001	Burg
6,222,919	B1	4/2001	Hollatz et al.
6,226,285	B1	5/2001	Kozdon et al.
6,229,524	B1	5/2001	Chernock et al.
6,229,888	B1	5/2001	Miloslavsky
6,230,197	B1	5/2001	Beck et al.
6,233,234	B1	5/2001	Curry et al.
6,233,616	B1	5/2001	Reid
6,236,857	B1	5/2001	Calabrese et al.
6,240,285	B1	5/2001	Blum et al.
6,243,092	B1	6/2001	Okita et al.
6,243,373	B1	6/2001	Turock
6,243,375	B1	6/2001	Speicher
6,243,379	B1	6/2001	Veerina et al.
6,243,713	B1	6/2001	Nelson et al.
6,249,807	B1	6/2001	Shaw et al.
6,253,129	B1	6/2001	Jenkins et al.
6,256,489	B1	7/2001	Lichter et al.
6,256,503	B1	7/2001	Stephens
6,259,692	B1	7/2001	Shtivelman et al.
6,259,774	B1	7/2001	Miloslavsky
6,259,786	B1	7/2001	Gisby
6,263,049	B1	7/2001	Kuhn
6,263,065	B1	7/2001	Durinovic-Johri et al.
6,263,066	B1	7/2001	Shtivelman et al.
6,263,359	B1	7/2001	Fong et al.
6,275,693	B1	8/2001	Lin et al.
6,278,996	B1	8/2001	Richardson et al.
6,282,429	B1	8/2001	Baiyor et al.
6,282,565	B1	8/2001	Shaw et al.
6,285,316	B1	9/2001	Nir et al.
6,285,364	B1	9/2001	Giordano, III et al.
6,286,033	B1	9/2001	Kishinsky et al.
6,286,084	B1	9/2001	Wexler et al.
6,286,129	B1	9/2001	Agarwal et al.
6,289,094	B1	9/2001	Miloslavsky
6,292,181	B1	9/2001	Banerjee et al.
6,292,553	B1 *	9/2001	Fellingham et al. 379/221.02
6,295,353	B1	9/2001	Flockhart et al.
6,295,530	B1	9/2001	Ritchie et al.
6,298,041	B1	10/2001	Packer
6,301,480	B1	10/2001	Kennedy, III et al.
6,304,898	B1	10/2001	Shiigi
6,314,089	B1	11/2001	Szlam et al.
6,314,430	B1	11/2001	Chang
6,320,857	B1	11/2001	Tonnby et al.
6,320,951	B1	11/2001	Shtivelman et al.
6,324,276	B1	11/2001	Uppaluru et al.
6,330,323	B1	12/2001	Gottlieb et al.
6,330,426	B2	12/2001	Brown et al.
6,332,022	B1	12/2001	Martinez
6,332,154	B2	12/2001	Beck et al.
6,332,163	B1	12/2001	Bowman-Amuah
6,333,980	B1	12/2001	Hollatz et al.
6,335,927	B1	1/2002	Elliott et al.
6,337,904	B1	1/2002	Gisby
6,339,593	B1	1/2002	Kikinis
6,343,281	B1	1/2002	Kato
6,345,290	B2	2/2002	Okada et al.
6,345,300	B1	2/2002	Bakshi et al.
6,345,305	B1	2/2002	Beck et al.
6,346,952	B1	2/2002	Shtivelman
6,347,085	B2	2/2002	Kelly
6,353,608	B1	3/2002	Cullers et al.
6,353,667	B1	3/2002	Foster et al.
6,359,981	B1	3/2002	Neyman et al.
6,362,838	B1	3/2002	Szlam et al.
6,363,411	B1	3/2002	Dugan et al.
6,366,575	B1	4/2002	Barkan et al.
6,366,586	B1	4/2002	Christie
6,366,651	B1	4/2002	Griffith et al.
6,366,658	B1	4/2002	Bjornberg et al.
6,366,925	B1	4/2002	Meltzer et al.
6,370,238	B1	4/2002	Sansone et al.
6,370,508	B2	4/2002	Beck et al.

(56) **References Cited**

U.S. PATENT DOCUMENTS

6,370,567 B1 4/2002 Ouchi
6,373,836 B1 4/2002 Deryugin et al.
6,373,937 B1 4/2002 Yegoshin
6,377,568 B1 4/2002 Kelly
6,377,583 B1 4/2002 Lyles et al.
6,377,944 B1 4/2002 Busey et al.
6,377,975 B1 4/2002 Florman
6,381,640 B1 4/2002 Beck et al.
6,385,191 B1 * 5/2002 Coffman et al. 370/352
6,385,202 B1 5/2002 Katseff et al.
6,385,646 B1 5/2002 Brown et al.
6,389,007 B1 5/2002 Shenkman et al.
6,389,133 B1 5/2002 Kamen
6,393,018 B2 5/2002 Miloslavsky
6,393,122 B1 5/2002 Belzile
6,393,481 B1 5/2002 Deo et al.
6,396,834 B1 5/2002 Bonomi et al.
6,396,919 B1 5/2002 Shimada et al.
6,400,725 B1 6/2002 Ross
6,401,094 B1 6/2002 Stemp et al.
6,405,033 B1 6/2002 Kennedy, III et al.
6,407,996 B1 6/2002 Witchalls
6,407,999 B1 6/2002 Olkkonen et al.
6,408,064 B1 6/2002 Fedorov et al.
6,411,806 B1 6/2002 Garner et al.
6,418,146 B1 7/2002 Miloslavsky
6,418,199 B1 7/2002 Perrone
6,424,709 B1 7/2002 Doyle et al.
6,427,002 B2 7/2002 Campbell et al.
6,430,174 B1 8/2002 Jennings et al.
6,430,282 B1 8/2002 Bannister et al.
6,434,231 B2 8/2002 Neyman et al.
6,434,530 B1 8/2002 Sloane et al.
6,434,549 B1 8/2002 Linetsky et al.
6,442,242 B1 8/2002 McAllister et al.
6,442,247 B1 8/2002 Garcia
6,445,788 B1 9/2002 Torba
6,449,260 B1 9/2002 Sassin et al.
6,449,270 B1 9/2002 Miloslavsky
6,449,358 B1 9/2002 Anisimov et al.
6,449,646 B1 9/2002 Sikora et al.
6,452,609 B1 9/2002 Katinsky et al.
6,453,038 B1 9/2002 McFarlane et al.
6,453,341 B1 9/2002 Miloslavsky
6,456,615 B1 9/2002 Kikinis
6,456,619 B1 9/2002 Sassin et al.
6,459,697 B1 10/2002 Neyman
6,463,148 B1 10/2002 Brady
6,470,010 B1 10/2002 Szviatovszki et al.
6,470,080 B2 10/2002 Perlmutter
6,473,787 B2 10/2002 Miloslavsky
6,480,600 B1 11/2002 Neyman et al.
6,487,663 B1 11/2002 Jaisimha et al.
6,490,350 B2 12/2002 McDuff et al.
6,493,447 B1 12/2002 Goss et al.
6,496,567 B1 12/2002 Bjornberg et al.
6,496,702 B1 12/2002 Lockhart
6,496,981 B1 12/2002 Wistendahl et al.
6,498,897 B1 12/2002 Nelson et al.
6,499,088 B1 12/2002 Wexler et al.
6,512,825 B1 1/2003 Lindholm et al.
6,515,996 B1 2/2003 Tonnby et al.
6,519,617 B1 2/2003 Wanderski et al.
6,532,493 B1 3/2003 Aviani, Jr. et al.
6,535,492 B2 3/2003 Shtivelman
6,536,043 B1 3/2003 Guedalia
6,539,419 B2 3/2003 Beck et al.
6,546,405 B2 4/2003 Gupta et al.
6,549,539 B1 4/2003 Neyman
6,553,114 B1 4/2003 Fisher et al.
6,554,183 B1 4/2003 Sticha et al.
6,560,328 B1 5/2003 Bondarenko et al.
6,560,329 B1 5/2003 Draginich et al.
6,563,788 B1 5/2003 Torba et al.
6,581,105 B2 6/2003 Miloslavsky et al.
6,594,269 B1 7/2003 Polcyn
6,597,685 B2 7/2003 Miloslavsky et al.
6,600,733 B2 7/2003 Deng
6,600,822 B2 7/2003 Kamen
6,603,762 B1 8/2003 Kikinis
6,611,498 B1 8/2003 Baker et al.
6,611,590 B1 8/2003 Lu et al.
6,614,780 B2 9/2003 Hakim et al.
6,625,139 B2 9/2003 Miloslavsky et al.
6,628,666 B1 9/2003 Pickering et al.
6,631,399 B1 10/2003 Stanczak et al.
6,633,910 B1 10/2003 Rajan et al.
6,650,747 B1 11/2003 Bala et al.
6,651,085 B1 11/2003 Woods
6,668,286 B2 * 12/2003 Noble et al. 710/6
6,678,718 B1 * 1/2004 Khouri et al. 709/204
6,681,010 B1 1/2004 Anderson et al.
6,687,241 B1 2/2004 Goss
6,693,893 B1 * 2/2004 Ehlinger 370/352
6,704,409 B1 3/2004 Dilip et al.
6,704,410 B1 3/2004 McFarlane et al.
6,704,411 B1 3/2004 Nishidate
6,707,903 B2 3/2004 Burok et al.
6,711,249 B2 3/2004 Weissman et al.
6,711,611 B2 3/2004 Hanhan
6,714,643 B1 3/2004 Gargeya et al.
6,718,032 B1 4/2004 Vrenjak et al.
6,718,366 B2 4/2004 Beck et al.
6,721,306 B1 4/2004 Farris et al.
6,731,626 B1 5/2004 Neyman
6,735,298 B2 5/2004 Neyman et al.
6,744,877 B1 6/2004 Edwards
6,744,878 B1 6/2004 Komissarchik et al.
6,748,211 B1 6/2004 Isaac et al.
6,751,210 B1 6/2004 Shaffer et al.
6,753,784 B1 6/2004 Sznaider et al.
6,754,181 B1 6/2004 Elliott et al.
6,760,322 B1 7/2004 Fukuda et al.
6,760,324 B1 7/2004 Scott et al.
6,760,428 B2 7/2004 Foster
6,760,727 B1 7/2004 Schroeder et al.
6,763,104 B1 7/2004 Judkins et al.
6,763,369 B1 7/2004 Ytuarte et al.
6,771,765 B1 8/2004 Crowther et al.
6,778,527 B1 * 8/2004 Amin 370/352
6,785,375 B1 8/2004 Beddus et al.
6,785,710 B2 8/2004 Kikinis
6,785,740 B1 8/2004 Yoneda et al.
6,788,779 B2 9/2004 Ostapchuck
6,798,771 B1 9/2004 Low et al.
6,801,520 B2 10/2004 Philonenko
6,801,928 B2 10/2004 Nuestro
6,804,346 B1 10/2004 Mewhinney
6,816,871 B2 11/2004 Lee
6,816,878 B1 11/2004 Zimmers et al.
6,845,154 B1 1/2005 Cave et al.
6,847,715 B1 1/2005 Swartz
6,847,825 B1 1/2005 Duvall et al.
6,850,602 B1 2/2005 Chou
6,859,529 B2 2/2005 Duncan et al.
6,865,267 B2 3/2005 Dezonno
6,868,391 B1 3/2005 Hultgren
6,874,119 B2 3/2005 MacLeod et al.
6,876,632 B1 4/2005 Takeda
6,879,586 B2 4/2005 Turovsky et al.
6,882,996 B2 4/2005 Preisig et al.
6,898,190 B2 5/2005 Shtivelman et al.
6,903,685 B1 6/2005 Arndt et al.
6,907,455 B1 6/2005 Wolfe et al.
6,910,072 B2 6/2005 MacLeod et al.
6,912,272 B2 6/2005 Kirk et al.
6,922,411 B1 7/2005 Taylor
6,922,689 B2 7/2005 Shtivelman
6,934,379 B2 8/2005 Falcon et al.
6,934,381 B1 * 8/2005 Klein et al. 379/265.09
6,944,272 B1 9/2005 Thomas
6,958,994 B2 10/2005 Zhakov et al.
6,965,914 B2 11/2005 Dowling
6,970,844 B1 11/2005 Bierenbaum

(56) **References Cited**

U.S. PATENT DOCUMENTS

6,977,740	B1	12/2005	Mandalia
6,981,020	B2	12/2005	Miloslavsky et al.
6,985,478	B2	1/2006	Pogossiants et al.
6,985,943	B2	1/2006	Deryugin et al.
6,987,977	B2	1/2006	Lockhart
6,996,603	B1	2/2006	Srinivasan
7,020,264	B1	3/2006	Neyman et al.
7,031,442	B1	4/2006	Neyman et al.
7,039,176	B2	5/2006	Borodow et al.
7,039,857	B2	5/2006	Beck et al.
7,076,048	B2	7/2006	Lee et al.
7,079,641	B2	7/2006	Ostapchuck
7,080,092	B2	7/2006	Upton
7,088,814	B1	8/2006	Shaffer et al.
7,092,509	B1	8/2006	Mears et al.
7,106,850	B2	9/2006	Campbell et al.
7,110,523	B2	9/2006	Gagle et al.
7,110,525	B1	9/2006	Heller et al.
7,117,244	B2	10/2006	Florman et al.
7,120,700	B2	10/2006	MacLeod et al.
7,127,400	B2	10/2006	Koch
7,133,830	B1	11/2006	Hoban et al.
7,136,475	B1	11/2006	Rogers et al.
7,155,496	B2	12/2006	Froyd et al.
7,155,512	B2	12/2006	Lean et al.
7,159,224	B2	1/2007	Sharma et al.
7,167,924	B1	1/2007	Symonds et al.
7,184,747	B2	2/2007	Bogat
7,216,350	B2	5/2007	Martin et al.
7,221,377	B1	5/2007	Okita et al.
7,222,301	B2	5/2007	Makagon et al.
7,231,032	B2	6/2007	Nevman et al.
7,236,486	B2	6/2007	Baker et al.
7,236,584	B2	6/2007	Torba
7,242,760	B2	7/2007	Shires
7,246,009	B2	7/2007	Hamblen et al.
7,254,219	B1	8/2007	Hansen et al.
7,254,641	B2	8/2007	Broughton et al.
7,263,372	B2	8/2007	Lockhart
7,263,671	B2	8/2007	Hull et al.
7,269,263	B2	9/2007	Dedieu et al.
7,272,627	B2	9/2007	Petrovykh
7,277,536	B2	10/2007	Ostapchuk
7,277,916	B2	10/2007	Nuestro
7,283,519	B2	10/2007	Girard
7,336,649	B1	2/2008	Huang
7,363,228	B2	4/2008	Wyss et al.
7,372,956	B1	5/2008	Kikinis et al.
7,373,405	B2	5/2008	Deryugin et al.
7,373,410	B2	5/2008	Monza et al.
7,376,227	B2	5/2008	Anisimov et al.
7,376,431	B2	5/2008	Niedermeyer
7,401,112	B1	7/2008	Matz et al.
7,415,009	B2	8/2008	Neyman
7,418,094	B2	8/2008	Golitsin et al.
7,428,303	B2	9/2008	Campbell et al.
7,434,204	B1	10/2008	Everingham et al.
7,460,496	B2	12/2008	Miloslavsky et al.
7,496,640	B2	2/2009	Hanhan
7,535,479	B2	5/2009	Okita et al.
7,558,383	B2	7/2009	Shtivelman et al.
7,561,887	B2	7/2009	Lockhart
7,565,428	B2	7/2009	Deryugin et al.
7,609,829	B2	10/2009	Wang et al.
7,610,347	B2	10/2009	Petrovykh
7,619,996	B2	11/2009	Miloslavsky et al.
7,669,182	B2	2/2010	Garcia
7,672,998	B1	3/2010	Haskins et al.
7,706,520	B1	4/2010	Waterson et al.
7,715,332	B2	5/2010	Miloslavsky et al.
7,716,292	B2	5/2010	Kikinis
7,739,325	B1	6/2010	Okita et al.
7,764,231	B1	7/2010	Karr et al.
7,769,161	B1	8/2010	Hession et al.
7,779,067	B2	8/2010	Beck et al.
7,792,773	B2	9/2010	McCord et al.
7,808,977	B2	10/2010	Kikinis
7,823,167	B2	10/2010	Makagon et al.
7,853,717	B2	12/2010	Petrovykh
7,856,095	B2	12/2010	Brown
7,903,807	B2	3/2011	Neyman et al.
7,907,598	B2	3/2011	Anisimov et al.
7,929,978	B2	4/2011	Lockhart
8,009,821	B1	8/2011	Apparao et al.
8,018,921	B2	9/2011	Pogossiants et al.
8,031,698	B2	10/2011	Neyman
8,059,812	B1	11/2011	Bundy
8,068,598	B1	11/2011	Russi et al.
8,126,133	B1	2/2012	Everingham et al.
8,130,749	B2	3/2012	Kikinis
8,180,662	B2	5/2012	Minert et al.
8,180,666	B2	5/2012	Minert et al.
8,199,891	B2	6/2012	Brown et al.
8,209,207	B2	6/2012	Minert et al.
8,209,209	B2	6/2012	Minert et al.
8,223,948	B2	7/2012	Minert et al.
8,226,477	B1	7/2012	Machado et al.
8,254,558	B2	8/2012	Minert et al.
8,275,111	B2	9/2012	Golitsin et al.
8,345,856	B1	1/2013	Anisimov et al.
8,351,595	B2	1/2013	Peterson et al.
8,358,769	B2	1/2013	Neyman et al.
8,395,994	B2	3/2013	Stevenson et al.
8,396,205	B1	3/2013	Lowry et al.
8,411,844	B1	4/2013	Anisimov et al.
2001/0000458	A1	4/2001	Shtivelman et al.
2001/0001150	A1	5/2001	Miloslavsky
2001/0011366	A1	8/2001	Beck et al.
2001/0013041	A1	8/2001	MacLeod et al.
2001/0014604	A1	8/2001	Kingdon et al.
2001/0023430	A1	9/2001	Srinivasan
2001/0023448	A1	9/2001	Hanhan
2001/0024497	A1	9/2001	Campbell et al.
2001/0025309	A1	9/2001	MacLeod et al.
2001/0028649	A1	10/2001	Pogossiants et al.
2001/0029519	A1	10/2001	Hallinan et al.
2001/0037316	A1	11/2001	Shiloh
2001/0038624	A1*	11/2001	Greenberg et al. 370/352
2001/0040887	A1	11/2001	Shtivelman et al.
2001/0042095	A1	11/2001	Kim et al.
2001/0043586	A1	11/2001	Miloslavsky
2001/0043589	A1	11/2001	Kikinis
2001/0044676	A1	11/2001	MacLeod et al.
2001/0044828	A1	11/2001	Kikinis
2001/0054064	A1	12/2001	Kannan
2002/0001300	A1	1/2002	Miloslavsky et al.
2002/0012428	A1	1/2002	Neyman et al.
2002/0013150	A1	1/2002	McKenna et al.
2002/0019844	A1	2/2002	Kurowski et al.
2002/0019846	A1	2/2002	Miloslavsky et al.
2002/0025819	A1	2/2002	Cetusic et al.
2002/0035647	A1*	3/2002	Brown et al. 709/312
2002/0037076	A1	3/2002	Perlmutter
2002/0041674	A1	4/2002	Kamen
2002/0054579	A1	5/2002	Miloslavsky
2002/0055853	A1	5/2002	MacLeod et al.
2002/0056000	A1	5/2002	Coussement
2002/0057671	A1	5/2002	Kikinis
2002/0059164	A1	5/2002	Shtivelman
2002/0059374	A1	5/2002	Nuestro
2002/0060988	A1	5/2002	Shtivelman
2002/0062385	A1	5/2002	Dowling
2002/0064149	A1	5/2002	Elliott et al.
2002/0076031	A1	6/2002	Falcon et al.
2002/0078150	A1	6/2002	Thompson et al.
2002/0087648	A1	7/2002	Petrovykh
2002/0091726	A1	7/2002	MacLeod et al.
2002/0095462	A1	7/2002	Beck et al.
2002/0097708	A1	7/2002	Deng
2002/0099738	A1	7/2002	Grant
2002/0101866	A1	8/2002	Miloslavsky et al.
2002/0101880	A1	8/2002	Kim
2002/0103998	A1	8/2002	DeBruine
2002/0105957	A1	8/2002	Bondarenko et al.

(56) **References Cited**

U.S. PATENT DOCUMENTS

2002/0114278	A1	8/2002	Coussement
2002/0114441	A1	8/2002	Coussement
2002/0120719	A1	8/2002	Lee et al.
2002/0123899	A1	9/2002	Hall et al.
2002/0126828	A1	9/2002	Kamen
2002/0131399	A1	9/2002	Philonenko
2002/0136167	A1	9/2002	Steele et al.
2002/0150311	A1	10/2002	Lynn
2002/0169834	A1	11/2002	Miloslavsky et al.
2003/0002479	A1	1/2003	Vortman et al.
2003/0002652	A1	1/2003	Neyman et al.
2003/0002654	A1	1/2003	Torba
2003/0007621	A1	1/2003	Graves et al.
2003/0009530	A1	1/2003	Philonenko et al.
2003/0018702	A1	1/2003	Broughton et al.
2003/0018729	A1	1/2003	Miloslavsky
2003/0021259	A1	1/2003	Miloslavsky et al.
2003/0021406	A1	1/2003	Ostapchuck
2003/0026414	A1	2/2003	Baker et al.
2003/0037113	A1	2/2003	Petrovykh
2003/0043832	A1	3/2003	Anisimov et al.
2003/0051037	A1	3/2003	Sundaram et al.
2003/0055884	A1	3/2003	Yuen et al.
2003/0058884	A1	3/2003	Kallner et al.
2003/0084128	A1	5/2003	Anderson et al.
2003/0084349	A1	5/2003	Friedrichs et al.
2003/0088421	A1	5/2003	Maes et al.
2003/0097457	A1	5/2003	Saran et al.
2003/0099343	A1	5/2003	Dezonno
2003/0115353	A1	6/2003	Deryugin et al.
2003/0125048	A1	7/2003	Lockhart
2003/0135592	A1	7/2003	Vetter et al.
2003/0161448	A1	8/2003	Parolkar et al.
2003/0179729	A1	9/2003	MacLeod et al.
2003/0212558	A1	11/2003	Matula
2003/0216923	A1	11/2003	Gilmore et al.
2003/0220875	A1	11/2003	Lam et al.
2003/0229529	A1	12/2003	Mui et al.
2004/0017797	A1	1/2004	Chen et al.
2004/0019638	A1	1/2004	Makagon et al.
2004/0030557	A1	2/2004	Culy et al.
2004/0047302	A1	3/2004	Dezonno et al.
2004/0064348	A1	4/2004	Humenansky et al.
2004/0081183	A1	4/2004	Monza et al.
2004/0083195	A1	4/2004	McCord et al.
2004/0083281	A1	4/2004	Makagon et al.
2004/0083479	A1	4/2004	Bondarenko et al.
2004/0083482	A1	4/2004	Makagon et al.
2004/0102977	A1	5/2004	Metzler et al.
2004/0107025	A1	6/2004	Ransom et al.
2004/0111269	A1	6/2004	Koch
2004/0120502	A1	6/2004	Strathmeyer et al.
2004/0169675	A1	9/2004	Beck et al.
2004/0179516	A1	9/2004	Neyman
2004/0181574	A1	9/2004	Hanhan
2004/0199580	A1	10/2004	Zhakov et al.
2004/0208134	A1	10/2004	Neyman et al.
2004/0208309	A1	10/2004	Miloslavsky
2004/0213400	A1	10/2004	Golitsin et al.
2004/0264678	A1	12/2004	Ostapchuck
2004/0267892	A1	12/2004	Kikinis
2005/0013417	A1	1/2005	Zimmers et al.
2005/0033851	A1	2/2005	Kikinis
2005/0041678	A1	2/2005	Nuestro
2005/0128961	A1	6/2005	Miloslavsky et al.
2005/0147090	A1	7/2005	MacLeod et al.
2005/0154792	A1	7/2005	Deryugin et al.
2005/0207559	A1	9/2005	Shtivelman et al.
2006/0029206	A1	2/2006	Anisimov et al.
2006/0034262	A1	2/2006	Pogossiants et al.
2006/0079250	A1	4/2006	Lockhart
2006/0080107	A1	4/2006	Hill et al.
2006/0095568	A1	5/2006	Makagon et al.
2006/0109976	A1	5/2006	Sundaram et al.
2006/0133594	A1	6/2006	Neyman et al.
2006/0153173	A1	7/2006	Beck et al.
2006/0209797	A1	9/2006	Anisimov et al.
2006/0210047	A1	9/2006	Neyman et al.
2006/0245421	A1	11/2006	Ostapchuk
2007/0002744	A1	1/2007	Mewhinney et al.
2007/0041525	A1	2/2007	Tingley et al.
2007/0041567	A1	2/2007	Anisimov et al.
2007/0071224	A1	3/2007	Shtivelman et al.
2007/0143301	A1	6/2007	Tran
2007/0195940	A1	8/2007	Miloslavsky et al.
2007/0213073	A1	9/2007	Lockhart
2007/0274495	A1	11/2007	Youd et al.
2008/0002822	A1	1/2008	Petrovykh
2008/0013531	A1	1/2008	Elliott et al.
2008/0043728	A1	2/2008	Miloslavsky et al.
2008/0043955	A1	2/2008	Shtivelman et al.
2008/0043975	A1	2/2008	Miloslavsky et al.
2008/0043977	A1	2/2008	Neyman et al.
2008/0046504	A1	2/2008	Deryugin et al.
2008/0046531	A1	2/2008	Shtivelman et al.
2008/0049731	A1	2/2008	Kikinis
2008/0049737	A1	2/2008	Neyman
2008/0049928	A1	2/2008	Miloslavsky et al.
2008/0049929	A1	2/2008	Miloslavsky et al.
2008/0062971	A1	3/2008	Kikinis
2008/0130844	A1	6/2008	Hubbard et al.
2008/0205378	A1	8/2008	Wyss et al.
2008/0222240	A1	9/2008	Deryugin et al.
2008/0285739	A1	11/2008	Golitsin et al.
2009/0089136	A1	4/2009	Minert et al.
2009/0089451	A1	4/2009	Petrovykh
2009/0227267	A1	9/2009	Lockhart
2009/0240346	A1	9/2009	Cadigan, Jr. et al.
2010/0157979	A1	6/2010	Anisimov et al.
2010/0198930	A1	8/2010	Kikinis
2011/0099602	A1	4/2011	Apparao et al.
2011/0178946	A1	7/2011	Minert et al.
2011/0179304	A1	7/2011	Peterson
2011/0179398	A1	7/2011	Peterson
2011/0182418	A1	7/2011	Anisimov et al.
2012/0047266	A1	2/2012	Minert
2012/0066016	A1	3/2012	Minert et al.
2012/0195415	A1	8/2012	Wyss et al.
2013/0016115	A1	1/2013	Minert et al.
2013/0129067	A1	5/2013	Neyman et al.
2013/0230160	A1	9/2013	Neyman et al.

FOREIGN PATENT DOCUMENTS

AT	316736	2/2006
AT	317621	2/2006
AT	318048	3/2006
AT	337678	9/2006
AT	379921	12/2007
AT	380434	12/2007
AT	384398	2/2008
AT	388578	3/2008
AT	401736	8/2008
AT	413059	11/2008
AT	424090	3/2009
AT	465451	5/2010
AT	474415	7/2010
AU	2604797	10/1997
AU	718233 B2	3/1998
AU	5274398	3/1998
AU	6023598	8/1998
AU	6034698	8/1998
AU	6167398	8/1998
AU	6319498	8/1998
AU	6655298	9/1998
AU	6655398	9/1998
AU	7099298	10/1998
AU	735134 B2	3/1999
AU	736449 B2	4/1999
AU	737483 B2	4/1999
AU	743217 B2	4/1999
AU	745404 B2	4/1999
AU	748636 B2	4/1999
AU	9225198	4/1999

(56) **References Cited**

FOREIGN PATENT DOCUMENTS

AU	9228098		4/1999
AU	9381998		4/1999
AU	9479298		4/1999
AU	743880	B2	5/1999
AU	1118899		5/1999
AU	740090	B2	6/1999
AU	743737	B2	6/1999
AU	744340	B2	6/1999
AU	1120099		6/1999
AU	1276799		6/1999
AU	1286299		6/1999
AU	741437	B2	8/1999
AU	758713	B2	8/1999
AU	2595499		8/1999
AU	2595599		8/1999
AU	2667299		8/1999
AU	2674899		8/1999
AU	739979	B2	9/1999
AU	2674799		9/1999
AU	749023	B2	12/1999
AU	4427299		12/1999
AU	4819499		12/1999
AU	746085	B2	1/2000
AU	4426799		1/2000
AU	750215	B2	4/2000
AU	754238	B2	4/2000
AU	755234	B2	4/2000
AU	5807099		4/2000
AU	5810599		4/2000
AU	5813699		4/2000
AU	748456	B2	5/2000
AU	751143	B2	5/2000
AU	751232	B2	5/2000
AU	751269	B2	5/2000
AU	751301	B2	5/2000
AU	755138	B2	5/2000
AU	1233800		5/2000
AU	1327200		5/2000
AU	1328200		5/2000
AU	1328300		5/2000
AU	1454700		5/2000
AU	1717700		5/2000
AU	1718600		5/2000
AU	2045900		6/2000
AU	748447	B2	7/2000
AU	3113800		7/2000
AU	2964900		9/2000
AU	3470800		9/2000
AU	4507700		2/2001
AU	6798300		4/2001
AU	1077201		6/2001
AU	1077301		6/2001
AU	8006800		6/2001
AU	4732501		10/2001
AU	5384201		10/2001
AU	5724801		11/2001
AU	756656	B2	1/2003
AU	2003300117		8/2004
BR	9913621	A	5/2001
BR	9913622	A	5/2001
CA	2178705	A1	3/1997
CA	2391428	A1	3/1997
CA	2259912	C	1/1998
CA	2280002	A1	8/1998
CA	2289193	A1	12/1998
CA	2289198	A1	12/1998
CA	2302397	A1	3/1999
CA	2302488	A1	3/1999
CA	2302674	A1	3/1999
CA	2302680	A1	3/1999
CA	2302704	A1	3/1999
CA	2302678	A1	4/1999
CA	2308590	A1	5/1999
CA	2309185	A1	5/1999
CA	2309186	A1	5/1999
CA	2309183	A1	6/1999
CA	2320978	A1	8/1999
CA	2320979	A1	8/1999
CA	2320989	A1	8/1999
CA	2330608	A1	12/1999
CA	2334513	A1	12/1999
CA	2343286	A1	3/2000
CA	2343288	A1	3/2000
CA	2343756	A1	3/2000
CA	2347721	A1	5/2000
CA	2348567	A1	5/2000
CA	2348574	A1	5/2000
CA	2348575	C	5/2000
CA	2348994	A1	5/2000
CA	2348999	A1	5/2000
CA	2350515	A1	5/2000
CA	2352973	A1	6/2000
CA	2362172	A1	8/2000
CA	2313596	A1	2/2001
CN	1282484	A	1/2001
CN	1282485	A	1/2001
CN	1285990	A	2/2001
CN	1285991	A	2/2001
CN	1293798	A	5/2001
CN	1293858	A	5/2001
CN	1298590	A	6/2001
CN	1309861	A	8/2001
CN	1310822	A	8/2001
CN	1323418	A	11/2001
CN	1323421	A	11/2001
CN	1354942	A	6/2002
CN	1130061	C	12/2003
CN	1132399	C	12/2003
CN	1145314	C	4/2004
CN	1149521	C	5/2004
CN	1152549	C	6/2004
CN	1512724	A	7/2004
CN	1520197	A	8/2004
CN	1197336	C	4/2005
CN	1200548	C	5/2005
CN	1662025	A	8/2005
CN	1232077	C	12/2005
CN	1756280	A	4/2006
CN	100477702	C	4/2009
CN	100547568	C	10/2009
CN	102257789	A	11/2011
CN	101635775	B	12/2011
DE	60011863	T2	12/2004
DE	69730498	T2	9/2005
DE	60015236	T2	2/2006
DE	69832275	T2	8/2006
DE	69833285	T2	9/2006
DE	69833394	T2	10/2006
DE	69833462	T2	10/2006
DE	69833935	T2	11/2006
DE	60214191	T2	12/2006
DE	69834184	T2	3/2007
DE	69838795	T2	10/2008
DE	69838814	T2	11/2008
DE	69839022	T2	1/2009
DE	69839222	T2	3/2009
EP	0193961	A2	9/1986
EP	0236013	A2	9/1987
EP	0376517	A2	7/1990
EP	0420779	A2	4/1991
EP	0424015	A2	4/1991
EP	0425161	A2	5/1991
EP	0425163	A2	5/1991
EP	0515068	A2	11/1992
EP	0528732	A1	2/1993
EP	0532972	A1	3/1993
EP	0539105	A2	4/1993
EP	0559979	A2	9/1993
EP	0568770	A2	11/1993
EP	0610625	A2	8/1994
EP	0647050	A2	4/1995
EP	0647051	A1	4/1995
EP	0660573	A2	6/1995
EP	0701358	A1	3/1996

(56) **References Cited**

FOREIGN PATENT DOCUMENTS

EP	0705017	A2	4/1996
EP	0721268	A2	7/1996
EP	0725526	A2	8/1996
EP	0734187	A2	9/1996
EP	0740450	A2	10/1996
EP	0748102	A2	12/1996
EP	0753956	A2	1/1997
EP	0755146	A2	1/1997
EP	0758175	A1	2/1997
EP	0771095	A2	5/1997
EP	0792076	A2	8/1997
EP	0806858	A2	11/1997
EP	0817455	A2	1/1998
EP	0856980	A2	8/1998
EP	0863651	A2	9/1998
EP	0866407	A1	9/1998
EP	0869639	A2	10/1998
EP	0883306	A2	12/1998
EP	0908047	A1	4/1999
EP	0958560	A1	11/1999
EP	0962087	A1	12/1999
EP	1006706	A2	6/2000
EP	1013062	A1	6/2000
EP	1013066	A1	6/2000
EP	1016280	A1	7/2000
EP	1044553	A1	10/2000
EP	1064630	A1	1/2001
EP	1066712	A1	1/2001
EP	1075153	A2	2/2001
EP	1087597	A2	3/2001
EP	1088277	A1	4/2001
EP	1092313	A1	4/2001
EP	1107555	A2	6/2001
EP	1114543	A1	7/2001
EP	1125214	A1	8/2001
EP	1133677	A2	9/2001
EP	1133736	A1	9/2001
EP	1133742	A1	9/2001
EP	1145153	A1	10/2001
EP	1145154	A1	10/2001
EP	1408678	B1	11/2001
EP	1163564	A2	12/2001
EP	1193961	A2	4/2002
EP	1227635	A2	7/2002
EP	1248447	A2	10/2002
EP	1290861	A1	3/2003
EP	1292901	A1	3/2003
EP	1292939	A1	3/2003
EP	1328121	A1	7/2003
EP	0873642	B1	4/2004
EP	1413954	A2	4/2004
EP	1107615	B1	6/2004
EP	1033024	A4	9/2004
EP	1129545	A1	9/2004
EP	1061723	B1	10/2004
EP	1465397	A1	10/2004
EP	1469663	A1	10/2004
EP	1484903	A2	12/2004
EP	1566949	A1	8/2005
EP	0985308	B1	11/2005
EP	1359735	B1	1/2006
EP	1357729	B1	2/2006
EP	1377001	B1	2/2006
EP	0954922	B1	3/2006
EP	0986875	B1	4/2006
EP	1410614	B1	8/2006
EP	1774760	A2	4/2007
EP	1021905	B1	11/2007
EP	1031232	B1	12/2007
EP	1865697	A3	12/2007
EP	1040638	B1	1/2008
EP	1048162	B1	3/2008
EP	1157509	B1	7/2008
EP	1337079	B1	9/2008
EP	1326415	B1	10/2008
EP	1013054	B1	2/2009
EP	1333653	B1	4/2009
EP	0983676	B1	6/2009
EP	1125208	B1	4/2010
EP	1142284	B1	7/2010
EP	2380323	A1	10/2011
EP	1057301	B1	8/2013
EP	1131728	B1	1/2014
EP	1625460	B1	5/2014
ES	2231120	T3	5/2005
ES	2255657	T3	7/2006
ES	2256666	T3	7/2006
ES	2257639	T3	8/2006
FR	2671252	A1	7/1992
GB	2273225	A	6/1994
GB	2306853	A	5/1997
GB	2315190	A	1/1998
GB	2324627	A	10/1998
GB	2369263	A	5/2002
JP	62-200956		9/1987
JP	63-149955		6/1988
JP	64-7460		1/1989
JP	64-77265		3/1989
JP	02-298154		12/1990
JP	03-052443		3/1991
JP	03-160865		7/1991
JP	03-177144		8/1991
JP	04-40723		2/1992
JP	4-66858		6/1992
JP	04-265049		9/1992
JP	4-336742		11/1992
JP	04-371056		12/1992
JP	06-044157		2/1994
JP	06-046150		2/1994
JP	06-066830		3/1994
JP	06-069988		3/1994
JP	06-103058		4/1994
JP	06-121051		4/1994
JP	06-261129		9/1994
JP	06-291877		10/1994
JP	06-334748		12/1994
JP	07-046321		2/1995
JP	07-058851		3/1995
JP	07-115471		5/1995
JP	07-170288		7/1995
JP	07-170546		7/1995
JP	07-262104		10/1995
JP	07-319538		12/1995
JP	07-336447		12/1995
JP	08-46699		2/1996
JP	08-056377		2/1996
JP	08-163252		6/1996
JP	08-181793		7/1996
JP	08-214076		8/1996
JP	08-214346		8/1996
JP	8-321885		12/1996
JP	8-329118		12/1996
JP	09-036963		2/1997
JP	09-504394		4/1997
JP	09-149137		6/1997
JP	09-163031		6/1997
JP	09-224093		8/1997
JP	09-265408		10/1997
JP	10-11374		1/1998
JP	10-13811		1/1998
JP	10-093713		4/1998
JP	10-093716		4/1998
JP	10-116249		5/1998
JP	10-143451		5/1998
JP	10-214113		8/1998
JP	10-224477		8/1998
JP	10-509847		9/1998
JP	10-304073		11/1998
JP	10-304074		11/1998
JP	10-327258		12/1998
JP	10-513632		12/1998
JP	11-055741		2/1999
JP	11-506292		6/1999
JP	11-183189		7/1999

(56) **References Cited**

FOREIGN PATENT DOCUMENTS

JP	11-508430		7/1999
JP	11-508715		7/1999
JP	11-317817		11/1999
JP	11-346266		12/1999
JP	2000-011005		1/2000
JP	2000-49847		2/2000
JP	2000-151819		5/2000
JP	2000-514985		11/2000
JP	2000-514986		11/2000
JP	2000-516432		12/2000
JP	2000-517142		12/2000
JP	2001-500677		1/2001
JP	2001-103533		4/2001
JP	2001-292236		10/2001
JP	2001-517027		10/2001
JP	2001-517029		10/2001
JP	2001-517038		10/2001
JP	2001-518754		10/2001
JP	2001-522201		11/2001
JP	2001-523930		11/2001
JP	3226929	B2	11/2001
JP	2001-524782		12/2001
JP	2001-526871		12/2001
JP	2002-503903		2/2002
JP	2002-503921		2/2002
JP	2002-504783		2/2002
JP	2002-518890		6/2002
JP	2002-519762		7/2002
JP	2002-525895		8/2002
JP	2002-528824		9/2002
JP	2002-529836		9/2002
JP	2002-529943		9/2002
JP	2002-529944		9/2002
JP	2002-529945		9/2002
JP	2002-529994		9/2002
JP	2002-530010		9/2002
JP	2002-534003		10/2002
JP	2002-537594		11/2002
JP	2003-502720		1/2003
JP	2003-507908		2/2003
JP	2003-510929		3/2003
JP	3384792	B2	3/2003
JP	3393119	B2	4/2003
JP	2003-516672		5/2003
JP	3453561	B2	10/2003
JP	3461488	B2	10/2003
JP	3516656	B2	4/2004
JP	3516659	B2	4/2004
JP	3547142	B2	7/2004
JP	3547397	B2	7/2004
JP	2004-312730		11/2004
JP	2005-504452		2/2005
JP	3615708	B2	2/2005
JP	3628962	B2	3/2005
JP	2005-094780		4/2005
JP	2005-102234		4/2005
JP	2005-124184		5/2005
JP	3681403	B2	8/2005
JP	3681406	B2	8/2005
JP	3686087	B2	8/2005
JP	3686337	B2	8/2005
JP	3735124	B2	1/2006
JP	3820151		9/2006
JP	2006-295947		10/2006
JP	3877523	B2	2/2007
JP	4057785	B2	3/2008
JP	4205310	B2	1/2009
JP	4234926	B2	3/2009
JP	4295186	B2	7/2009
JP	4450515	B2	4/2010
JP	8-331618		9/2011
JP	2012-513725		6/2012
KR	10-2011-0098841	A	9/2011
WO	WO9208194	A1	5/1992
WO	9401959	A1	1/1994
WO	WO9429995	A1	12/1994
WO	WO9508236	A2	3/1995
WO	9520860	A1	8/1995
WO	9533325	A2	12/1995
WO	9614704	A1	5/1996
WO	9620553	A2	7/1996
WO	WO9623265	A1	8/1996
WO	9627254	A1	9/1996
WO	9701917	A1	1/1997
WO	9713352	A1	4/1997
WO	WO9712472	A1	4/1997
WO	9718662	A1	5/1997
WO	WO9716014	A3	5/1997
WO	9722201	A2	6/1997
WO	WO9720424	A1	6/1997
WO	WO9723078	A1	6/1997
WO	9726749	A1	7/1997
WO	9729584	A1	8/1997
WO	WO9728635	A1	8/1997
WO	WO9734401	A1	9/1997
WO	9738389	A2	10/1997
WO	WO9736414	A1	10/1997
WO	WO9737500	A1	10/1997
WO	WO9738519	A1	10/1997
WO	WO9750235	A1	12/1997
WO	WO9801987	A1	1/1998
WO	9810573	A2	3/1998
WO	WO9813765	A1	4/1998
WO	WO9813974	A1	4/1998
WO	WO9817048	A1	4/1998
WO	9827479	A2	6/1998
WO	WO9831130	A1	7/1998
WO	9836551	A1	8/1998
WO	9837481	A1	8/1998
WO	WO9834390	A1	8/1998
WO	WO9835326	A1	8/1998
WO	WO9835509	A2	8/1998
WO	WO9837677	A2	8/1998
WO	WO9837686	A1	8/1998
WO	WO9837687	A1	8/1998
WO	9844714	A1	10/1998
WO	WO9844699	A1	10/1998
WO	WO9848577	A2	10/1998
WO	9856133	A2	12/1998
WO	WO9854877	A2	12/1998
WO	WO9856141	A1	12/1998
WO	WO9857501	A2	12/1998
WO	9900960	A1	1/1999
WO	WO9900966	A1	1/1999
WO	WO9903247	A2	1/1999
WO	9914951	A1	3/1999
WO	WO9912367	A1	3/1999
WO	WO9913635	A1	3/1999
WO	WO9914919	A1	3/1999
WO	WO9914920	A1	3/1999
WO	WO9914924	A1	3/1999
WO	WO9917518	A1	4/1999
WO	WO9923806	A1	5/1999
WO	WO9923807	A1	5/1999
WO	WO9926395	A1	5/1999
WO	WO9926424	A2	5/1999
WO	WO9927698	A1	6/1999
WO	WO9941720	A1	8/1999
WO	WO9941890	A2	8/1999
WO	WO9941891	A1	8/1999
WO	WO9941895	A1	8/1999
WO	WO9943137	A1	8/1999
WO	WO9925117		10/1999
WO	WO9956227	A1	11/1999
WO	WO9956229	A1	11/1999
WO	WO9965214	A1	12/1999
WO	WO9965252	A2	12/1999
WO	WO9967718	A1	12/1999
WO	WO0007332	A2	2/2000
WO	0018094	A1	3/2000
WO	WO0016203	A1	3/2000
WO	WO0016207	A1	3/2000
WO	WO0016523	A1	3/2000
WO	WO0025238	A1	5/2000

(56) **References Cited**

FOREIGN PATENT DOCUMENTS

WO	WO0026804	A1	5/2000
WO	WO0026816	A1	5/2000
WO	WO0026817	A1	5/2000
WO	WO0027063	A2	5/2000
WO	WO0028425	A1	5/2000
WO	WO0028702	A1	5/2000
WO	WO0035173	A1	6/2000
WO	WO0038398	A1	6/2000
WO	0044159	A1	7/2000
WO	WO0049482	A2	8/2000
WO	WO0049778	A1	8/2000
WO	WO0113606	A1	2/2001
WO	WO0124025	A1	4/2001
WO	WO0140997	A1	6/2001
WO	WO0141372	A1	6/2001
WO	WO0143410	A1	6/2001
WO	WO0152513	A1	7/2001
WO	WO0180214	A1	10/2001
WO	WO0180540	A1	10/2001
WO	WO0184360	A1	11/2001
WO	WO02065741	A2	8/2002
WO	WO03010948	A1	2/2003
WO	WO20044063854	A2	7/2004
WO	WO2005036907	A1	4/2005
WO	WO2006055059	A2	5/2006
WO	WO175151	A1	7/2010

OTHER PUBLICATIONS

Metz, Christopher, "IP Routers: New Tool for Gigabit Networking," On the Wire, IEEE Internet, Nov./Dec. 1998, 5 pages.
Microsoft Dictionary Pages, Microsoft Press, Redmond, WA, 1991, 2 pages.
Monson-Haefel, Richard, "Enterprise JavaBeans," O'Reilly & Assoc., 2nd Ed., 1999, 7 pages.
Murayama, Hideki, "Integrated Customer Supporting System View Workshop/CS, OA Business Personal Computer," NEC Business System, Denpa Press Co., Ltd., vol. 15, No. 12, Dec. 1997, 6 pages.
Nariani, Sushil, "Internet Telephony," Whatis.com, Oct. 25, 1999, 2 pages.
Newton'S Telecom Dictionary, The Official Dictionary of Telcommunications & the Internet, 16th Edition, Telecom Books, Feb. 2000, 3 pages.
Newton, Harry, "Newton's Telecom Dictionary," Flatiron Publishing, New York, 1994, 7 pages.
Orozco-Barbosa, Luis et al., "Design and Performance Evaluation of Intelligent Multimedia Services," Computer Communications, vol. 20, 1997, 14 pages.
Rangan, P. Venkat, et al., "A Window-Based Editor for Digital Video and Audio," Proceedings of the 25th Hawaii International Conference on System Sciences, IEEE, vol. 2, Jan. 1992, 9 pages.
Recker, Mimi M. et al., "Predicting Document Access in Large, Multimedia Repositories," ACM Transactions on Computer-Human Interaction, vol. 3, 1994, 23 pages.
Rodriguez-Martinez, Manuel et al., "MOCHA: A Self-Extensible Database Middleware System for Distributed Data Sources," International Conference on Management Data—SIGMOD, 2000, 12 pages.
Rosenberg, Arthur M., "Call Center Computer Telephony: Technology Overview," Gartner, Inc., Jan. 1998 (24 pages).
Schmandt, Chris, "Phoneshell: The Telephone as Computer Terminal," Proceedings of ACM Multimedia Conference, 1993, 10 pages.
Sekine, Shoji et al., "Front Office Oriented Solution for Customer Satisfaction and Profit Expansion," Hitachi Hyoron Co, Ltd., Japan, vol. 80, No. 9, Sep. 1998, 11 pages.
Semilof, Margie, "Call Centers Go On-Line," Communications Week, No Date Available, 2 pages.
Sevcik, Peter et al., "The Call Center Revolution," Northeast Consulting Technical Paper, Jan. 1, 1997, 12 pages.
Smith, J.D., An Overview to Computer-Telecommunications Integration (CTI), Telecommunications, Conference Publication No. 404, IEEE, Mar. 26-29, 1995, 5 pages.
Sulkin, Allan, Building the ACD-LAN Connection, Business Communications Review, Jun. 1996, 4 pages.
Supplemental European Search Report for Application No. 98908545.1, dated Sep. 5, 2002, 4 pages.
Szlam, Aleksander et al., "Predictive Dialing Fundamentals," Flatiron Publishing, New York, 1996, 28 pages.
Tadamura, Katsumi et al., "Synchronizing Computer Graphics Animation and Audio," IEEE, 1998, 11 pages.
Taisei, Mori et al., "Call Center: Promotion of Information Use with a Direct Link to Core Business with Eye on the Internet Customer," Ric Telecom Corporation, Japan, vol. 10, No. 8, Aug. 1, 1998, 9 pages.
Tang, Jingrong et al., "Advanced Service Architecture for H.323 Internet Protocol Telephony," Computer Communications, vol. 23, 2000, 14 pages.
Thio, Fu Wang et al., "Distributed Multimedia Database: a Design and Application Study," The Fourth International Conference on High Performance Computing in the Asia-Pacific Region, IEEE, Beijing, China, vol. 2, May 2000, 6 pages.
Toji, Ryutaro et al., "A Study of Customer Contact Operation System and Functions," Proceedings of the IECE General Conference, Comm. 2, Mar. 6, 1997, 3 pages.
Toji, Ryutaro et al., "OCN Multimedia Customer Contact System," NTT Technical Journal, the Telecommunication Association, Japan, vol. 10, No. 1, Jan. 1, 1998, 6 pages.
Tsunemasa, Mizuo., "CTI World 2: World of CTI," Business Communication, vol. 34, No. 2, Feb. 1, 1997, 13 pages.
Van Zijl, Lynette, et al., "A Tool for Graphical Network Modeling and Analysis," IEEE Software, Jan. 1992, 8 pages.
Vazquez, E., et al., Graphical Interface for Communication Network Analysis and Simulation, Department of Telematic Engineering, Technical University of Madrid, IEE, 1991, Spain, 4 pages.
Wagner, Susanne., "Intralingual Speech-to-Text Conversion in Real-Time: Challenges and Opportunities," Challenges of Multidimensional Translation Conference Proceedings, 2005, 10 pages.
Wang, Yong et al., "Real-time scheduling for multi-agent call center automation", Information service agents lab, school of computing science Simon Fraser University, Burnaby, BC Canada, 1999, 13 pages.
Wolter, Roger., "XML Web Services Basics," Microsoft Corporation, Dec. 2001, 4 pages.
Zenel, Bruce et al., Intelligent Communication Filtering for Limited Bandwidth Environments, Computer Science Department, Columnia University, IEEE, 1995, 7 pages.
"Competitive Gateway Product," Nikkei Communications, Japan, No. 257, Nov. 1997, 18 pages.
"Guide for the Use of Micro-Researcher II/SGR (Scroll Graph Section)," NEC Corporation, Third Edition, Chapters 1 & 5, Jul. 1995, 2 pages.
"Kana: Customer Messaging System," Kana Communications Sales Brochure, Palo Alto, CA, 1996, 12 pages.
"Latest Trend in CTI," Nikkei Communications, No. 248, Jun. 16, 1997, 14 pages.
"Method for Automatic Contextual Transposition Upon Receipt of Item of Specified Criteria," IBM Technical Disclosure Bulletin, vol. 37, No. 2B, Feb. 1994, 1 page.
"New Telephone Service Changing Computer Telephone Business," Nikkei Communications, Nov. 11, 1996, 7 pages.
"Single Line Suffices for Internet Telephone," Nikkei Communications, May 19, 1997, 9 pages.
"Solution Drivers/CTI, CTI Solution Strategy of Seven Computer Vendors, Toward Market Development of Mainly Bank, Insurance and Communications Markets," Computopia, Computer Age Co., Ltd., Japan, vol. 33, No. 379, 5 pages, Apr. 1998.
Bachmann, David W. et al., "NetMod: A Design Tool for Large-Scale Heterogeneous Campus Networks," Center for Information Technology Integration (CITI), The University of Michigan, Ann Arbor, MI, Jun. 15, 1990, 34 pages.

(56) **References Cited**

OTHER PUBLICATIONS

Bangun, H. et al., A Network Architecture for Multiuser Networked Games on Demand, International Conference on Information Communications and Signal Processing, ICICS '97, Sep. 9-12, 1997, 5 pages.
Bernett, Howard et al., "Assessing Web-Enabled Call Center Technologies," IT Pro, May/Jun. 2001, 7 pages.
Bertsekas, Dimitri et al., "Data Networks," Prentice-Hall, New Jersey, 1987, 5 pages.
Bickley, M. et al., Using Servers to Enhance Control System Capability, 1999 Particle Accelerator Conference, New York, NY, Mar. 29-Apr. 2, 1999, 3 pages.
Bradley, Kirk A. et al., "Detecting Disruptive Routers: a Distributed Network Monitoring Approach," Department of Computer Science, University of California, Davis, Sep. 1, 1998, 10 pages.
Canadian Office Action for Application No. 2,259,912, dated Nov. 19, 2011, 2 pages.
Canadian Office Action for Application No. 2,289,198, dated Jun. 28, 2002, 2 pages.
Canadian Office Action for Application No. 2,302,397, dated Apr. 23, 2002, 2 pages.
Canadian Office Action for Application No. 2,302,678, dated Apr. 23, 2002, 2 pages.
Canadian Office Action for Application No. 2308590, dated Jun. 28, 2002, 2 pages.
Canadian Office Action for Application No. 2309183, dated Jul. 23, 2002, 2 pages.
Canadian Office Action for Application No. 2320978, dated Jun. 2, 2003, 2 pages.
Canadian Office Action for Application No. 2320978, dated Sep. 26, 2002, 2 pages.
Canadian Office Action for Application No. 2334513, dated May 30, 2003, 2 pages.
Canadian Office Action for Application No. 2347721, dated Aug. 12, 2004, 3 pages.
Canadian Office Action for Application No. 2352973, dated Apr. 17, 2003, 3 pages.
Chan, Kevin F. et al., "Interactive Network Planning and Analysis on a Personal Computer," Computer Applications in Power, IEEE, vol. 3, No. 1, Jan. 1990, 5 pages.
Chau, Sam et al., "Intelligent Network Routing Using CCS7 and ISDN," Global Telecommunications Conference, vol. 3, 6 pages, 1990.
Chaudhuri, Surajit et al., "Optimizing Queries over Multimedia Repositories," Hewlett-Packard Laboratories, Stanford, Mar. 1996, 12 pages.
Chaum, David, "Untraceable Electronic Mail, Return Addresses, and Digital Pseudonyms," Communications of the ACM, vol. 24, No. 2, Feb. 1981, 8 pages.
Chew, T.-S. et al., "NETPLAN-a Telecommunications Network Planning Support System," TENCON '92, IEEE Region 10 International Conference, vol. 2, 7 pages, 1992.
Chinese Office Action for Application No. 200980151937.6, dated Jul. 1, 2013, 14 pages.
Chinese Office Action for Application No. 98812258.8 dated Jul. 26, 2002, 5 pages.
Chinese Office Action for Application No. 98812259.6, dated Jan. 10, 2003, 9 pages.
Chinese Office Action for Application No. 98812261.8, dated Jun. 20, 2003, 10 pages.
Chinese Office Action for Application No. 99808531.6, dated Mar. 14, 2003, 14 pages.
Chinese Office Action for Application No. 99811995.4, dated Apr. 8, 2005, 6 pages.
Chinese Office Action for Application No. 99811995.4, dated Jul. 6, 2007, 11 pages.
Chinese Office Action for Application No. 99811996.2, dated May 9, 2003, 10 pages.
Chiu, H. et al., "Conferencing Metaphor," IBM Technical Disclosure Bulletin, vol. 36, No. 2, Feb. 1993, 4 pages.
Chou, Sheng-Lin., et al., "Computer Telephony Integration and Its Applications," IEEE Communications Surveys & Tutorials, vol. 3, No. 1, 2000, 10 pages.
Cordom, Christopher et al., "CONVERSANT VIS Listens and Talks to Your Customers," AT&T Technology, vol. 9, No. 2, 4 pages, 1994.
Curbera, Francisco et al., "Unraveling the Web Services Web: An Introduction to SOAP, WSDL, and UDDI," IEEE Internet Computing, 8 pages, Mar./Apr. 2002.
D'Hooge, Herman, "The Communicating PC," IEEE Communications Magazine, 6 pages, Apr. 1996.
Durinovic-Johri, Sanja et al., "Advanced Routing Solutions for Toll-Free Customers: Algorithm Design and Performance," Proceedings of the International Teletraffic Congress, ITC-15, 1997, 12 pages.
Eren, P. Erhan, et al., "Interactive Object-Based Analysis and Manipulation of Digital Video," IEEE Workshop on Multimedia Signal Processing, 1998, 6 pages.
Esesve, D.R., "Wireless Application Protocol (WAP)," Vitam College of Engineering, No Date Available, 12 pages.
European Office action Application No. 03022831.6, dated Nov. 30, 2006, 7 pages.
European Office action Application No. 04011886.1, dated Mar. 9, 2007, 6 pages.
European Office action for Application No. 00115441.8, dated Feb. 11, 2004, 7 pages.
European Office action for Application No. 00115441.8, dated Mar. 15, 2005, 4 pages.
European Office Action for Application No. 00119160.0, dated Jan. 16, 2004, 6 pages.
European Office action for Application No. 00123329.5, dated Jun. 17, 2002, 6 pages.
European Office Action for Application No. 00123331.1, dated Apr. 18, 2006, 5 pages.
European Office Action for Application No. 00305049.9, dated Dec. 29, 2003, 5 pages.
European Office Action for Application No. 00908266.0, dated Aug. 10, 2005, 6 pages.
European Office action for Application No. 02400027.5, dated Jan. 21, 2008, 5 pages.
European Office action for Application No. 02756535.7, dated Aug. 5, 2005, 6 pages.
European Office Action for Application No. 03800376.0, dated Jul. 8, 2008, 6 pages.
European Office Action for Application No. 04009176.1, dated Oct. 12, 2011, 8 pages.
European Office Action for Application No. 97904087.0, dated Jun. 25, 2002, 5 pages.
European Office Action for Application No. 97933327.5, dated Aug. 26, 2002, 4 pages.
European Office Action for Application No. 97933327.5, dated Feb. 7, 2002, 5 pages.
European Office Action for Application No. 98903471.5, dated May 29, 2006, 4 pages.
European Office Action for Application No. 98903471.5, dated Oct. 11, 2004, 6 pages.
European Office Action for Application No. 98908545.1, dated Mar. 15, 2005, 4 pages.
European Office Action for Application No. 98908545.1, dated Nov. 14, 2003, 10 pages.
European Office Action for Application No. 98924821.6, dated Aug. 26, 2003, 4 pages.
European Office Action for Application No. 98926248.0, dated Aug. 5, 2004, 4 pages.
European Office Action for Application No. 98926248.0, dated Dec. 11, 2003, 4 pages.
European Office Action for Application No. 98926248.0, dated Oct. 21, 2002, 6 pages.
European Office Action for Application No. 98944799.0, dated Aug. 18, 2005, 7 pages.
European Office Action for Application No. 98944799.0, dated Mar. 26, 2008, 5 pages.
European Office Action for Application No. 98944830.3, dated Jan. 30, 2006, 9 pages.

(56) **References Cited**

OTHER PUBLICATIONS

European Office Action for Application No. 98946907.7, dated Jun. 1, 2006, 6 pages.
European Office Action for Application No. 98946926.7, dated Dec. 8, 2005, 4 pages.
European Office Action for Application No. 98953947.3, dated Aug. 22, 2006, 6 pages.
European Office Action for Application No. 98953962.2, dated Oct. 28, 2005, 5 pages.
European Office Action for Application No. 98956309.3, dated Jun. 8, 2005, 5 pages.
European Office Action for Application No. 99905907.4, dated Oct. 31, 2005, 4 pages.
European Office Action for Application No. 99906856.2, dated Sep. 24, 2007, 5 pages.
European Office Action for Application No. 99906958.6, dated Feb. 22, 2006, 7 pages.
European Office Action for Application No. 99927333.7, dated Aug. 21, 2006, 9 pages.
European Office Action for Application No. 99927340.2, dated Aug. 9, 2011, 6 pages.
European Office Action for Application No. 99927340.2, dated Nov. 25, 2013, 5 pages.
European Office Action for Application No. 99945479.6, dated Aug. 9, 2006, 6 pages.
European Office Action for Application No. 99945519.9, dated Aug. 20, 2007, 6 pages.
European Office action for Application No. 99956732.4, dated Aug. 17, 2006, 7 pages.
European Office action for Application No. 99956745.6, dated Mar. 14, 2006, 5 pages.
European Office Action for Application No. 99960267.5, dated May 10, 2007, 6 pages.
European Office Action for Application No. 99960279.0, dated Aug. 16, 2005, 6 pages.
European Office Action for Application No. 99965163.1, dated Jul. 13, 2009, 5 pages.
European Office for Application No. 00115441.8, dated May 18, 2006, 11 pages.
European Search Report and Written Opinion for Application No. 05783002.8, dated Mar. 16, 2009, 8 pages.
European Search Report for 0115441.8 (now EP1075153), dated Nov. 6, 2002, 3 pages.
European Search Report for Application No. 00123329.5, dated Jan. 30, 2002, 2 pages.
European Search Report for Application No. 00123331.1, dated Dec. 5, 2003, 6 pages.
European Search Report for Application No. 00305049.9, dated May 7, 2003, 3 pages.
European Search Report for Application No. 00908266.0, dated May 24, 2005, 3 pages.
European Search Report for Application No. 00913226.7, dated Feb. 14, 2005, 3 pages.
European Search Report for Application No. 0119160.0, dated Apr. 17, 2003, 3 pages.
European Search Report for Application No. 01920248.0, dated May 3, 2004, 3 pages.
European Search Report for Application No. 01927387.9, dated Jun. 2, 2006, 3 pages.
European Search Report for Application No. 02400027.5, dated Feb. 20, 2004, 3 pages.
European Search Report for Application No. 02756535.7, dated May 25, 2005, 4 pages.
European Search Report for Application No. 03002575.3, dated Jun. 4, 2003, 3 pages.
European Search Report for Application No. 03008532.8, dated Dec. 27, 2004, 3 pages.
European Search Report for Application No. 03008534.4, dated Jul. 23, 2003, 3 pages.
European Search Report for Application No. 03022831.6, dated Mar. 22, 2006, 3 pages.
European Search Report for Application No. 03023463.7, dated Jun. 14, 2004, 3 pages.
European Search Report for Application No. 03076826.1, dated Sep. 10, 2003, 3 pages.
European Search Report for Application No. 03077174.5, dated Sep. 4, 2003, 4 pages.
European Search Report for Application No. 03077712.2, dated Mar. 29, 2004, 3 pages.
European Search Report for Application No. 03800376, dated May 7, 2007, 3 pages.
European Search Report for Application No. 04007911.3, dated Aug. 17, 2004, 5 pages.
European Search Report for Application No. 04007913.9, dated Aug. 5, 2004, 4 pages.
European Search Report for Application No. 04011886.1, dated Jun. 22, 2006, 5 pages.
European Search Report for Application No. 07018035.1, dated Apr. 23, 2009, 4 pages.
European Search Report for Application No. 97904087.0, dated Nov. 5, 2001, 3 pages.
European Search Report for Application No. 97933327.5, dated Oct. 11, 2001, 3 pages.
European Search Report for Application No. 98903471.5, dated Jul. 26, 2002, 4 pages.
European Search Report for Application No. 98907371.3, dated Mar. 28, 2002, 3 pages.
European Search Report for Application No. 98924821.6, dated Jun. 13, 2002, 2 pages.
European Search Report for Application No. 98926248, dated Jul. 18, 2002, 3 pages.
European Search Report for Application No. 98944799.0, dated Aug. 5, 2004, 3 pages.
European Search Report for Application No. 98944830.3, dated Aug. 11, 2004, 3 pages.
European Search Report for Application No. 98946907.7, dated Aug. 11, 2004, 3 pages.
European Search Report for Application No. 98946926.7, dated Aug. 11, 2004, 3 pages.
European Search Report for Application No. 98948163.5, dated Aug. 8, 2000, 3 pages.
European Search Report for Application No. 98948164.3, dated Jun. 15, 2004, 3 pages.
European Search Report for Application No. 98953947.3, dated Aug. 20, 2004, 3 pages.
European Search Report for Application No. 98953962.2, dated Sep. 2, 2004, 3 pages.
European Search Report for Application No. 98956187.3, dated Sep. 16, 2005, 3 pages.
European Search Report for Application No. 98956309.3, dated Sep. 10, 2004, 3 pages.
European Search Report for Application No. 99905907.4, dated Jun. 1, 2005, 3 pages.
European Search Report for Application No. 99906856.2, dated Oct. 4, 2006, 3 pages.
European Search Report for Application No. 99906958.6, dated Aug. 19, 2005, 3 pages.
European Search Report for Application No. 99927333.7, dated Mar. 30, 2005, 5 pages.
European Search Report for Application No. 99927340.2, dated Oct. 18, 2004, 3 pages.
European Search Report for Application No. 99945479.6, dated Mar. 24, 2006, 3 pages.
European Search Report for Application No. 99945519.9, dated Oct. 18, 2005, 3 pages.
European Search Report for Application No. 99945556.1, dated Nov. 16, 2004, 3 pages.
European Search Report for Application No. 99956732.4, dated Apr. 19, 2006, 4 pages.
European Search Report for Application No. 99956745.6, dated Jun. 30, 2005, 3 pages.

(56) **References Cited**

OTHER PUBLICATIONS

European Search Report for Application No. 99960267.5, dated Jul. 14, 2005, 3 pages.
European Search Report for Application No. 99960279.0, dated Apr. 26, 2005, 3 pages.
European Search Report for Application No. 99965163.1, dated Nov. 19, 2004, 4 pages.
European Search Report for Application No. 99971602.0, dated Feb. 6, 2007, 3 pages.
European Search Report for Application No. 98903623.1, dated Apr. 17, 2002, 3 pages.
Festa, Paul, "Vignette Updates StoryServer Platform," CNET News.com, Sep. 16, 1997, 4 pages.
Foster, Robin Harris, "Advanced DEFINITY Call Centers: Working for You and Your Customers," AT&T Technology, vol. 9, No. 2, 1994, 6 pages.
Francis, Paul et al., "Flexible Routing and Addressing for a Next Generation IP," SIGCOMM, 10 pages, 1994.
Gawrys, G.W., et al., "ISDN: Integrated Network/Premises Solutions for Customer Needs," ICC, 6 pages, 1986.
Gechter, J. et al., "ISDN Service Opportunities in the Intelligent Network," Proceedings of the National Communications Forum, Chicago, IL, vol. 43, No. 1, Oct. 1989, 4 pages.
Harvey, Dean E. et al., "Call Center Solutions," AT&T Technical Journal, vol. 70, No. 5, 10 pages, Sep./Oct. 1991.
Held, Gilbert, "Voice Over Data Networks," McGraw Hill, Texas, 1998, 16 pages.
Henderson, Shane G. et al., "Rostering by Interating Integer Programming and Simulation," Proceedings of the 1998 Winter Simulation Conference, Washington D.C., Dec. 13, 1998, 7 pages.
Hofmann, Peter. et al., "@INGate: Integrating Telephony and Internet," IEEE Conference on Protocols for Multimedia Systems, 4 pages, Nov. 1997.
House, Eric, "How to Munge Outgoing From: Field When Using Mail?," Google Discussion Group, Apr. 2, 1997, 1 page.
Hu, Michael Junke et al., "An Object-Relational Database System for the Interactive Multimedia," IEEE International Conference on Intelligent Processing Systems, pp. 1571-1575, Oct. 1997.
International Preliminary Examination Report for PCT/US01/13313, dated Apr. 22, 2002, 4 pages.
International Preliminary Examination Report for PCT/US01/40267, dated Dec. 9, 2002, 4 pages.
International Preliminary Examination Report for PCT/US96/16919, dated Feb. 18, 1998, 18 pages.
International Preliminary Examination Report for PCT/US97/01469, dated Oct. 14, 1998, 8 pages.
International Preliminary Examination Report for PCT/US97/11881, dated Mar. 27, 1998, 3 pages.
International Preliminary Examination Report for PCT/US98/00631, dated Sep. 10, 1999, 7 pages.
International Preliminary Examination Report for PCT/US98/02847, dated Jul. 9, 1999, 5 pages.
International Preliminary Examination Report for PCT/US98/13644, dated Jan. 12, 2000, 6 pages.
International Preliminary Examination Report for PCT/US98/18646, dated Oct. 30, 2000, 5 pages.
International Preliminary Examination Report for PCT/US98/18789, dated Dec. 30, 1999, 6 pages.
International Preliminary Examination Report for PCT/US98/22527, dated Jun. 30, 2000, 5 pages.
International Preliminary Examination Report for PCT/US99/12841, dated Jan. 22, 2001, 5 pages.
International Preliminary Examination Report for PCT/US99/25308, dated Sep. 10, 2000, 3 pages.
International Preliminary Examination Report for PCT/US99/25309, dated May 8, 2001, 4 pages.
International Preliminary Report on Patentability for PCT/US2005/027544, dated May 22, 2007, 7 pages.
International Search Report and Written Opinion for PCT/US2009/068402, dated Mar. 31, 2010, 10 pages.
International Search Report for PCT/US00/00781, dated Apr. 12, 2000, 2 pages.
International Search Report for PCT/US00/00785, dated Oct. 2, 2000, 2 pages.
International Search Report for PCT/US00/023066, dated Oct. 30, 2000, 1 page.
International Search Report for PCT/US00/27982, dated Jan. 31, 2001, 3 pages.
International Search Report for PCT/US00/27983, dated Mar. 19, 2001, 2 pages.
International Search Report for PCT/US00/27984, dated Mar. 22, 2001, 1 page.
International Search Report for PCT/US01/07457, dated Aug. 30, 2001, 1 page.
International Search Report for PCT/US01/13313, dated Jul. 6, 2001, 1 page.
International Search Report for PCT/US01/40267, dated Jul. 17, 2001, 1 page.
International Search Report for PCT/US02/23080, dated Oct. 1, 2002, 1 page.
International Search Report for PCT/US03/41677, dated Apr. 10, 2006, 1 page.
International Search Report for PCT/US05/27544, dated Jun. 14, 2006, 1 page.
International Search Report for PCT/US96/16919, dated Jun. 2, 1997, 3 pages.
International Search Report for PCT/US97/01469, dated Apr. 14, 1997, 1 page.
International Search Report for PCT/US97/05457, dated Jun. 24, 1997, 2 pages.
International Search Report for PCT/US97/11881, dated Oct. 24, 1997, 1 page.
International Search Report for PCT/US98/00631, dated Jun. 18, 1998, 1 page.
International Search Report for PCT/US98/01158, dated Jul. 17, 1998, 1 page.
International Search Report for PCT/US98/02152, dated Jun. 25, 1998, 1 page.
International Search Report for PCT/US98/02847, dated Aug. 6, 1998, 1 page.
International Search Report for PCT/US98/02848, dated Aug. 11, 1998, 1 page.
International Search Report for PCT/US98/02923, dated Aug. 19, 1998, 1 page.
International Search Report for PCT/US98/06334, mailed Sep. 1, 1998, 2 pages.
International Search Report for PCT/US98/10357, dated Jan. 14, 1999, 1 page.
International Search Report for PCT/US98/11442, dated Oct. 21, 1998, 2 pages.
International Search Report for PCT/US98/13644, dated Apr. 21, 1999, 2 pages.
International Search Report for PCT/US98/18646, dated Jan. 29, 1999, 2 pages.
International Search Report for PCT/US98/18789, dated Jan. 29, 1999, 3 pages.
International Search Report for PCT/US98/18833, dated Nov. 19, 1998, 1 page.
International Search Report for PCT/US98/18874, dated Jan. 29, 1999, 1 page.
International Search Report for PCT/US98/18989, dated Jan. 25, 1999, 1 page.
International Search Report for PCT/US98/22527, dated Apr. 2, 1999, 2 pages.
International Search Report for PCT/US98/22555, mailed Mar. 3, 1999, 1 page.
International Search Report for PCT/US98/22600, mailed Jun. 4, 1999, 1 page.
International Search Report for PCT/US98/22935, mailed Apr. 14, 1999, 1 page.
International Search Report for PCT/US99/02812, mailed May 11, 1999, 1 page.

(56) **References Cited**

OTHER PUBLICATIONS

International Search Report for PCT/US99/02814, mailed Jun. 17, 1999, 1 page.
International Search Report for PCT/US99/02822, mailed Aug. 18, 1999, 1 page.
International Search Report for PCT/US99/03038, mailed Apr. 23, 1999, 1 page.
International Search Report for PCT/US99/03039, mailed May 11, 1999, 1 page.
International Search Report for PCT/US99/12700, mailed Nov. 30, 1999, 1 page.
International Search Report for PCT/US99/12781, mailed Sep. 9, 1999, 2 pages.
International Search Report for PCT/US99/12841, mailed Sep. 10, 1999, 2 pages.
International Search Report for PCT/US99/20259, dated Feb. 15, 2000, 1 page.
International Search Report for PCT/US99/20387, dated Dec. 7, 1999, 2 pages.
International Search Report for PCT/US99/20461, dated Dec. 23, 1999, 2 pages.
International Search Report for PCT/US99/25117, dated Nov. 1, 2000, 2 pages.
International Search Report for PCT/US99/25265, dated Feb. 18, 2000, 1 page.
International Search Report for PCT/US99/25308, dated Feb. 3, 2000, 1 page.
International Search Report for PCT/US99/25309, dated Feb. 10, 2000, 1 page.
International Search Report for PCT/US99/25310, dated Feb. 10, 2000, 1 page.
International Search Report for PCT/US99/26619, dated Mar. 17, 2000, 1 page.
International Search Report for PCT/US99/26659, dated Feb. 4, 2000, 1 page.
International Search Report for PCT/US99/29043, dated Mar. 20, 2000, 1 page.
International Search Report for PCT/US99/29044, dated May 11, 2000, 1 page.
International Written Opinion for PCT/US98/22527, mailed Dec. 27, 1999, 5 pages.
Japanese Interrogation and Re-Examination Report for Application No. 1999-502827, mailed Oct. 26, 2004, 7 pages.
Japanese Office Action for Application No. 1997-527811, mailed Oct. 10, 2000, 6 pages.
Japanese Office Action for Application No. 1998-505335, mailed Mar. 5, 2002, 7 pages.
Japanese Office Action for Application No. 1998-531244, mailed Jan. 6, 2004, 4 pages.
Japanese Office Action for Application No. 1998-531244, mailed Sep. 10, 2002, 5 pages.
Japanese Office Action for Application No. 1998-536740, mailed Feb. 24, 2004, 5 pages.
Japanese Office Action for Application No. 1998-536740, mailed Sep. 3, 2002, 14 pages.
Japanese Office Action for Application No. 1999-500765, mailed Feb. 10, 2004, 6 pages.
Japanese Office Action for Application No. 1999-500765, mailed Sep. 3, 2002, 11 pages.
Japanese Office Action for Application No. 1999-502827, mailed Dec. 3, 2002, 4 pages.
Japanese Office Action for Application No. 1999-502827, mailed May 28, 2002, 3 pages.
Japanese Office Action for Application No. 1999-502827, mailed Nov. 1, 2005, 8 pages.
Japanese Office action for Application No. 2000-220082, mailed on Apr. 1, 2003, 3 pages.
Japanese Office Action for Application No. 2000-511299, mailed Feb. 3, 2004, 4 pages.
Japanese Office Action for Application No. 2000-511299, mailed May 16, 2006, 7 pages.
Japanese Office Action for Application No. 2000-512333, mailed Sep. 3, 2002, 6 pages.
Japanese Office Action for Application No. 2000-512334, mailed Sep. 10, 2002, 9 pages.
Japanese Office Action for Application No. 2000-512336, mailed Jul. 23, 2002, 8 pages.
Japanese Office Action for Application No. 2000-512336, mailed Jun. 24, 2003, 4 pages.
Japanese Office Action for Application No. 2000-514448, mailed Sep. 3, 2002, 10 pages.
Japanese Office Action for Application No. 2000-519541, dated May 16, 2005, 4 pages.
Japanese Office Action for Application No. 2000-519541, mailed Aug. 20, 2002, 10 pages.
Japanese Office Action for Application No. 2000-519541, mailed Dec. 2, 2003, 7 pages.
Japanese Office Action for Application No. 2000-519541, mailed Mar. 14, 2006, 6 pages.
Japanese Office Action for Application No. 2000-522718, mailed Sep. 10, 2002, 9 pages.
Japanese Office Action for Application No. 2000-531822, mailed Sep. 24, 2002, 6 pages.
Japanese Office Action for Application No. 2000-531940, mailed Dec. 3, 2002, 4 pages.
Japanese Office Action for Application No. 2000-532958, mailed Aug. 20, 2002, 7 pages.
Japanese Office Action for Application No. 2000-554115, dated Apr. 27, 2005, 5 pages.
Japanese Office Action for Application No. 2000-554115, mailed Jan. 6, 2004, 4 pages.
Japanese Office Action for Application No. 2000-554115, mailed Oct. 1, 2002, 5 pages.
Japanese Office Action for Application No. 2000-556311, mailed Oct. 21, 2003, 6 pages.
Japanese Office Action for Application No. 2000-570673, dated Oct. 4, 2005, 4 pages.
Japanese Office Action for Application No. 2000-570673, mailed Mar. 8, 2005, 6 pages.
Japanese Office Action for Application No. 2000-570673, mailed Oct. 14, 2003, 6 pages.
Japanese Office Action for Application No. 2000-570677, mailed May 11, 2004, 8 pages.
Japanese Office Action for Application No. 2000-570677, mailed Nov. 30, 2004, 10 pages.
Japanese Office Action for Application No. 2000-570941, mailed Oct. 7, 2003, 6 pages.
Japanese Office Action for Application No. 2000-578753, mailed May 11, 2004, 11 pages.
Japanese Office Action for Application No. 2000-580124, mailed Apr. 12, 2005, 6 pages.
Japanese Office Action for Application No. 2000-580124, mailed Oct. 7, 2003, 5 pages.
Japanese Office Action for Application No. 2000-580329, mailed Feb. 15, 2005, 8 pages.
Japanese Office Action for Application No. 2000-580329, mailed May 13, 2008, 8 pages.
Japanese Office Action for Application No. 2000-580329, mailed Oct. 4, 2005, 5 pages.
Japanese Office Action for Application No. 2000-581781, mailed Feb. 3, 2004, 4 pages.
Japanese Office Action for Application No. 2000-581781, mailed Oct. 8, 2002, 4 pages.
Japanese Office Action for Application No. 2000-590363, mailed Apr. 1, 2003, 6 pages.
Japanese Office Action for Application No. 2001-526724, mailed Aug. 1, 2006, 5 pages.
Japanese Office Action for Application No. 2001-526724, mailed Dec. 13, 2005, 5 pages.
Japanese Office Action for Application No. 2001-526724, mailed May 17, 2005, 4 pages.

(56) **References Cited**

OTHER PUBLICATIONS

Japanese Office Action for Application No. 2006-127262, mailed Jun. 1, 2010 (5 pages).
Japanese Office Action for Application No. 2006-127262, mailed Nov. 18, 2008 (7 pages).
Japanese Office Action for Application No. 2011-543586, mailed Jan. 24, 2013, 5 pages.
Japanese Office Action for Application No. 532950, dated Dec. 17, 2002, 6 pages.
Katz, Michael, "When CTI Meets the Internet," Telecommunications, vol. 31, No. 7, Jul. 1997, 6 pages.
Kaufman, Harvey, "Call Centers in Cyberspace," Communications News, vol. 34, Issue 7, Jul. 1997, 4 pages.
Kaukonen, S., et al., "Agent-Based Conferencing Using Mobile IP-Telephony," Proceedings of Multimedia Signal Processing, 1999, 6 pages.
Korean Office Action for Application No. 10-2011-7016735, dated Jun. 13, 2013, 3 pages.
Korean Office Action for Application No. 10-2011-7017067, dated Aug. 21, 2012, 9 pages.
Kramer, Brian, "How to Send a File to the Sender of a Message?," Google Discussion Group, May 27, 1994, 5 pages.
Lee, Chien-I, et al., "A New Storage and Retrieval Method to Support Editing Operations in a Multi-Disk-based Video Server," Fourth International Conference on Parallel and Distributed Information Systems, IEEE, Miami Beach, FL, Dec. 1996, 10 pages.
Lin, Yi-Bing et al., "A Flexible Graphical User Interface for Performance Modeling," Software—Practice and Experience, vol. 25(2), Feb. 1995, 24 pages.
Low, Colin, "The Internet Telephony Red Herring," Global Telecommunications Conference, Nov. 1996, 15 pages.
Mackay, Wendy E., et al., "Virtual Video Editing in Interactive Multimedia Applications," Communications of the ACM, vol. 32, No. 7, Jul. 1989, 9 pages.
Malabocchia, Fabio, et al., "Mining Telecommunications Data Bases: An Approach to Support the Business Management," Network Operations and Management Symposium, IEEE, vol. 1, Feb. 1998, 9 pages.
Masashi, Tsuboi et al., "Computer Telephony Integration System," CTSTAGE, Oki Electric Research and Development, 174, vol. 64, No. 2, Apr. 1, 1997, 10 pages.
Matsumoto, Akihiko, "Bank CTI/Call Center Using Up Customer Information, Analysis of Six Major Manufacturers' Solutions," Network Computing, Ric Telecom Corporation, Japan, vol. 10, No. 10, Oct. 1, 1998, 13 pages.
Matsuo, Yasunori, "Microsoft Project for Windows 95," Nikkei Personal Computing, Nikkei Business Publications, Inc., No. 255, Dec. 18, 1995, 2 pages.
Beck, C. et al., Interactive process of operating system for multimedia communication center, Genesys Telecom Lab, Inc. 2014, 3 pages.
Chinese Office action with English Translation for Application No. 200980151937.6 dated May 23, 2014, 7 pages.
U.S. Appl. No. 10/234,691, Neyman et al.
U.S. Appl. No. 08/928,861, Neyman et al.

* cited by examiner

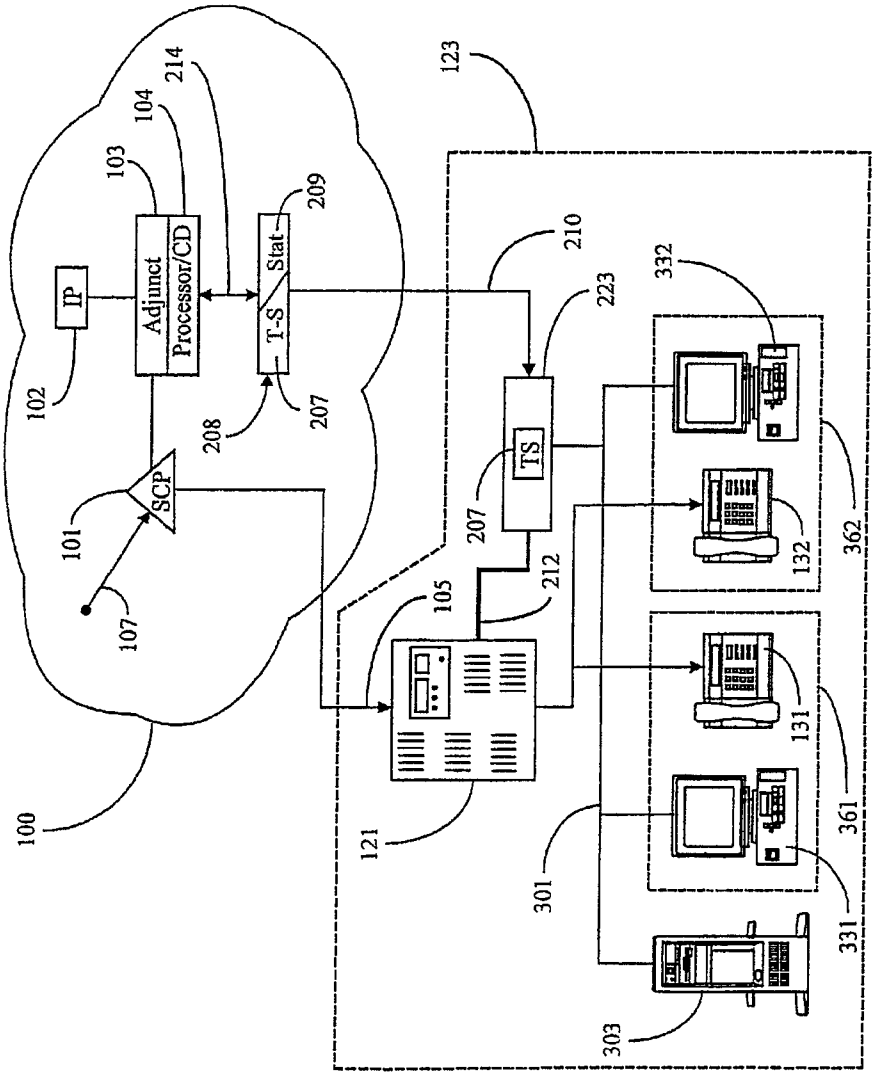
IP
Adjunct
Processor/CD
T-S
Stat
SCP
TS
100
101
102
103
104
105
107
121
123
207
208
209
210
212
214
223
301
303
331
332
361
362
131
132

Fig. 1

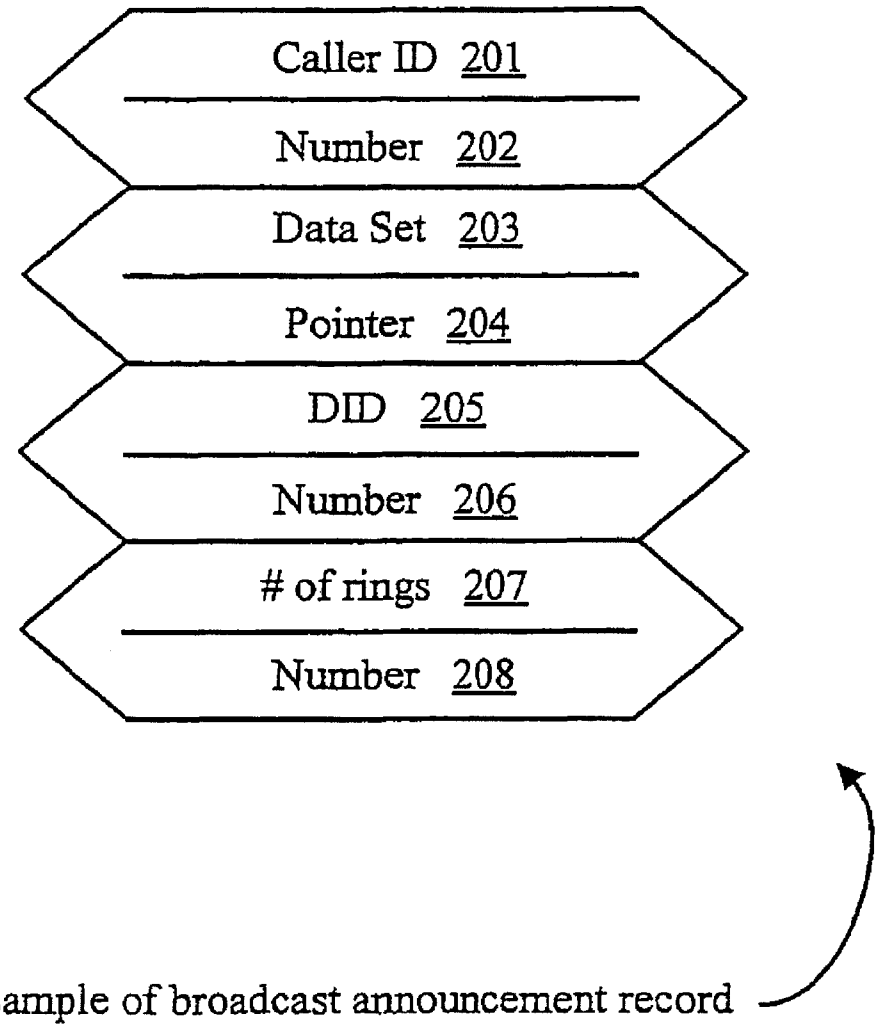
Caller ID 201
Number 202
Data Set 203
Pointer 204
DID 205
Number 206
# of rings 207
Number 208
Sample of broadcast announcement record

Fig. 2

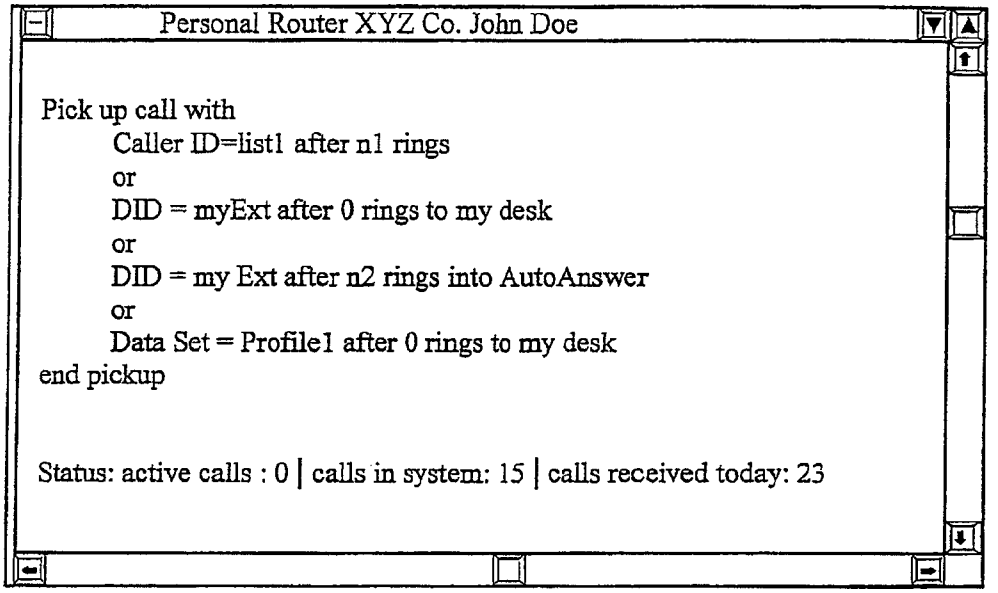

Sample User Interface Screen

Fig. 3

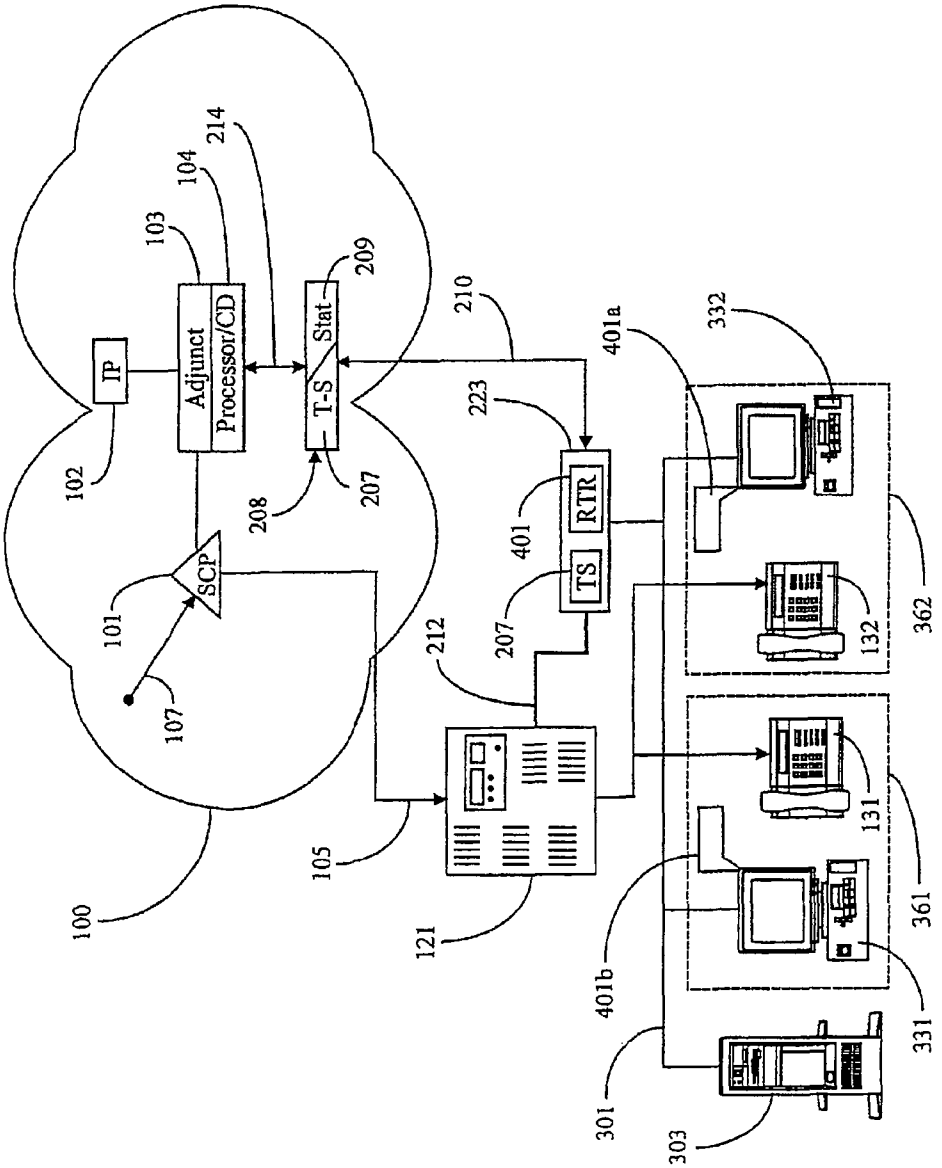
IP
Adjunct
Processor/CD
T-S
Stat
SCP
RTR
TS
100
101
102
103
104
105
107
121
132
131
207
208
209
210
212
214
223
301
303
331
332
361
362
401
401a
401b

Fig. 4

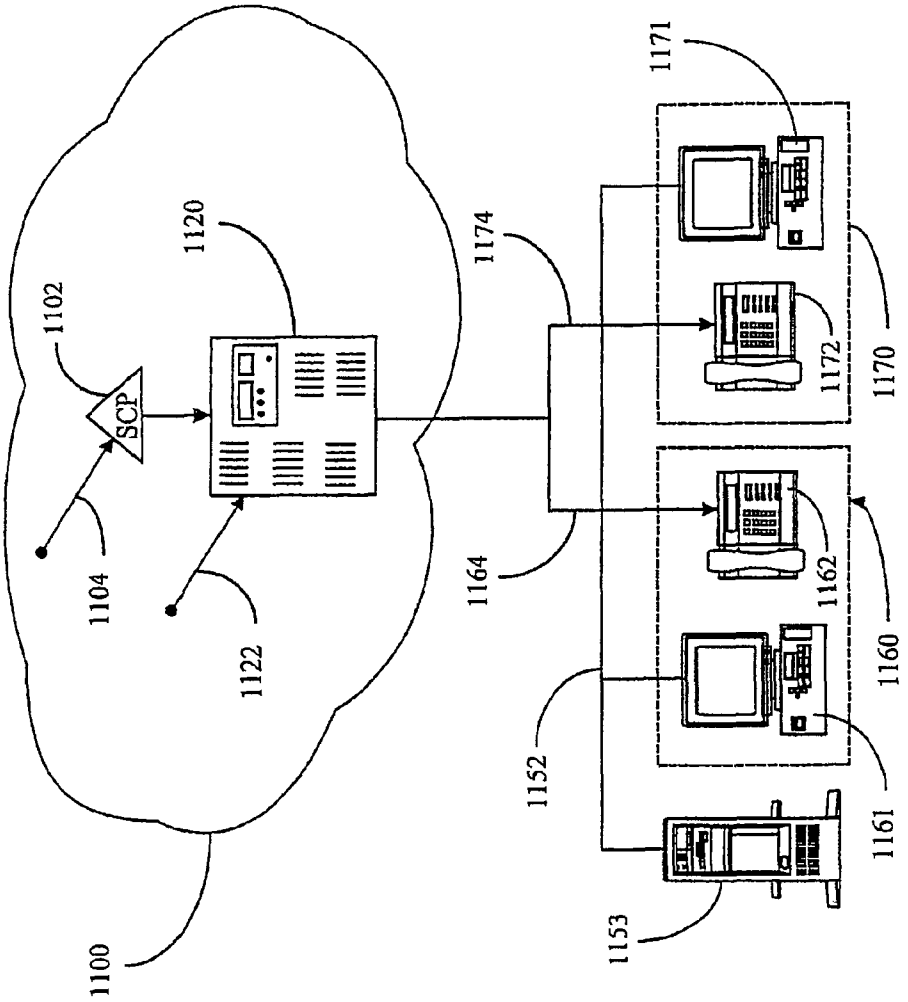

Fig. 5 (Prior Art)

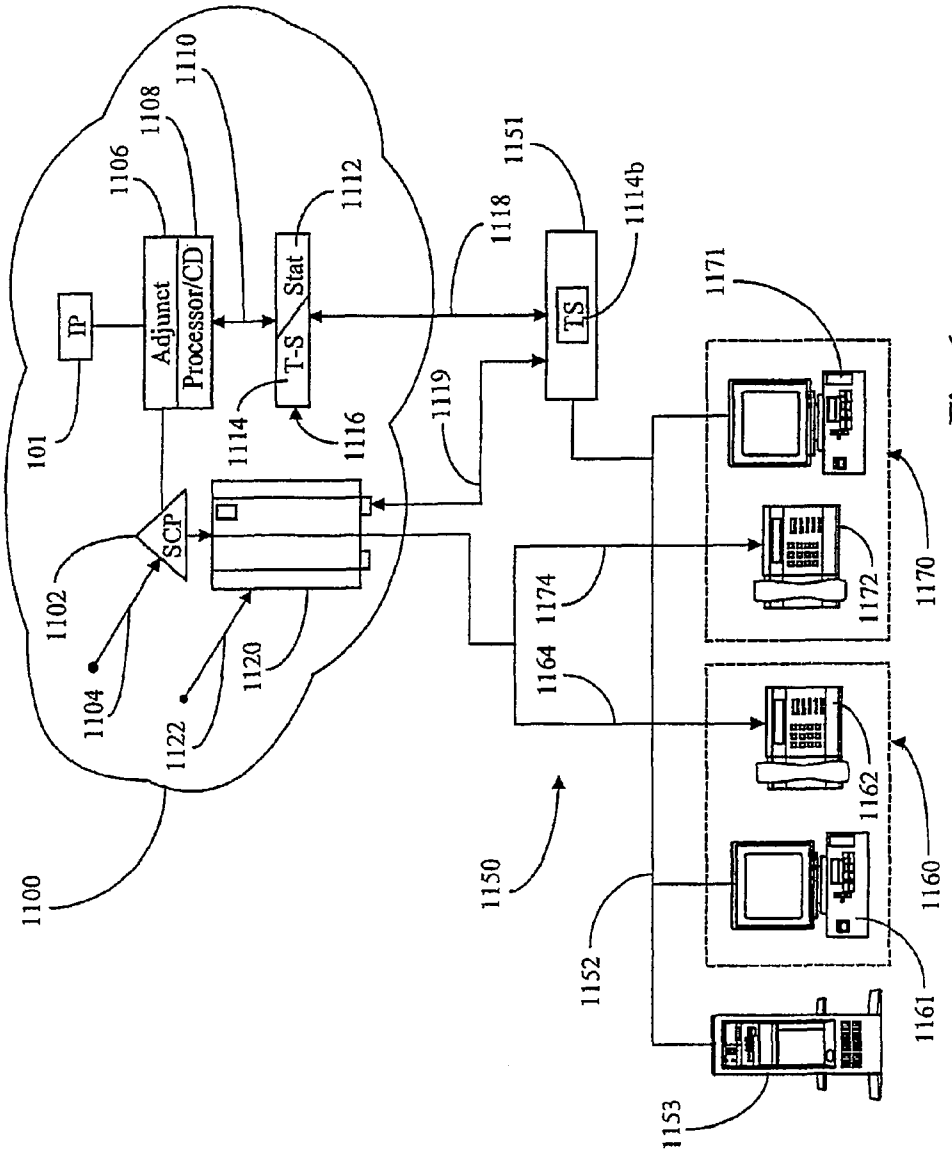
1100
1102
1104
1106
1108
1110
1112
1114
1114b
1116
1118
1119
1120
1122
1150
1151
1152
1153
1160
1161
1162
1164
1170
1171
1172
1174
101
IP
Adjunct
Processor/CD
SCP
T-S
Stat
TS

Fig. 6

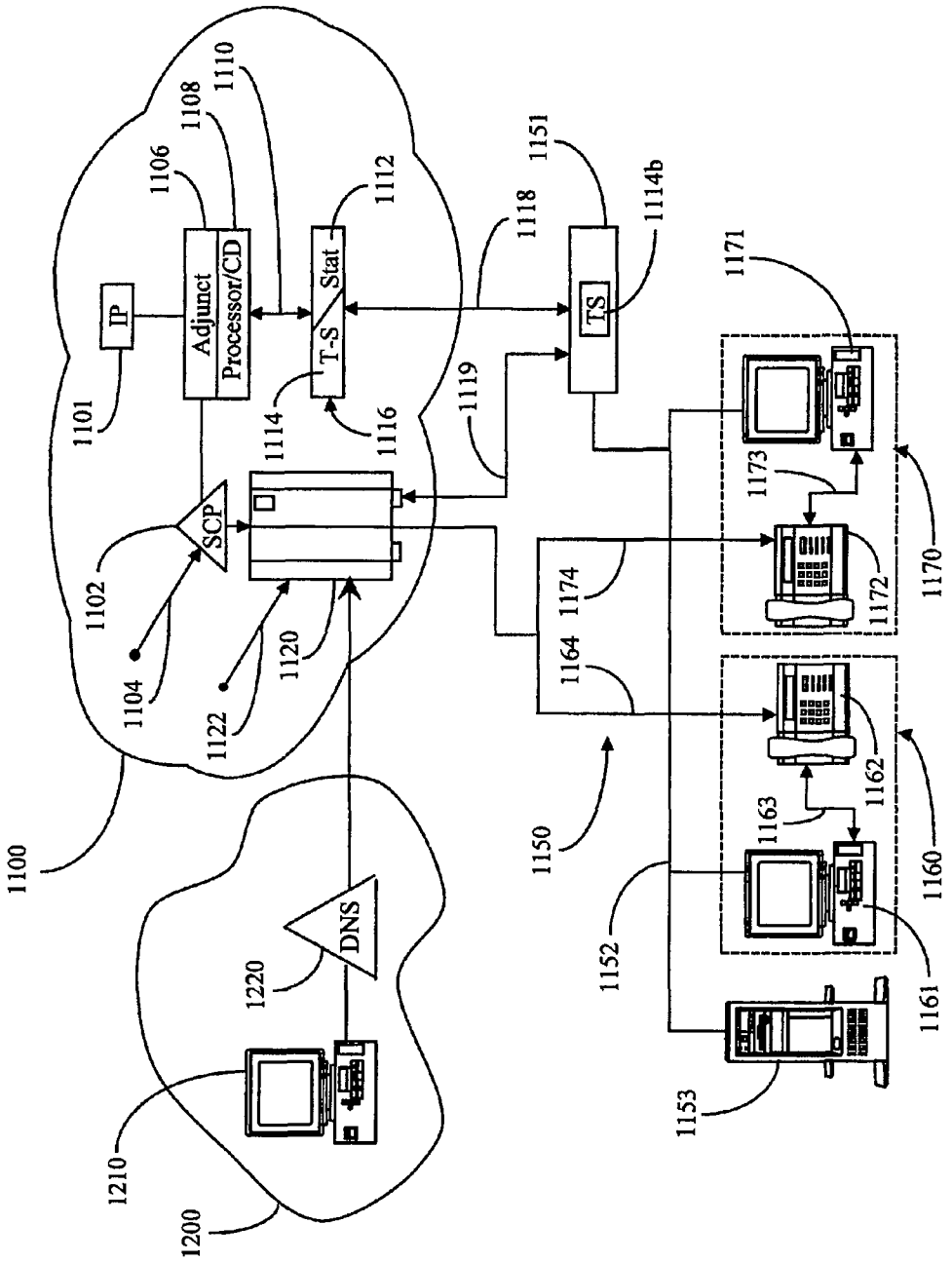
1100
1101
IP
1102
SCP
1104
1106
Adjunct
Processor/CD
1108
1110
1112
T-S
Stat
1114
1116
1118
1119
1120
1122
1150
1151
TS
1114b
1152
1153
1160
1161
1162
1163
1164
1170
1171
1172
1173
1174
1200
1210
1220
DNS

Fig. 7

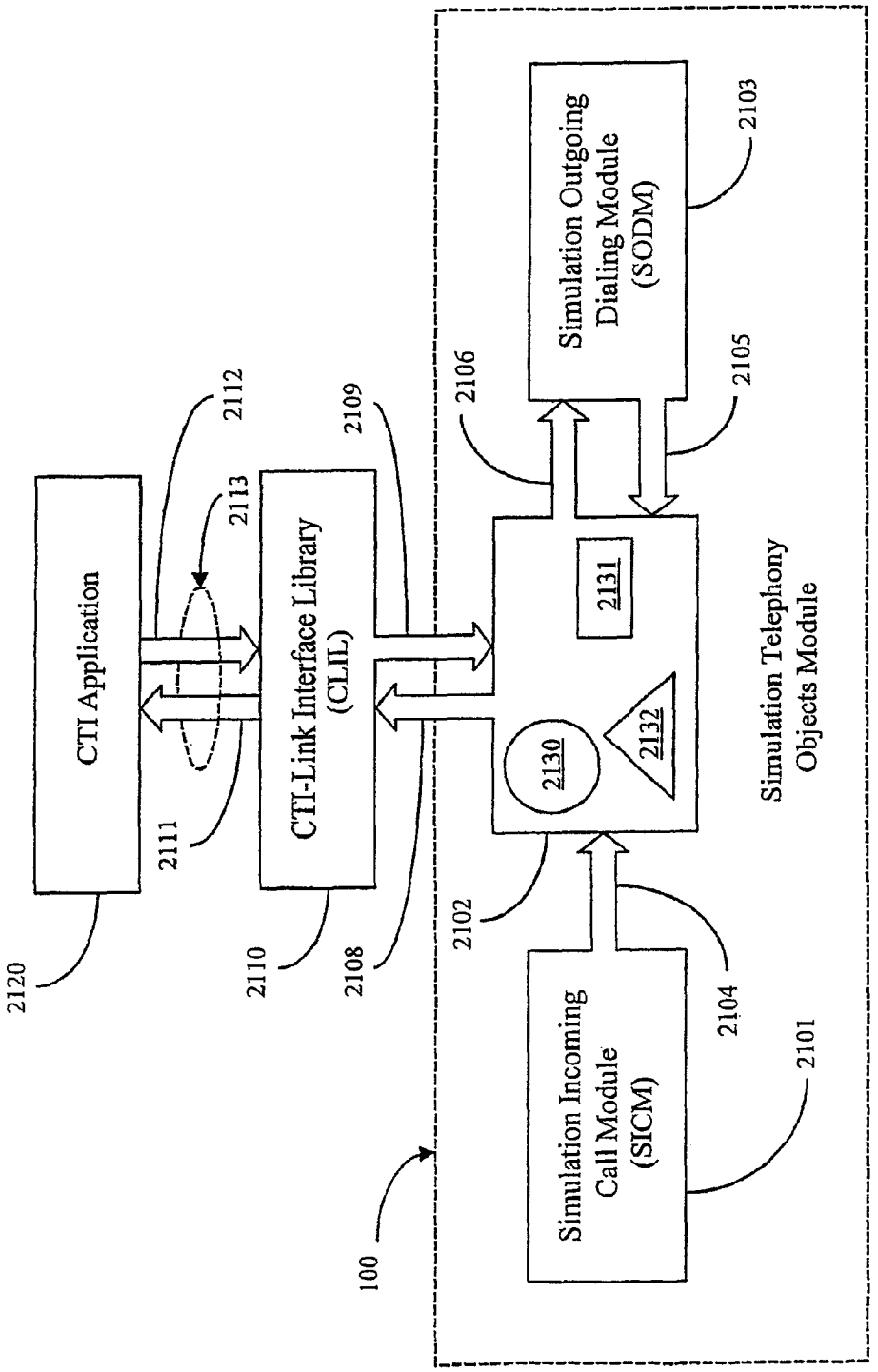
CTI Application
CTI-Link Interface Library (CLIL)
Simulation Outgoing Dialing Module (SODM)
Simulation Incoming Call Module (SICM)
Simulation Telephony Objects Module
2131
2130
2132
2120
2111
2113
2112
2110
2108
2109
2106
2105
2103
2102
2104
2101
100

Fig. 8

CALL AND DATA CORRESPONDENCE IN A CALL-IN CENTER EMPLOYING VIRTUAL RESTRUCTURING FOR COMPUTER TELEPHONY INTEGRATED FUNCTIONALITY

Matter enclosed in heavy brackets [ ] appears in the original patent but forms no part of this reissue specification; matter printed in italics indicates the additions made by reissue; a claim printed with strikethrough indicates that the claim was canceled, disclaimed, or held invalid by a prior post-patent action or proceeding.

CROSS-REFERENCE TO RELATED DOCUMENTS

The present application is *a reissue patent application of U.S. Pat. No. 7,903,807 filed on May 11, 2004 as patent application Ser. No. 10/843,802, which is* a continuation application of patent application Ser. No. 10/234,691, filed Sep. 3, 2002, now U.S. Pat. No. 6,735,298, which is a continuation application of patent application Ser. No. 08/949,566, filed Oct. 14, 1997, now U.S. Pat. No. 6,480,600, which is a divisional application of patent application Ser. No. 08/928,861, filed Sep. 12, 1997, now U.S. Pat. No. 7,031,442. *U.S. Pat. No. 7,903,807 filed on May 11, 2004 as patent application Ser. No. 10/843,802 is also a continuation application of patent application Ser. No. 08/928,861, filed Sep. 12, 1997, now U.S. Pat. No. 7,031,442*, which is a Continuation-In-Part (CIP) of prior patent application Ser. No. 08/869,815, filed Jun. 4, 1997, now U.S. Pat. No. 6,148,074, which is a CIP of patent application Ser. No. 08/802,667, filed Feb. 19, 1997, now U.S. Pat. No. 6,201,863, which is a CIP of patent application Ser. No. 08/797,420, filed Feb. 10, 1997, now U.S. Pat. No. 6,185,291. [The present application] *Application Ser. No. 08/928,861, filed Sep. 12, 1997, now U.S. Pat. No. 7,031,442,* is also a CIP of application Ser. No. 08/833,340, filed Apr. 3, 1997, now U.S. Pat. No. 6,560,328 and *a CIP of* application Ser. No. 08/891,675, filed Jul. 9, 1997, now U.S. Pat. No. 6,205,412.

FIELD OF THE INVENTION

The present invention is in the area of telephone call processing and switching, and pertains more particularly to intelligent call-routing systems, and equipment and methods for customizing and personalizing Routing Rules and Protocol.

BACKGROUND OF THE INVENTION

Telephone call processing and switching systems are, at the time of the present patent application, relatively sophisticated, computerized systems, and development and introduction of new systems continues. Much information on the nature of such hardware and software is available in a number of publications accessible to the present inventor and to those with skill in the art in general. For this reason, much minute detail of known systems is not reproduced here, as to do so would obscure the facts of the invention.

One document which provides considerable information on intelligent networks is "ITU-T Recommendation Q.1219, Intelligent Network User's Guide for Capability Set 1", dated April, 1994. This document is incorporated herein by reference.

At the time of filing the present patent application there continues to be remarkable growth in telephone routing systems, with routing done both at or near point-of origin of incoming calls, and at call destinations. For example, systems are known to the present inventor that perform initial call processing before routing an incoming call to a destination switch, and further routing is done at the call destination in computerized telephony equipment, often termed customer premises equipment (CPE). The present invention pertains most particularly to routing at customer premises.

There are, at the time of the present patent application a considerable range of CPE systems available for use from various manufacturers, and, as state-of-the-art routing systems are typically computerized, there is a broad variety of software available for such systems as well. It is the software in general wherein routing rules are set, and the routing rules determine the decision-making paths a system follows in routing calls.

In current art, although there are widely varying systems in the art relative to routing rules, all such systems exhibit a common drawback. Typically such systems, once set up (programmed) to follow certain routing rules and practices, cannot easily vary, and individual users or groups of users, cannot change the rules arbitrarily. To tinker with the routing rules in CPE typically requires a highly-trained maintenance technician (system administrator).

What is clearly needed is method and apparatus which allows an individual user of a routing system, or a group of users, to alter and customize the routing rules of the system for particular purposes, which may change from time to time, depending on the users.

SUMMARY OF THE INVENTION

In a preferred embodiment of the present invention a telephony call-in center is provided, comprising a plurality of agent stations, individual ones of the agent stations having a telephone and a computer platform including a video display unit (VDU), the telephone and computer platform connected by a Telephone Application Programming Interface (TAPI)-compliant data link; a local area network (LAN) connecting at least some of the computer platforms at the agent stations; and a first computer processor connected on the LAN, having a wide area network connection (WAN) adapted to receive computer-simulated telephone calls, and having access to a database. The computer platform is adapted to retrieve origination data for incoming calls to the telephone, and to use the origination data to correlate the caller with further data retrieved from the database for display on the VDU. In some embodiments the the first computer processor is adapted to service calls from specific Service Control Points (SCPs) and to block display of data at agent station VDUs for any call not identified as originating at one of the specific SCPs.

In preferred embodiments the computer platforms are adapted to report the origination data to the first processor, and the first processor is adapted to correlate the caller with further data retrieved from the database for display on the VDU.

In an alternative embodiment a telephone call-routing system is provided, comprising a call-in center comprising a plurality of agent stations, individual ones of the agent stations having a telephone and a computer platform including a video display unit (VDU), the telephone and the computer platform connected by a Telephone Application Programming Interface (TAPI)-compliant bridge, with a plurality of the computer workstations connected to one another, to a first processor, and to a database on a local area network (LAN); and a call-routing center comprising a telephony switch adapted to switch telephone calls to the telephones at the

call-in center and a processor adapted to route computer-simulated telephone calls to the computer platforms at the agent stations. In this embodiment the computer workstation is adapted to retrieve origination data for incoming calls, both conventional telephony and computer-simulated, and to report the origination data to the first processor, and wherein the first processor is adapted to use the origination data to correlate the caller with further data retrieved from the database for display on the VDU. IN some instances the first processor is adapted to service calls from specific Service Control Points (SCPs) and to block display of data at agent station VDUs for any call not identified as originating at one of the specific SCPs.

In yet another embodiment an agent station for a call-in center is provided, comprising a computer platform having a local area network (LAN) adapter, the computer platform adapted for receiving and processing computer-simulated telephone calls; a telephone having a telephone line port; and a Telephone Application Programming Interface (TAPI)-compliant bridge connecting the computer workstation and the telephone. The computer workstation is adapted to retrieve origination data for calls, both calls to the telephone and computer-simulated calls to the computer platform, and to report the origination data on a LAN via the LAN adapter to a processor connected to the LAN.

In still another embodiment a method for correlating displayed data with incoming conventional telephone and computer-simulated telephone calls at a call-in center is provided, comprising steps of (a) connecting individual telephones at the call-in center by a Telephone Application Programming Interace (TAPI)-compliant bridge to individual computer platforms; (b) connecting each telephone-connected computer workstation on a local area network (LAN) to a processor connected on the LAN, the processor having access to a database storing data to be displayed; (c) monitoring origination information of incoming calls by the computer workstations; (d) providing the origination information over the LAN to the LAN-connected processor; and (e) using the origination information via the processor to correlate data to be displayed with the incoming calls.

In the various embodiments of the invention described in enabling detail below, call centers without call-switching apparatus and capable of also processing computer-simulated calls are enabled, while also providing means of correlating stored data pertaining to callers with calls to agent stations, displaying the data on VDUs at the agent stations while calls are in progress.

BRIEF DESCRIPTION OF THE DRAWING FIGURES

FIG. **1** is a system diagram of a call-routing system in an embodiment of the present invention.

FIG. **2** is a sample of a broadcast announcement record in an embodiment of the present invention.

FIG. **3** is a sample user interface screen in an embodiment of the present invention.

FIG. **4** is a system diagram of a call-routing system implemented in client-server mode in an embodiment of the present invention.

FIG. **5** is a block diagram of a call-routing system in the prior art.

FIG. **6** is a block diagram of a call-routing and call-in system according to embodiments of inventions known to the present inventors.

FIG. **7** is a block diagram of a call and information routing and call-center system according to an embodiment of the present invention.

FIG. **8** is a block diagram depicting a simulated system according to a preferred embodiment of the present invention.

DESCRIPTION OF THE PREFERRED EMBODIMENTS

FIG. **1** is a system diagram of a call-routing system according to a preferred embodiment of the present invention. Dotted lines **123** enclose elements of the system native to a customer's premises (CPE). This equipment in a preferred embodiment comprises a computerized telephony central switch **121** connected by a data link **212** to a processor **223** running an instance of a unique telephony server (T-Server) T-S **207**. Switch **121** in conventional art distributes incoming calls (on line **105**) to connected telephones, such as telephone **131** at a workstation **361** and telephone **132** at a second workstation **362**. In various embodiments of the present invention T-Server **207** running on processor **223** exerts controlling influence on routing of incoming calls, as is described in further detail below.

In various embodiments of the present invention each workstation (**361**, **362**) has a PC with a video display, such as PC/VDU **331** at workstation **361** and PC/VDU **332** at workstation **362**. There will be in most architectures many more than the two telephone workstations shown, each with an associated PC, but two are considered adequate by the inventors to illustrate embodiments of the present invention.

PC/VDUs **331** and **332** in various embodiments are connected on a local area network (LAN) **301** which also connects to a data file server **303** and to processor **223** running an instance of T-Server **207**. The arrangement of PC/VDU plus telephone at each workstation is a common arrangement for many company facilities, and has become more common as more and more people become computer literate. Moreover, many companies are actively training employees in use of computers, and providing PC-type computer equipment, usually interconnected by company LAN, for employees to use.

In the exemplary system shown, calls may originate at any remote call-in point, which is represented in FIG. **1** by region **100**, referred to herein as the network cloud. Network cloud **100** may be a small regional portion of the world-wide network of connected telephony equipment, or may represent the entire world-wide network. An incoming call at any point in network cloud **100** is represented by vector **107** to service control point (SCP) **101** (typically a telephony central switch), which in this example is connected to an adjunct processor **103** and coupled thereby to an intelligent peripheral (I-P) **102**, a distribution processor **104** and a processor **208** running a second instance of unique T-Server **207** as well as a statistical server (stat-server) **209**. In this system calls are forwarded to switch **121** at the customer premises equipment over telephone line **105**, and associated data is forwarded in parallel to processor **223** over a digital network link **210**. Such systems, wherein data associated with a call is forwarded on a separate link from the call itself, are, to the inventor's knowledge at the time of the present patent application, not known in the art, but are known to the inventor. This feature, however, is not required in practice of the present invention, but preferred in some embodiments.

In embodiments of the present invention a call originating in the network cloud and routed to switch **121**, destined for one of telephones **131** or **132** or to another destination at the customer's premises, typically carries a destination number, which may include a direct inward dialing (DID) feature,

whereby a limited number of lines may be used to carry calls to a larger number of final destinations, accomplished principally by software techniques. Destination may also be to a virtual number, of which many may be programmed, and T-Server **207** may be adapted to further route calls forwarded to such virtual numbers. The phone call may also have caller ID attached (originating caller's phone number), and in those cases wherein a separate network digital data link is accomplished between processors at the origination end (**208**) and the customer's premises (**223**) cases a data packet associated with the call may be forwarded over link **210**. Also, T-S **207**, which interacts continuously with switch **121** in this embodiment, is capable of transacting with data file server **303**, given caller ID and/or other data associated with a call, to retrieve further information about the caller from data file server **303**.

It will be apparent to those with skill in the art that incoming calls are not limited to two telephones as shown in FIG. **1**. There may be many more than two telephones connected to switch **121**, other telephony equipment, such as facsimile equipment and data lines may also be connected and involved in routing decisions and transactions according to embodiments of the present invention. Moreover, existing techniques, such as virtual expansion for routing calls with a certain number to multiple destinations on some pre-programmed protocol may also be involved. The simple diagram of a switch with two telephones connected is meant to be illustrative for description of embodiments of the present invention.

It will be apparent to those with skill in the art as well, that a separate processor shown as processor **223** in FIG. **1**, is not strictly required in embodiments of the invention, depending on the level of machine intelligence and sophistication of switch **121**. Switches for customer premises continue to be developed with new levels of intelligent capability, and some may be capable of interacting with other elements of the present invention without a separate processor between the switch and a LAN such as LAN **301**. Processor **223** will be required to practice various embodiments of the invention with many existing telephony switches which may be used as element **121**. In virtually all cases in practicing the present invention, an instance of unique T-Server **207** executing on a computerized platform will be required.

In a preferred embodiment of the present invention routing intelligence is no longer confined to a central location such as telephony switch **121** or T-Server **207** running on a connected processor, but distributed in a manner that individual users of the system may customize routing at their own workstations, using individual PCs. This is accomplished in large part by control code executable at a user's computer workstation. It is not required that the actual code be always at the user's workstation, as it may be shared code resident at, for example a file server on LAN **301**, such as file server **303**. The unique code may be accessed from such a server and executed at any one of several workstations such as workstations **361** and **362** by PC/VDU **331** and PC/VDU **332** respectively. The location of stored code, and access to such code is not, however germane to the invention. In embodiments of the invention, an individual PC executes unique code to provide call-routing control for an individual.

In embodiments of the present invention, T-Server **207** is adapted to cooperate with code executed at individual PCs to route incoming calls. In this unique routing process there are at least two different mechanisms that may be used. In one mechanism, all calls are routed to a single routing point, and each individual routing application registers with that routing point. In this case a record of each call is broadcast on LAN **301**, as will be described more fully below, and filtering occurs at each PC router. In a second mechanism there may be a virtual routing point for each PC using a personal router on the LAN. In this second case there is no need to broadcast call particulars on the LAN. This second alternative is typically more expensive than the first, and there are currently rather severe limitations on how many automatic call distribution (ACD) queues or routing points may be allocated on a typical central switch.

Referring now to FIG. **2**, and presuming the first of the two mechanisms described immediately above, with each incoming call, an overall record of the call, prior to routing, is broadcast on LAN **301**. This overall record can take a number of different forms, of which the example in FIG. **2** is just one exemplary form. In this example the overall record consists of four data portions. One data portion consists of elements **201** and **202**. Data element **201** identifies this portion as the caller ID associated with the incoming call, and element **202** is the caller ID number. A second data portion consists of data elements **203** and **204**. This portion is a data set which may be transmitted via link **210** to processor **223** in parallel with the incoming call, or may be composed partly of data retrieved from server **303**, using other call data as a pointer. Element **203** identifies the data as a data set, and element **204** is the pointer. Similarly elements **205** and **206** constitute a direct inward dialing (DID) number, and elements **207** and **208** fix number of rings.

A central element in the present invention is that a user at an individual PC rims an instance of a personal router application, providing that user with instant and complete control over routing of calls meant for that user (or, in some cases, associated users). The user's PC, such as PC/VDU **331** is connected typically by LAN to a processor such as processor **223**, in turn connected to the central switch, such as switch **121**.

At the computer portion of an individual workstation, such as PC/VDU **331** at workstation **361**, the user has access to the local application which is interactive with code executed at T-Server **207** at processor **223**, to control and customize routing for incoming calls, depending on certain data elements in the broadcast announcement record (FIG. **2**). As a part of this unique capability to program routing responses, the individual user may in some embodiments load to his/her VDU a unique user interface, an example of which is shown in FIG. **3**.

FIG. **3** illustrates a window presentable to a user at an individual workstation, compatible, for example, with Windows operating systems. This is an input and display interface for a personal router, a variation of which may be assigned to each of selected employees to provide these individuals with an ability in conjunction with the premises telephone equipment to customize and periodically adjust the routing of certain incoming calls. In this example, the interface is for company XYZ and limited to employee John Doe.

Through the individual interface, John Doe in this instance, may program in a relatively high-level language, routing preferences for certain incoming calls, according to data broadcast for such calls on LAN **301**. In the case where each user has a dedicated routing point, an incoming call is directed to the individual's computer, and the broadcast is not necessary.

In this example John Doe has programmed his interface to pick up all calls having Caller ID matched with a list "list1" after n1 rings. List1 is resident in John Doe's database associated with his own Personal Router, and John Doe may call up this list and amend, delete, and expand it as he wishes. The number of rings n1 may be any convenient number to accomplish John's purpose.

John Doe may program negative lists as well. Although not specifically recommended, a negative list could be used to hang up on all calls that have an ID associated with a company or individual that has been making harassing calls to an employee, or to shunt such calls to a special tracking program or the like.

John Doe in this instance has also programmed his personal router to send all calls bearing his assigned DID number to the telephone at his desk after 0 rings, and to an answering machine after n2 rings. Associations with data sets may also be made, comparing such data sets to stored profiles and the like. At the bottom of the display in this example a status summary of calls may be provided. A user may choose to have this window resident on his computer screen as a pix-on-pix, or to hide it and call it as needed. Also, it will be apparent to those with skill in the art that it is not strictly required that each selected person having an associated routing interface assigned have a computer at his/her elbow. For those persons not, for one reason or another, inclined to program their own routing, the interface may be called up and done by another, with appropriate access security applied. A secretary or system administrator may perform such functions, using any workstation connected to company LAN **301**.

The user interface at the user's workstation can take any of a variety of forms, and have a variety of functionality. Typically, when the user logs on, his system will be configured to execute the unique application to run in the background, and to monitor for incoming calls at all times the user is present and active. It will be apparent to those with skill in the art that this can be done in a variety of ways. The interface, for example, may be a Graphic User Interface (GUI) wherein icons may be used to represent calls, callers, and other users, and the individual user at one workstation may select to display icons as desired. In this alternative embodiment an incoming call may appear on a user's PC VDU as a small telephone in an announcement bar. Such announcement bars are familiar to those with skill in the art, such as seen on Operating System Desktops, where an e-mail arrival may be indicated by a letter icon and a sound.

In such an embodiment, by moving the screen cursor to the telephone icon, which may be programmed to "ring" or to vibrate as though it is ringing, the user may activate a text balloon announcing the caller ID or other call data, or such data may be displayed directly in the icon. The system can be configured in such an embodiment to allow the user to route the call to his own phone with a click, to hang up with a double click, to drag the call to a holding queue (represented by a basket, for example,) to send the call to an answering machine, which may be done by dragging and dropping the telephone icon to an answering machine icon, to transfer the call to another person by dragging and dropping the telephone icon to an icon representing another user (such as the instant user's secretary or supervisor for example). Those with skill in the art will recognize that the functionality through the use of click and drag-and-drop procedures is very broad indeed.

Actions taken at the personal router interface at an individual PC on LAN **301** in embodiments of the present invention are codified as instructions on the LAN to T-Server **207** (in most cases) running on a processor such as processor **223**, connected to central switch **121**. If an individual user at a workstation, for example, has received an indicator of a waiting call, and has dragged the ringing telephone to his secretary's desk icon in his interface, his personal router interacts with T-Server **207** to instruct switch **121** to reroute the call to the secretary's telephone. In a similar manner, most actions at a personal router become instructions to switch **121**, and in general each user having access to such a personal router can program responses to calls and respond to incoming calls in real time with a broad set of available responses.

In embodiments of the invention, not necessarily all calls are routed by personal routers executed on PCs on LAN **301**. There may also be over-riding routing rules programmed into switch **121**, such that certain calls or types of calls are always handled in a certain way. Rules in switch **121** may also determine the fate of calls that are not eventually routed by personal routers. For example, all calls alive after seven rings may be switched to a recorded announcement, and the like. In this manner a very broad freedom of routing may be accomplished, with security and flexibility to adapt for changes in the organization.

It will be apparent to those with skill in the art that the division of code and functionality between server **303**, T-Server **207** running on processor **223**, and individual workstations on the LAN is somewhat arbitrary, with the requirement that individuals at the workstations have interface access to customize and update personal routing rules.

In another aspect of the present invention a Personal Desktop Router is implemented in a Client-Server architecture. This embodiment is illustrated with the aid of FIG. **4**. In this embodiment a router **401** is provided and executes on processor **223** which also executes an instance of T-Server **207**. Router **401** in this instance is a central router having routing rules divided in sections dedicated to each assigned user or DN on LAN **301**. Unique Client Interface Packages represented by elements **401**a and **401**b are provided at individual workstations such as workstation **361** and workstation **362** connected to LAN **301**. Client Interface Packages **401**a and **401**b are for the purpose of allowing users at the workstations to edit their own personal routing rules, much as has been described above for personal routers according to embodiments of the present invention, wherein the routers execute at the workstations.

In this Client-Server embodiment of the present invention, the actual router software exists and executes as one router **401**. Client Packages **410**a and **410**b may be implemented as a Graphical User Interface (GUI) with iconic drag and drop features as described above with reference to FIG. **1**, or may be of another suitable type designed to allow interaction with router **401**.

It will be apparent to one with skill in the art that router **401**, in this embodiment, is not required to reside in processor **223**, but may reside in any other machine capable of executing the router and connected or coupled to LAN **301**, such as switch **121**. The router could be executed, for example, on a server on the Internet, and accessed by a WEB browser by a client connected to LAN **301**. It will also be apparent to one with skill in the art that while router function does not occur at individual workstations **361** and **362** in this particular embodiment, editing capabilities provided to the user via client packages **401**a and **401**b can remain essentially the same as described in previous embodiments taught herein.

In typical embodiments, router **401** is configured to allow a group manager or system agent to perform higher level configurations to routing rules, such as type of calls available, call parameters, user function or location changes, etc., while individual users may, through their interfaces, configure routing rules for their own calls, within the boundaries set by the supervisor.

It will be apparent to one with skill in the art that any configurational division of editing capabilities may be employed with reference to routing rules as they may exist in any given application without departing from the spirit and scope of the present invention. A server-based router such as router **401** in this embodiment, wherein a unique client pack-

age is provided for editing purposes at a user's workstation, such as workstation **361**, is heretofore unknown to the inventor.

In the embodiment illustrated by FIG. **4** communication over analog lines **105** and data link **210**, and other functions of the system, is essentially the same in method as is illustrated in FIG. **1** and described above with reference to FIG. **1**. Also, network cloud **100** and the components therein are essentially the same as in the embodiment in FIG. **1**. For this reason much detail as to the dynamics of and paths of communication in an embodiment of the present invention with respect to FIG. **4** are not repeated here.

Virtualized Computer-Telephony Integrated Link (3211-3213)

To help create a context for a detailed description of preferred embodiments of the present invention which follow, attention is first directed to FIG. **5**, which is a block diagram of a call-routing system in the prior art. In the system of FIG. **5** a call-in center **1150** is illustrated having two telephones **1162** and **1172**. As was described above in the background section, the present invention is particularly adaptable to such call-in centers wherein a telephony switch is not a part of the equipment at the call-in center, thus no telephony switch is shown in FIG. **5** at call-in center **1150**.

It will be apparent to those with skill in the art that there may be just one phone in call-in center, or there may be several more than the two shown. Two telephones is an arbitrary choice for purposes of illustration and description.

It is common and desirable at call-in centers for agents who man the phones to have at hand a personal computer (PC) or a data terminal of some description including a video display and processor. Access to such a computerized system allows the agent to recall and display data pertaining to a caller, and also other information of use in dealing with and helping caller, such as technical information about products and product use. Although several types of such data terminals are known, PCs are assumed here for purposes of description and illustration. A PC **1161** with a display is shown at hand for an agent using telephone **1162** and a PC **1171** is shown proximate telephone **1172** for use by an agent at telephone **1172**.

In a very simple system there may be just one telephone and one PC proximate the telephone, therefore just a single equipped agent constituting the call-in center. In the system of FIG. **5** having two telephones, there are also two PCs. Each PC and associated telephone is considered here to constitute an agent station. Agent station **1160** comprises telephone **1162** and PC **1161**, and agent-station **1170** comprises telephone **1172** and PC **1171**.

In systems of the sort depicted by FIG. **5**, having two or more agent stations, it is desirable that the PCs be connected in a Local Area Network (LAN), and this connectivity is shown in FIG. **5** with PCs **1161** and **1171** connected on a LAN **1152** wherein a data file server **1153** is also connected. Data file server **1153** in this system is the repository of customer data and the like accessible to agents manning the phones. Though not shown in FIG. **5** it will be apparent to those with skill in the art that there may be other servers on the LAN or elsewhere in the network as known in the art.

Telephone calls in the system of FIG. **5** are provided to telephone **1162** on line **1164** and to telephone **1172** on line **1174** from essentially anywhere represented by network cloud **1100**. Cloud **1100** could represent a relatively small local calling area, a regional area, a single phone company or even the phone system of the entire planet. Calls are forwarded by telephony switches represented by telephony switch **1120**.

Calls **1104** intended specifically for call-in center **1150** typically are received at Service Control Points (SCP) represented by SCP **1102**, which are organized typically with one or more 800 numbers or the like. Calls received and processed at SCP **1102** are forwarded to switch **1120** which routes the calls to whatever area code and number is assigned to telephones **1162** and **1172**. Other calls **1122** may also come into telephony switch **1120** and be routed to call-in center **1150**. As is known in the art, SCP **1102** is also a telephony switch.

Also as is known in the art, there may be equipment associated with SCP **1102** to provided some additional functionality, such as an adjunct processor and an intelligent peripheral. For simplicity's sake these are not shown in FIG. **5**, but FIG. **5** may be considered as typical of many prior art systems. In the rather simple system of the prior art represented by FIG. **5** some data (such as caller ID for example, and Dialed Number Information Service {DNIS}), may be associated with calls forwarded to call-in center **1150**. Such data to be useful in the system of FIG. **5** must be received by specialized equipment, such as familiar caller-ID boxes or telephone sets adapted to use the information being sold to people for home and business use.

Attention is now directed to FIG. **6**, wherein a call-in system known to the present inventors is illustrated. In this system SCP **1102** receiving calls **1104** intended for call-in center **1150** has a connection to an adjunct processor **1106** in communication with both an intelligent peripheral **1101** and a call-distribution processor **1108**. There is further a processor **1116** connected by a two-way communication link to call-distribution processor **1110**. Processor **1116** comprises an instance of a unique application termed by the inventors a Telephony Server **1114**, or T-Server, and a Statistical Server (Stat-Server) **1112**. T-Server **1114** and functions provided by the T-Server are described in detail in the related patent applications listed above and incorporated herein by reference.

In the system of FIG. **6** a processor **1151** is provided at call-in center **1150**, running a second instance of T-Server application **1114**. Processor **1151** is coupled to processor **1116** in network cloud **1100** by a network link **1118**, and to LAN **1152** by a network adapter. There is in addition a CTI connection **1119** between telephony switch **1120** in network cloud **1100** and processor **1151** at call-in center **1150**. CTI connection **1119** may be an ISDN link or other data-type connection allowing transfer of CTI data and commands.

In the system of FIG. **6** information garnered in initial processing with use of IP **1101** may be provided by T-Server **1114** at processor **1116** to T-Server **1114** running on processor **1151** at the call-in center. This data can be used, then, ahead of a routed call, to, for example, to extract further data regarding a caller from a customer data base in file server **1153**, and to provide the transferred and retrieved data at the PC display, such as PC **1161**, proximate the telephone to which a call has been routed, for use by the agent manning that telephone.

Further, CTI transactional data retrieved from switch **1120** (line busy, line available, and the like), may be provided to T-Server **1114** at processor **1116**, and in some cases in raw or processed form to Stat-Server **1112** to be used in routing by CD processor **1108**. Many other functions described in the related applications listed above may now also be accomplished. Still further, Stat-Server **1114** running on processor **1151** can issue CTI commands to switch **1120** in the network cloud via CTI link **1119**.

Although the system of FIG. **6** may be used to provide many CTI **10** functions, there is a great dependence on telephony switch **1120**. Some older switches are not capable of CTI functions and data sharing, and some others are very limited in their functions. Moreover, the organization that provides a call-in center under these circumstances has no control over the switches in the network cloud, and it may not be practical for such an organization to purchase and install an expensive CTI-capable switch on the premises of the call-in center. What is needed is an apparatus and methods that will provide CTI functionality in the absence of a workable CTI link, such as link **1119** in FIG. **2**.

Virtual CTI link

FIG. **7** is a block diagram of a call and information routing and call-center system according to an embodiment of the present invention. The system of FIG. **7** has all of the connectivity and functionality of the system of FIG. **6**, plus a data connection between each telephone in the call-in center and the associated PC. For example, in FIG. **7**, PC **1161** is connected to telephone **1162** by link **1163**, and PC **1171** is connected to telephone **1172** by data link **1173**. Moreover, as previously described, each PC is connected on LAN **1152**, which also connects to file server **1153** and to processor **1151** running an instance of T-Server **1114**.

There are a number of different ways a telephone and PC may be connected, such as by a serial port and circuitry in the telephone and operating code in the PC such that the PC may monitor transactions of the telephone, including on-hook, off-hook, incoming caller-ID, ringing instance, and so forth. The PC via the data link may also exercise control over telephone functions. With this unique connectivity and adaptation, assuming all of the telephones in a call-in center are thus connected and adapted, T-Server **1114** running on processor **1151** may acquire in aggregate all of the information otherwise available from switch **1120** via CTI connection **1119**. T-Server **1114** on processor **1151** may then perform as though a fully workable CTI connection **1119** to switch **1120** is established.

Call and Data Correspondence

One of the important functions performed is identification of callers, retrieval of data relating to callers, and transmittal of such data to be displayed at the PC associated with each telephone at each agent station. The advantage to all is readily apparent. The agent fielding a call is thus more prepared to deal with the caller, and will have information readily at hand.

To provide the call and data display functionality desired it is, of course, necessary that a caller's identity be established and the caller's correct data be retrieved for display. There are some instances in the system depicted in FIG. **7** and described herein, wherein such correspondence may be a problem. Consider, for example, the circumstance wherein an original call has been routed to telephone **1162**. The origination of the call and caller ID are not available in the system of FIG. **7** (with a non-functioning link **1119**) until the call is connected to telephone **1162**. At that point the necessary information is transferred to T-Server **1114** at processor **1151**, and data specific to the caller may be retrieved and displayed at PC **1161**.

Consider now the further circumstance that after the agent answers and the data retrieval begins, the original caller hangs up or is otherwise disconnected, and a second call **1122**, a random call, entering the system not through SCP **1102** but directly into switch **1120**, goes to telephone **1162**. This circumstance could occur in a number of different ways, including a misdialed or misrouted call. There are also other sequences of events that could result in the same mismatch between call and data. Unless some action is taken, the data will be retrieved and displayed, although there will no correspondence between the data and the caller.

In this circumstance the origination information, which may be such as caller ID information or DNIS information, for the second (random) call will not indicate the call originates at SCP **1102**. In an embodiment of the present invention, origination data transmitted to T-Server **1114** at processor **1151** indicating the call last received was not through a valid SCP will cause any data being prepared for display at the agent station to be halted. In some embodiments, depending on the capability of switch **1120**, T-Server **1114** on processor **1151** may cause such non-SCP calls to be disconnected and/or rerouted, by command over link **1119**.

Voice Extensions Through Integrated Agent Workstations

The direct connection of a telephone to a PC connected on a LAN to a processor with an operating T-Server provides a platform for a number of voice extensions useful in the overall process of customer service through call-in centers. Several such voice extensions in embodiments of the present invention are described herein below.

Call recording is a major need in customer service operations of the sort described herein, especially in operations dealing with financial markets and utilities. Such recording operations in current art are typically quite expensive to implement and difficult to manage. In an embodiment of the present invention an improved call recording facility is provided by virtue of the connection of the telephone to the PC by data link, and the functionality afforded through LAN **1152** and code as a part of T-Server **1114**. In this embodiment a digital voice rendition of both parties to a call is transmitted on link **163** (for example) to PC **1161**.

In one embodiment of the present invention all calls are recorded, subject of course to local laws governing such matters, and provision is made for selective archiving of recorded conversations. The recording is all digital, and may be accomplished in a number of ways, utilizing a number of commercially available hardware and software entities, such as those marketed under the name SoundBlaster™. The LAN connection and availability of data servers such as server **1153** provide for the rather large amount of digital data needed for such a recording operation. In this embodiment organization of the recorded database can be done in a variety of ways, categorized by agent, by subject, by product, and so on, and relational cross-referencing may be done as well, providing a well of information not before available in such call-in centers. In addition interactive search and retrieve functionality, and interactive report generation is provided. In another embodiment of the invention digital voice recording is provided on demand, under control of the resident agent and/or the agent's supervisor. It will be apparent to those with skill in the art that there are many different schemes that may be employed for digital voice recording, using the uniquely connected and managed apparatus of the present invention.

In other embodiments of the present invention voice playback is provided, with pre-recorded massages played to a caller under agent or Host control. Such pre-recorded messages may be recorded by an agent or other person, and stored either locally in the PC or more remotely, such as on a server connected to LAN **152**. Such messages can include greetings, mandatory messages required under law in some cases, disclaimers, and all kinds of messages that may be very repetitive for an agent.

In other embodiments of the present invention voice recognition routines are used allowing an agent to invoke displays with spoken initiators on the telephone, recognized in the PC and acted upon either in the PC or through the PC by means of LAN **1152** by other servers on the LAN or by

T-Server **1114**. Voice recognition may also be used to detect upselling opportunities in the course of calls at PC connected telephones. Other voice recognition routines are used in embodiments of the invention to detect abusive or threatening speech, and to automatically save calls or portions of calls that match patterns for such speech.

Methods in Computer Simulation of Telephony Systems (3226)

The present invention in embodiments described below pertains to computer simulation of telephony call centers and activity and functionality of such centers, and to computer telephony integration (CTI) as applied to such centers. It is well-known in the art that call center architecture and functionality is a rich and varied subject, and it is beyond the scope of the present specification to describe all of the rich variation in call center technology. There are, however, commonalties. Every call center, for example, is centered on a telephony switch, either at a customer's premises or provided by a telephone company. The telephony switch involved in a call center typically has one or more incoming trunks of telephone channels for receiving telephone calls, and typically one or more outgoing trunks as well, for placing calls back into the network.

Also common to call centers is the fact of connections to telephones at agent stations, which are typically assigned directory numbers. There may be just a few, dozens or even thousands of agent stations controlled by a single call center. In some call centers, only telephones are provided at agent stations. In others there may be computer terminals with display monitors, and the computer terminals may be interconnected on a local area network (LAN) along with network servers of various sorts. Call centers have recently been developed for providing video conferencing with agents. It may be seen that the architecture can be quite varied.

Telephone switches at call centers, depending on the model and manufacture, are capable of certain functions in switching, such as Automatic Call Distribution (ACD), queuing, playing recorded announcements to callers, and much more, and typically the functions available, and the manner in which the functions operate is specific to the make and model of the telephony switch.

In addition to all of the above, the systems of interest for the present invention are systems having a CTI link capability, enabling connection of a processor executing one or more usually customer-specific applications. According to the reference incorporated above, CTI involves three areas: (1) Call Control, which includes an ability to control and observe telephony calls, switching features and status, automatic call distribution (ACD) systems and ACD agents, and to use switching resources including tone generators and detectors; (2) Telephone Control, which is an ability to control and observe telephone devices; and (3) Media Access, which includes binding telephone calls to other media services.

In accomplishing the observation and control functions of CTI as listed above, applications executed on a CTI processor can be quite varied in function, really limited only to the imagination of application developers, and presently include such functions as agent-level routing, which will be familiar to those with skill in the art.

FIG. **8** is a block diagram depicting a simulated system according to a preferred embodiment of the present invention. In FIG. **8**, boundary **2100** encloses software modules that emulate a call center and associated objects; boundary **2110** represents a unique CTI Link Interface Library (CLIL); and boundary **2120** represents a CTI application. Each of the three broad elements introduced here is described in further detail below.

In simulating a call center and associated elements as represented in FIG. **8** by group **2100**, it is necessary to simulate both physical and logical elements. These include, but are not necessarily limited to (a) agents telephones and stations, (b) ACD, (c) ACD groups, (d) ACD queues, (c) incoming trunks, (f) outgoing trunks, (g) abstractions of communication relationship between one or more devices, and (h) communication with user applications.

In the example of FIG. **8**, call center group **2100** comprises a software module **2101**, termed a Simulated Incoming Call Module (SICM), which emulates incoming calls via one or more trunks **2104** to a switch **2102**. The SICM operates with an ACD list, and simulates calls to ACD groups.

Switch **2102** is termed in embodiments of the invention a Simulated Telephony Objects Module (STOM), and comprises a variety of micro-emulated objects represented here by elements **2130-2132**, which represent such as agents, ACD queues, and the like, as listed above.

Agent's telephones and agent stations as micro-emulated objects in a call center simulation will have attributes and statuses including, but not necessarily limited to two-line connections; perhaps a group relationship; and an equipment configuration mode (status when call offered, and status when call released).

Other entities that may become micro-emulated objects in a call center module, as represented by elements **2130-2132** include such as an Interactive Voice Response (IVR) system, remote access agents, media services that may appear in a call center switch, and generally, any feature that a call center switch can perform. Outgoing trunks have parameters including but not limited to a list of the outgoing trunks and a probability of answer result, such as answer, not answer, busy, answering machine, fax/modem, SIT tones, and so forth.

Calls in the simulation procedure have attributes and parameters including but not limited to origination party; destination party; PBX call identifier, DNIS number, ANI, and call status, such as connecting, waiting, alerting, or conferencing.

Elements **2130-2132**, represented here as icons, may be, as indicated above, any function or behavior associated with STOM **2102**, and it will be apparent to those with skill in the art that the three elements shown are not enough to depict all physical and logical elements that would have to be provided for STOM **2102** to make a realistic simulation. The elements shown, however, will be sufficient to teach to practice of the invention to those with skill in the art.

Software module **2103** represents an outgoing and return module, termed a Simulated Outgoing Dialing Module (SODM), wherein calls placed by STOM **2102** over path **2106** are modeled, and calls returned as a function of the outgoing calls over path **2105** are also modeled. STOM **2102** communicates with Interface Library **2110** via paths **2108** and **2109**. Link **2113** represents a CTI link from application **2120** to switch **2102** via CLIL **2110**.

The STOM notifies an application **2120** through CLIL **2110** of arriving calls, and data associated with arriving calls, as well changing status of telephony objects and statuses. STOM **2102** receives requests from application **2120** via CLIL **2110** to change status of agents phones and stations, such as login, logout, ready, not ready, or and busy. Requests are also received to change call status, such as answer, reconnect, disconnect, produce new call, transfer call, and include a call to a conference. If requested changes are available the STOM produces the changes and sends notification o the

changes to application **2120** through CLIL **2110**. If requested changes are out available, negative notification is sent.

In the embodiment of the invention illustrated by FIG. **8**, although several computer functions are represented that may in a real system, rather than an emulated system, be executed on separate but connected and intercommunicating processors, all of the system represented by FIG. **8** will be typically executed on a single, relatively powerful computer. The various elements represented are software modules written to intercommunicate, and to simulate the behavior of real telephony systems.

FIG. **8** is more than a block diagram representing a system of the invention. FIG. **8** also represents a user interface wherein the elements are objects represented on a graphical user interface (GUI) as icons. The system of the invention is adapted such that object elements may be selected from a library and interchanged into an interconnected system.

As an example of the object-oriented nature of the GUI of FIG. **8**, attention is directed to SICM **2101**. This software module is a micro-application that, when initiated and operating may simulate calls to STOM **2102**. A master SICM is developed that includes all of the characteristics of incoming calls. The master module has input parameters that allow a user to configure the module for certain behavior of interest. As an example, it may be of interest to test an application running as element **2120** against a rush of Christmas shoppers placing calls within a certain time frame at a certain rate, with the calls statistically distributed for a range of products for which agents at the emulated call center are adapted to enter orders and schedule deliveries.

The matter of importance in describing this invention is not the particular nature or statistical distribution of the calls, but the fact that the module has alterable parameters, also known as properties, which a user may manipulate to represent behavior of interest, and that the module is adapted to the system as an object, which may be removed and replaced by another object having a different parameter set. One may then quickly and conveniently alter the incoming conditions for a simulation, and new modules with different parameter sets may be developed off line and switched into the system.

Attention is now directed to STOM **2102**. Iconic elements **2130-2132** are shown as three different shapes in FIG. **1**. Each of these elements is a micro emulated object having alterable parameters. Description of an agent object should be adequate to illustrate the nature of the invention in this aspect.

Consider that element **2130** is a micro emulated agent module. This module may be selected from a library in the fashion described above for the SICM module, and dragged and dropped into switch **2132**. Either before or after addition to the switch, parameters for the module may be accessed and set. It will be apparent to those with skill in the art that there may be a large number of agents assigned to a single call center, and that all of the agents may not have the same assignments or characteristics.

As an example of the versatility of the unique system, there may be, for example, agents for English speakers who call, and agents who speak Spanish for handling calls from Spanish-speaking customers. Certain agents may be trained for certain functions: to sell certain products, for example, or to provide technical assistance in certain situations. There may be, however, multiple instances of a micro-emulated agent. For example, of a Spanish-speaking agent assigned to first shift duty and trained to sell three specific related products. An icon represented agent, then, will have a multiplicity parameter. In setting up a simulation a user may select an agent, set certain parameters, then set the multiplicity parameter so that the call center will behave as though there were, say, twenty such agents.

It will be apparent to those with skill in the art that there are several ways parameters may be accessed and set for a micro-emulated object, such as element **2130**, which may, for example, represent an agent having particular attributes. In one embodiment, for example, a selected icon representing a micro-emulated object may be caused to display an associated window in the GUI, and the window will have programming fields wherein a user may access and alter (edit) parameters. If the object is an agent, there may be, for example, a parameter field for language, for product knowledge, for shift assignment, and so forth; and, as indicated above, there may also be a parameter for multiplicity. If a simulated agent having a complete set of behavior parameters is to be represented multiple times in a call center simulation, the multiplicity parameter may be set for "n" instances, then the object will behave in operation of the simulation as "n" objects. The behavior of such objects can be in preferred embodiments, randomized, so the behavior, where there is a range, is not always the statistical average.

For example, even though there may be multiple instances of an agent with a certain characterization, it will never be true that every such agent will behave in exactly the same way. Some of the agents may habitually come late or leave early, and others may take longer than others for processing after calls are released. In an aspect of the invention such variations are accounted for by access to a statistical database and random generator. Typically the statistical average behavior of all such agents will be known, and may be stored in a manner to be accessible to the system. Multiple agents, otherwise identical in behavior, are caused to randomly alter their behavior in a way that the statistical average behavior is met.

It will be apparent to those with skill in the art that the above description of agent functionality and variation, and the method of applying parameters, multiplicity, and statistical behavior is not necessarily limiting in the invention. Many variations are possible, even including programming an individual module for each an every agent in a setup of interest.

Attention is now directed to CLIL **2110** and communication between STOM **2102** and CLIL **2110**. CLIL is an interface library whose function it is to translate between STOM **2102** and application **2120** in a particular manner. STOM **2102** is configured in a manner that will be common to any of the several makes and models of available telephony switches currently available. Different makes and models of telephony switches communicate with CTI applications in different ways, however, and provide significantly different behavior specific to a particular make and model of switch. Communication may also be characterized by latency considerations. For example, in some real world situations one might wish to test, the telephony switch will be on the customer's premises, and in others, the telephony switch might be in the network, remote from the customer's premises. Latency issues in communication will differ by the different switch location, even with the same physical switch.

CLIL is a switch-dependent layer that controls communication of commands and status over data paths **2108/2109** and CTI link **2113**. The function of CLIL **2110** is to add switch dependent characteristics to the communication, so one simulated generic call center can be made to appear to a CTI application as a particular make and model of a switch connected in a specific manner. The particular value of CLIL **2110** is that an application may be tested against one make and model of a switch, and, by selecting a different layer of software from CLIL **22110**, one may then test the same CTI

application against a different make and model of switch and/or location and connectivity of a switch user may quickly and conveniently substitute one CLIL setup for another for communication with a switch of interest.

Internet Protocol Network Telephony (IPNT)

In all of the embodiments and aspects of the invention described above specific examples have been drawn from the technological area of conventional intelligent telephony networks, other than what is now known as Internet protocol network telephony, wherein computers simulate telephones through software, microphones, and speakers, and telephony data between such equipped computers is transmitted over Internet connections and directed by servers, such as destination number servers (DNS) in the Internet. In the IPNT world IP addresses are used instead of telephone numbers, and there are differences in the way data packets are formulated and transmitted. Moreover, what may be termed routing is done by such as IP switches and hubs, wherein destination addresses may be changed. These differences, however, are not limiting in embodiments of the present invention.

FIG. **7** shows such an embodiment wherein Internet calls originating in Internet network **1200** from computer **1210** are received by the DNS in the Internet and forwarded to switch **1120**, which in this embodiment also functions as an IP switch. From this point the Internet call is treated like a telephony call wherein the call may also have caller ID attached (originating caller's Internet address), and in those cases, wherein a separate network digital data link is accomplished between processors at the origination end (**1114**) and the customer's premises (**1151**) a data packet associated with the call may be forwarded over link **1118**. Also, T-S **1116**, which interacts continuously with switch **1120** in this embodiment, is capable of transacting with data file server **1153**, given caller ID and/or other data associated with a call, to retrieve further information about the caller from data file server **1153**.

In many embodiments of the invention described, the inventions are involved with new and unique ways to use machine intelligence for telephony functions, particularly, but not exclusively, as these functions relate to call centers and intelligent routing of calls. In instances of the invention described, the principles of the invention may also be applied to IPNT without undue experimentation.

As examples of IPNT application, in those embodiments dealing with personal routing and personal routers, the methods and apparatus described may also be adapted to IPNT so personal routing rules, negotiation, and the like may be provided for IPNT calls as well. In the aspects of the invention dealing with simulation of CTI applications and testing, the applications may apply to IPNT telephony as well as to more conventional telephony systems. Other examples will be apparent to those with skill in the telephony arts.

It will be apparent to those with skill in the art that there are many alterations that may be made in the embodiments of the invention herein described without departing from the spirit and scope of the invention. Some of these have been described above, such as the use of a telephony server like T-Server **1207** running on processor **1223**. In some cases such a server is not needed to practice the invention, as was described above.

Many of the functional units of the system in embodiments of the invention may be implemented as code routines in computerized telephony equipment, computer servers, and individual workstations. It is well-known that programmers are highly individualistic, and may implement similar functionality by considerably different routines. Also, the invention may be applied to widely varying hardware systems. Further, hardware used to practice the invention may vary in many ways. There are similarly many other alterations in the embodiments described herein which will fall within the spirit and scope of the present invention in it's several aspects described. The invention is limited only by the breadth of the claims below.

What is claimed is:

1. A call center, comprising:

a plurality of agent stations having a telephone connected to computerized equipment enabling a user agent to interact with Internet Protocol (IP) calls over the telephone;

a local area network (LAN) connecting at least some of the agent stations;

a server having an Internet connection adapted to receive IP calls from the Internet;

an IP switch connected to the LAN having access to a data repository;

wherein the server attaches data initially received with an IP call and forwards the IP call to the IP switch which uses the attached data to retrieve further data associated with the IP call or caller from the data repository, and to provide the further data to an agent to which the call is routed.

2. The call center of claim **1** wherein the IP switch is adapted to service IP calls from specific servers in the Internet and to block display of data at agent stations for any call not identified as originating at one of the specific servers.

3. The call center of claim **1** wherein the computerized equipment comprises personal computers (PCs).

4. A call-routing system, comprising:

a server connected to the Internet, the server adapted to receive IP telephone calls originating from the Internet and attach data initially received with the IP call;

an IP switch for queuing the calls for agents at agent stations in a communication center; and

a call router executing in the IP switch, the call router adapted to route the IP calls to the agent stations;

wherein the IP switch uses data initially received with an IP call to retrieve further data associated with a caller from the data repository, and to provide the further data to an agent to which the call is routed.

5. The system of claim **4** wherein the IP switch is adapted to service calls from specific servers in the IP network and to block display of data at agent stations for any call not identified as originating at one of the specific servers.

6. The call-routing system of claim **4** wherein one or more of the agent stations comprise personal computers (PCs).

* * * * *