OPIC
Office de la propriété intellectuelle du Canada

CIPO
Canadian Intellectual Property Office

(12) (19) (CA) **Demande-Application**

(21) (A1) **2,252,143**
(22) 1998/10/27
(43) 1999/06/02

(72) OXLEY, Jeffery Allen, US
(72) DANKO, Thomas, US
(71) VISKASE CORPORATION, US

(51) Int.Cl.[6] H01M 2/16, H01M 2/14
(30) 1997/12/02 (08/982,926) US

(54) **SEPARATEUR (D'ACCUMULATEURS) A ONDULATION REDUITE ET METHODE CONNEXE**

(54) **REDUCED CURL BATTERY SEPARATOR AND METHOD**

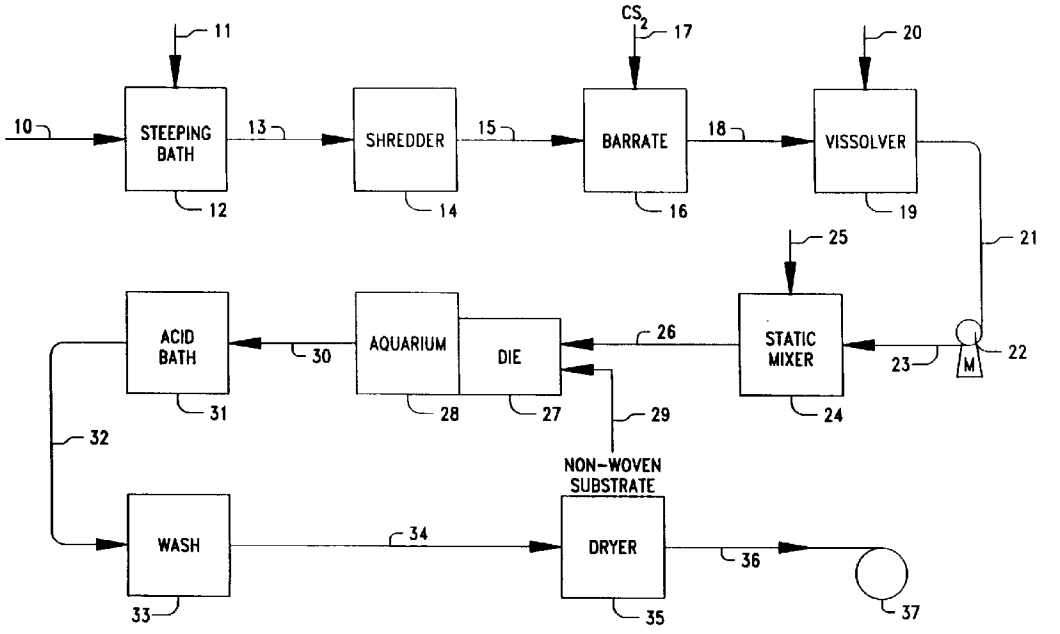

(57) A curl resistant battery separator of a noncellulosic nonwoven substrate extrusion coated on at least one surface with a cellulose film and process for making such separator by contacting a nonwoven noncellulosic textile substrate with a cellulose or cellulose derivative solution on at least one side of said substrate; converting the solution to a solid cellulose or cellulose derivative, preferably having a degree of polymerization of at least 350, more preferably at least 600, to form a coated substrate; washing said substrate in an aqueous solution; drying the coated substrate under biaxial tension to provide a battery separator having a moisture content of from about 4 to 25 wt. % based on the bone dry gauge of the separator(BDG); and then holding the separator for at least 8 hours at elevated temperatures of at least 40°C in the presence of a controlled amount of moisture to produce a separator which is stabilized against curling and has a moisture content between about 4 to 25 wt. % BDG and, preferably having a absorption rate of at least 6 mm/5 min. and a 30% KOH absorption of at least 200 g/m^2.

ABSTRACT OF THE DISCLOSURE

A curl resistant battery separator of a noncellulosic nonwoven substrate extrusion coated on at least one surface with a cellulose film and process for making such separator by contacting a nonwoven noncellulosic textile substrate with a cellulose or cellulose derivative solution on at least one side of said substrate; converting the solution to a solid cellulose or cellulose derivative, preferably having a degree of polymerization of at least 350, more preferably at least 600, to form a coated substrate; washing said substrate in an aqueous solution; drying the coated substrate under biaxial tension to provide a battery separator having a moisture content of from about 4 to 25 wt. % based on the bone dry gauge of the separator(BDG); and then holding the separator for at least 8 hours at elevated temperatures of at least 40 °C in the presence of a controlled amount of moisture to produce a separator which is stabilized against curling and has a moisture content between about 4 to 25 wt. % BDG and, preferably having a absorption rate of at least 6 mm/5 min. and a 30% KOH absorption of at least 200 g/m^2.

REDUCED CURL BATTERY SEPARATOR AND METHOD

BACKGROUND OF THE INVENTION

The present invention relates to battery separators and electric batteries.

The term "battery" as pertaining to electric batteries is used herein to denote one or more electric cells connected together to convert chemical energy into electrical energy. Batteries are used to power a variety of devices including radios, toys, hearing aids and portable equipment. An "electric cell" is a device for converting chemical energy into electric energy. Dry cell batteries have an electrolyte made nonspillable by use of an absorbent material. Dry cell batteries are also known as "LeClanche" cells after George LeClanche who received a French patent in 1866 for an electric cell having a zinc electrode and a MnO_2 coated carbon electrode in a nonspillable (hence the term "dry") electrolyte of ammonium chloride paste. By the 1960s other electrode systems including Ag/Zn, HgO/Zn and alkaline MnO_2/Zn cells were in use.

All batteries have at least one anode and one cathode separated by electrolyte and preferably a battery separator. "Battery separators" are physical barriers interposed between the anode and the cathode which prevent physical contact therebetween. Battery separators must be permeable to electrons and/or ions.

A variety of materials have been used as battery separators. Various dry cell and storage batteries have employed wheat flour and cornstarch paste, paper, wood veneer, hard rubber, porous rubber, celluloid, glass mats, regenerated cellulose and fiber-reinforced regenerated cellulose (sausage casings). A variety of materials have been explored for use as battery separators including polyvinyl alcohol, methyl cellulose, polypropylene, fiberglass,

and crosslinked methacrylic acid grafted polyethylene. These separators are used to separate the positive and negative electrodes of a cell to prevent short circuits. Separators should distribute and retain electrolyte between the electrodes while preventing dendritic growths or soluble products from shorting the cell or migrating to an opposing electrode. Desirably, separators will: be stable in the cell environment resisting degradation by cell media; permit conduction across the separator of current transferring ions or charges; be capable of operation under conditions of use including desired operating temperatures, pressures, and forces; and be easily and economically fabricated into electric cells.

Battery separators have been used almost from the beginning of electric cell and battery development. Felted cloth, strips of rubber, thin wood, plastic, impregnated paper, microporous poly(vinylchloride), and woven fabrics of cotton or nylon have been used. Sealed cell batteries often use separators which would absorb all available electrolyte. Generally these absorbent separators are nonwoven. The earliest absorbent separators were cellulosic and later, resin bonded paper and polyamide based nonwovens were also used. Sterilizable nonwoven fabrics of polypropylene have also been used. Ag/Zn batteries have used cellulose fiber reinforced casing type separator since the 1960s.

Regenerated cellulose film (cellophane) has also been used as a battery separator, e.g. for Ag/Zn batteries. Disadvantageously, it suffers from a low electrolyte absorption rate. Noncellulosic nonwovens have also been laminated to cellulose films using adhesives to produce separators having high electrolyte absorbance and a fast absorption rate. Nonwoven polyamides, poly(vinylalcohol) (PVOH), acrylonitrile-vinyl chloride copolymer, polyesters, and polypropylenes have all been used as battery separators. Blends of PVOH with cellulose fibers have also been used as described in the article "Manufacture and Use of Nonwoven

Separators", Batteries International, pp. 44, 45 and 48, October, 1995, which article is hereby incorporated by reference in its entirety. Disadvantageously, laminate adhesives may interfere with electrolyte permeability across the separator and transfer of electrons and/or ions may be hindered causing increased resistance and lower voltage. Also, laminates using adhesives including laminates held together with low amounts of adhesive or adhesives chosen to minimize resistance and transfer hindrance are subject to delamination which leads to shorting and early battery failure.

SUMMARY OF THE INVENTION

Battery separators of a nonwoven substrate of noncellulosic fibers extrusion coated on at least one surface with a cellulosic film are disclosed (See also U.S. application Serial No. 08/ 585,555; filed January 12, 1996 which is hereby incorporated in its entirety by reference). Such separators are stabilized to prevent undesirable curling during assembly of the separator with cathode, anode and electrolyte in battery manufacture. The inventive separators are made by a novel process. This inventive process comprises contacting a nonwoven substrate comprising noncellulosic fibers, with a liquid cellulose or cellulose derivative solution on at least one side of the substrate (preferably while forming into a tube); converting the solution to a solid cellulose or cellulose derivative film (preferably having a degree of polymerization of at least 350, more preferably at least 600), to form a coated substrate; washing the coated substrate in an aqueous solution, preferably water; drying the coated substrate under biaxial tension to provide a battery separator; and holding the separator for at least 8 hours at an elevated temperate of at least 40°C in the presence of a controlled amount of moisture to produce a separator which is stabilized against curling and which has a moisture content of from about 4 to 25 (preferably 4-12) weight percent based upon the bone dry gauge weight of

the separator (BDG).

BRIEF DESCRIPTION OF THE DRAWING

Fig. 1 is a schematic representation of a process for making an article according to the present invention.

DETAILED DESCRIPTION OF THE INVENTION

Battery separators provide mechanical spacing between electrodes to prevent shorting. Characteristics of good battery separators include: physical strength to hold up in use and facilitate ease of battery manufacture; a high dielectric constant to prevent shorting; a minimum electrolytic resistance to provide high current flow; physical and chemical stability in the cell environment; and prevention of solids transfer from electrode to electrode which could cause shorting. Beneficially, separators may also have the following additional characteristics: good lay flat ability, curl resistance and flexibility to facilitate battery manufacture; rapid wetting and rewetting to facilitate high speed manufacture and rechargability of batteries after use; gas permeability to reduce intracell pressure build up; effective control of migration of certain metal species to prevent premature battery failure; and low cost.

Prior art battery separators have a variety of disadvantages. Laminates in which noncellulosic adhesives are used for interlayer adhesion either have undesirably high resistance or are subject to delamination, shorting and early battery failure. Also degradation resistance, electrolyte absorptive capacity, absorptive rate, resistance to dendritic growths and shorting are all important parameters for battery separators used in high speed manufacturing processes. Uncoated paper separators are subject to fast degradation by alkaline electrolytes causing shorting and failure. Regenerated cellulose films (cellophane), not having fiber

reinforcement, are separators having low absorption rates making them unsuitable for high speed production of some batteries in which the separator must quickly become saturated with electrolyte prior to completion of the battery enclosure. These regenerated cellulose films are also subject to degradation by electrolyte leading to early battery failure and have undesirably low rewetting rates which deleteriously impact on rechargability of batteries, e.g. by slowing the recharge rate and process. Many separators are not sufficiently flexible or thin or uniform, for use in mass production of batteries, especially dry cell batteries.

Excessive curl may also interfere with high speed battery manufacture. Curl may be defined as the rolling of the separator back towards itself. It is a condition where a rectangular portion of a separator refuses to lay flat under its own weight on a planar surface. Curling forces may be present in more than one direction. For a wound reel of battery separator, a machine direction (longitudinal) curl may occur or curl may be present in a transverse direction (across the width of the separator). The degree of curl ranges from none to severe, with the worse type of curl being a rolled up condition similar to a New Year's Eve streamer or party blower. A severe transverse curl causes the separator to roll up in a straw shape.

Separators which are curl-free or which have good lay flat characteristics are important in automated battery manufacture because the high speed handling equipment used to insert the separator into a battery container e.g. a battery can, requires a generally flat and flexible separator. For example, a vacuum plate may be used to hold a typically rectangular separator in place while additional handling equipment prepares the separator for insertion into a battery container. If the separator has a tendency to curl and the curling force exceeds the ability of the vacuum force to position the separator against the vacuum plate, then the

separator cannot be properly inserted into the battery container resulting in production of defective batteries or a battery assembly line disruption causing downtime and/or loss of productivity.

Curl may be a particular problem for battery separators having a multiple layer structure of dissimilar materials. For example, it is possible that curl may be caused in a bilayer separator from the different materials of each layer having different levels of moisture. Also, it may be that use of a battery separator process e.g. involving reeling or creation of a tube, particularly under tensions which are optionally applied to induce orientation in one or more directions, may induce a tendency to curl. Curl may be caused by a combination of these or other factors. Regardless of the cause of curl, its presence is unacceptable when severe enough to negatively impact on battery performance, defects, or productivity of battery manufacture. It has been discovered that noncellulosic, nonwoven substrates such as polyamides when coated with a cellulose or cellulose derivative film, e.g., in a tubular manufacture process, have a tendency towards curling. This tendency appears to be dependent, in part, upon the manufacturing process of the nonwoven e.g. use of a wet lay polyamide nonwoven substrate has been found to result in less curl than a spunbonded polyamide nonwoven substrate. This curling is undesirable and causes waste in separator production because severely curled separators are unacceptable to battery manufacturers. Also, it is desirable to use less expensive nonwovens, e.g. a spunbonded nonwoven having a tendency to curl severely is less expensive than a wet lay nonwoven of the same type (such as polyamide) which curls to a lesser extent. By use of the present invention, not only is the more expensive substrate improved making its use more efficient, but the less expensive substrate may now be used having all of the desired performance at less cost.

According to the present invention a curl resistant battery separator is provided having a nonwoven substrate of noncellulosic fibers with the substrate extrusion coated on at least one surface with a cellulose film. No glue, adhesive, or noncellulosic adhesive is needed to bond the substrate to the cellulosic film. The inventive separator is not a laminate of two films held together by an adhesive. Instead, the invention coats a noncellulosic nonwoven with a liquid, plastified or extrudable cellulosic solution which is then solidified to physically unite the nonwoven and cellulosic coating. Preferably, the separator has a absorption rate of at least 6 mm/5 min. of an aqueous 30 wt. % KOH solution, and/or a 30% KOH solution absorption of at least 200 g/m^2. The inventive battery separator is degradation resistant in electrolyte, delamination resistant, resists dendritic growth and shorting while providing low electrolytic resistance, high electrolyte capacity and a fast absorptive rate. Fundamental to the present invention is the concept of providing a degradation resistant separator which is stabilized against curling while maintaining a strong substrate-coating bond without delamination and without requiring use of resistance raising adhesives. Also, preferably the extent of penetration of the cellulose or cellulose derivative into the nonwoven substrate is limited in order to enhance absorptive rate and capacity. Although increased penetration will help reduce the tendency for curling, it is desirable to be able to produce separators having the desired absorption rate and capacity without sacrificing good lay flat properties.

The present invention is particularly useful with respect to the manufacture of alkaline dry cells. The inventive battery separators are stabilized to lay flat without deleterious curling. They may also have fast absorptive rates and a high level of electrolyte absorptive capacity while being resistant to delamination.

Typical alkaline dry cell batteries use electrolytes comprising 20-50 weight %

potassium hydroxide (KOH) in aqueous solution. It is believed that absorptive properties of electrolytes such as aqueous KOH are linear with respect to basic strength of electrolytic solutions. In the present invention electrolyte absorptive properties are reported with respect to a 30 weight % aqueous solution of KOH. However these are just tests to determine the absorptive property improvements. Separators having the presently claimed absorptive property values should exhibit similarly improved values when used with electrolytes having various strengths and compositions, and the claimed separators are not limited to use with electrolyte solutions of 30% KOH only.

The cellulosic film component of the battery separator may be made by a variety of procedures. For example, cellulose with or without chemical modifications, may be put into solution with a solvent, e.g. by dispersion or by dissolution, and then coated onto a cellulosic nonwoven followed by solvent removal (with or without chemical modification of the cellulose) to solidify the formed cellulosic article. Examples of known processes for production of cellulosic articles are the viscose, cuprammonium, N-methyl-morpholine-n-oxide, zinc chloride, cellulose acetate (with or without subsequent deacetylation), and cellulose carbamate processes as described in U.S. Patents e.g. Nos. 1,601,686; 2,651,582; 4,145,532; 4,426,228; 4,781,931; 4,789,006; 4,867,204; 4,999,149; 5,277,857; 5,451,364; 5,658,525; and 5,658,525; the teachings of which are all hereby incorporated by reference. Suitable cellulosic coatings include cellulose, regenerated cellulose, derivatized cellulose, deacetylated cellulose acetate, and cellulose or a cellulose derivative having a degree of polymerization of from 350 to 800 units. In one preferred embodiment the degree of polymerization is at least 600 units. The formed battery separator may be a flat sheet or tube. It is contemplated that the present invention may utilize any known method of producing a

cellulosic film. The cellulose coating can have additives for processing, or for improved properties including e.g. surfactants, and olefinic oxide polymers such as poly(ethylene oxide). Poly(ethylene oxide) may be added to a solution of cellulose or a cellulose derivative such as viscose in amounts up to about 20 % by weight based on the weight of the cellulose, preferably from 1 to 10 % by weight. Such poly(ethylene oxide) is believed to provide or facilitate plasticization without requiring addition of glycerin which is deleterious to battery separator performance.

The invention also uses a nonwoven substrate. The term "nonwoven" as used herein refers to nonwoven papers, fabrics, or textiles and includes spunbonded webs, dry lay webs, and wet lay webs.

Nonwovens are made from natural or synthetic fibers bound together in a web. Suitable natural fibers include cellulosic fibers such as cotton, hemp, jute, and wood pulp. Suitable synthetic fibers include: noncellulosic fibers including thermoplastic polymers (including homopolymers and copolymers). Suitable noncellulosic fibers include such polymers as polyamide, polyester, polyolefins including polypropylene, poly(vinyl alcohol), acrylonitrile-vinyl chloride copolymers. Other suitable synthetic fibers include cellulosic fibers such as regenerated cellulose, rayon, lyocell, cellulose acetate, cellulose carbamate, and deacetylated cellulose acetate. These fibers, either alone or in blends, are formed into a nonwoven web comprising noncellulosic fibers either alone or in combination with cellulosic fibers using binding means. Such binding means may be thermal, chemical and/or mechanical including e.g., hydrogen bonds, viscose, regenerated cellulose, other cellulose or cellulose derivative solutions which are then solidified, resins, sizing agents which also have bonding characteristics, alkyl ketene dimers, cellulosic esters, urethanes, polyolefins, cellulose acetate,

poly (vinyl chloride), poly(vinyl acetate), poly(vinyl alcohol), acrylic resins, liquid based bonding agents, fusion bonds and mechanical bonding with fibers embedded in a solid matrix. Webs may be bonded in any suitable manner including saturation bonded, spray bonded, print bonded, and/or spunbonded. Thermal and/or solvent bonding of fibers may also be done. Polyester, polyamide and polyolefin fibers are typically spunbonded. Suitable nonwovens have been made by Cerex, DuPont, Freudenberg, Hollingsworth & Vose, Lurgi, Monsanto, and Rhone. Suitable nonwovens are further described in the above noted article "Manufacture and Use of Nonwoven Separator", which article is hereby incorporated by reference in its entirety. Preferred nonwovens are polyamides such as nylon 6; nylon 66; nylon 11; nylon 12; nylon 6,12; nylon 6/12 copolymer; and nylon 6/66 copolymer or blends thereof. These nonwoven nylons are typically spunbonded, dry lay or wet lay.

Fundamental to the present invention is use of a nonwoven substrate comprising noncellulosic fibers in which the substrate is coated (preferably extrusion coated) with a cellulosic film and stabilized against curling. Regarding the substrate, these noncellulosic fibers are preferably thermoplastic fibers having no anhydroglucose units, such as polyamides, polyesters, polyolefins or poly(vinyl alcohol)s. However, the nonwovens in accordance with the present invention may be made by blending such noncellulosic fibers with cellulosic fibers as noted above. Blends of cellulosic fibers and noncellulosic fibers produce suitable nonwoven substrates for use in the present invention. Both natural and synthetic cellulosic fibers or blends thereof may be added to the noncellulosic fibers. Preferably, the noncellulosic fibers will comprise at least 50% by weight, more preferably at least 60% still more preferably at least 75% of the nonwoven substrate. In some preferred embodiments, the nonwoven substrate comprises at least 95 weight % of noncellulosic fibers.

In an especially preferred embodiment, a nonwoven substrate having at least 95 weight % polyamide fibers are used. Preferred nonwoven materials comprise at least 95% fibrous material and 5% or less (0-5%) of additives including e.g. binding agents, hydrophilic character modifying agents, antistatic agents, electrolyte conductivity modifiers, electrolyte absorbance modifiers, or sizing agents including those as noted above.

Advantageously, the present invention will coat a noncellulosic nonwoven with a cellulosic film to produce a battery separator having at least about 20% by weight of cellulose or a cellulose derivative based on the bone dry gauge (BDG) weight of the nonwoven and cellulosic coating. The term "bone dry gauge" as used herein refers to the total weight of cellulose such as regenerated cellulose and/or cellulosic or noncellulosic nonwovens such as paper or polyamide including any additives, which have been dried by heating in a convection oven at 160°C for one hour to remove water moisture. Suitable cellulosic add-on levels are between about 20 to 500% BDG(based on the weight of the nonwoven separator). Preferably the coating add-on will be at least 60% BDG, and more preferably between about 100 - 300% based upon the bone dry gauge weight of the nonwoven substrate.

With further respect to the present invention, the separator will generally have a thickness of 20 mils (508 microns) or less. Both planar, sheet, cylindrical and tubular articles are contemplated and tubular articles are typically slit and reeled to form wound sheets. A tubular manufacturing process is preferred in order to facilitate and achieve bidirectional orientation to improve strength, dimensional stability and/or uniformity.

A starting material in the manufacture of the present invention is high quality, relatively pure cellulose pulp (either cotton or wood), most typically in sheet form. Preferably, the cellulosic coating used in the invention is derived from a cellulose material

having at least 90 weight % α-cellulose, more preferably at least 95 weight %, and most preferably at least 98 weight % α-cellulose. The higher the purity the stronger the separator and the less probability of battery failure due to the presence of impurities. In the manufacture of fibrous battery separators of the present invention, regenerated cellulose is generally made using the well known viscose process whereby a viscose solution is typically extruded through an annular die and is coated on one or more sides of a tube which is generally formed by folding a web of paper so that the opposing side edges overlap. The viscose impregnates the paper tube where the viscose solution is subsequently coagulated and regenerated by passing into a coagulating and regenerating bath to produce a tube of regenerated cellulose. Thus the substrate is in the shape of a tube as the solution is solidified. This tube is subsequently washed, and dried e.g. by inflation under substantial air pressure (which may also impart transverse direction orientation). A suitable viscose process is described below which utilizes cellulosic sheet starting materials having a suitable density between about 0.8-0.9 gm/cc.

This relatively pure cellulose is converted to alkali cellulose by steeping in a sodium hydroxide solution. Cellulose absorbs the sodium hydroxide and the fibers swell and open. The degree of steeping is preferably held to the minimum amount necessary to ensure uniform distribution of the sodium hydroxide on the cellulose. A steeping bath temperature of about 19°-30°C is preferred, and a suitable sodium hydroxide concentration in the steeping bath is about 17-20 wt.%.

In a typical steeping apparatus there is no forced circulation of caustic between the cellulose sheets, so it is important that the rate of filling the apparatus with caustic (fill rate) be such that the caustic reaches every portion of the sheets. The cellulose sheets are typically

held in place in the steeping chamber by a support frame, and a typical steep time in commercial practice is 50-60 minutes.

After steeping, the caustic is drained and excess absorbed sodium hydroxide solution is pressed out, typically by a hydraulic ram. A typical alkali cellulose composition is about 13-18% caustic, 30-35% cellulose and the remainder water (by wt.). The percent caustic and cellulose in the alkali cellulose is controlled by the well-known press weight ratio. This ratio is the weight of the wet cake after pressing divided by the weight of the original cellulose used. A typical press ratio is about 2.6-3.2. After the press out, the alkali cellulose is shredded, i.e. the fibers in the sheet are pulled apart so that during xanthation the carbon disulphide contacts all portions of the alkali cellulose. There is an optimum shredding time for each system which can only be determined by testing. Typical shredding time is about 40-90 minutes. Heat is generated during the shredding step and the temperature may, for example, be controlled by means of a cooling water jacket around the shredder, preferably in the range of 25-35°C.

During a succeeding, preferred aging step, an oxidative process is initiated which breaks the cellulose molecular chains thereby reducing the average degree of polymerization which will in turn reduce the viscosity of the viscose to be produced. During the aging step the shredded alkali cellulose is preferably maintained in covered vessels to prevent drying.

The conversion of alkali cellulose to cellulose xanthate is accomplished by placing the shredded and aged alkali cellulose in a closed reactor known as a baratte and adding carbon disulphide which vaporizes and reacts with the alkali cellulose to form cellulose xanthate. The amount of carbon disulphide used to achieve the desired conversion to cellulose xanthate is typically equal in weight to about 26-38% of the bone dry weight cellulose in the alkali

cellulose, and preferably only enough to produce cellulose xanthate with acceptable filtration characteristics.

The length of time required for the xanthation reaction (conversion of alkali cellulose to cellulose xanthate) depends on the reaction temperature and the quantity of the carbon disulphide. Variations in such parameters as the quantity of carbon disulphide used as well as the temperature, and pressure during xanthation is determined by the desired degree of xanthation. The percent total sulphur is directly related to the amount of carbon disulphide introduced, including xanthate and by-product sulphur. In general, xanthation reaction conditions are varied to ensure that adequate conversion is achieved by reaching a total sulphur content greater than about 1.1 wt.%. Typically, there is about 0.4-1.5% by wt. sulphur in the by-products admixed with cellulose xanthate.

The purpose of converting alkali cellulose to cellulose xanthate is to enable dissolution of the cellulose in a dilute solution of sodium hydroxide, e.g. 3.6-5.0 wt.%. This is the so-called viscose formation or "vissolving" step, in which sodium hydroxide is absorbed onto the cellulose xanthate molecule which becomes highly swollen and dissolves over a finite time period. This step is preferably accelerated by cooling and agitation. Sufficient cooling is preferably provided to maintain the mixture at about 10°C or less. The quality of the solution is typically determined by measuring the filterability of the viscose e.g. by rate of clogging or throughput through a filter such as a cloth filter. The viscose is allowed to ripen, deaerate, and is filtered under controlled temperature and vacuum. During ripening, reactions occur which result in a more uniform distribution of the xanthate group on the cellulose and a gradual decomposition of the xanthate molecule which progressively reduces its ability to remain dissolved, and increases the ease of viscose-cellulose regeneration.

Viscose is essentially a solution of cellulose xanthate in an aqueous solution of sodium hydroxide. Viscose is aged (by controlling time and temperature) to promote a more uniformed distribution of xanthate groups across the cellulose chains. This aging (also termed "ripening") is controlled to facilitate gelation or coagulation. If the desired product is a tube, the tubular form is obtained by forcing the viscose through a restricted opening, for example, an annular gap. The diameter and gap width of the opening, as well as the rate at which the viscose is pumped through, are designed in a manner well known to those skilled in the art for coating fiber-reinforced cellulosic nonwovens such that a planar or tubular cellulose coated nonwoven of specific wall thickness and diameter is formed from the viscose. Such process may be easily adapted for use to coat noncellulosic nonwoven webs in accordance with the present invention without undue experimentation.

The extruded viscose coated nonwoven substrate (having noncellulosic fibers preferably in amounts of at least 50 weight % of the nonwoven) is converted (coagulated and regenerated) to cellulose in the extrusion bath by action of a mixture of acid and salt, for example, sulphuric acid, sodium sulphate and ammonium sulphate. A typical bath contains about 2-10% sulfuric acid by weight, and the bath temperature may be about 30-56°C.

The cellulose coated, noncellulosic nonwoven emerging from the acid/salt bath is preferably passed through several dilute acid baths. The purpose of these baths is to ensure completion of the regeneration. During regeneration, gases (such as H_2S and CS_2) are released through both the inner and outer surfaces of the coated nonwoven, and means must be provided for removing these gases from the separator. After the separator has been thoroughly regenerated and the salt removed, it is preferably passed through a series of heated water baths to wash out residual sulfur by-products and may also pass through a desulphuring

tub containing a dilute (<10 %) aqueous solution of chlorine bleach or caustic. The above process is similar to that for making fibrous sausage casing which has also been used commercially in the past for battery separators. Although glycerin is used in sausage casing to facilitate plasticization, it is omitted from production of battery separators. The present invention may also vary the degree of polymerization (DP) and/or process conditions to limit penetration of the cellulosic film into the nonwoven to improve absorption rates and electrolyte absorption capacity. Degree of polymerization (DP) as used herein means the number of anhydroglucose units in the cellulose chain. DP may be determined by methods known in the art such as ASTM D-1795-90. DP values of at least 350, preferably between 350-800, may be utilized in the present invention. Battery separators are beneficially free of glycerin which interferes with battery performance.

In production of tubular battery separators during the cellulose regeneration step, as described above, sulfur-containing gases and water vapor accumulate inside the regenerating tube. These waste gases must be removed, and this is may be done by slitting the battery separator walls at intervals during production so the waste gases may be vented.

The viscose is extruded onto preferably only one, or optionally both sides of a tube which is usually formed by folding a web of a nonwoven substrate sheet so that the opposing side edges overlap. In production of fibrous food casings or prior art cellulosic battery separators the viscose impregnates a paper tube where it is coagulated and regenerated to produce a fiber-reinforced tube of regenerated cellulose. In the present invention this coating is onto a noncellulosic substrate which may consist essentially of noncellulosic fibers, or optionally may comprise both noncellulosic fibers and cellulosic fibers. In one embodiment of the invention penetration is limited to enhance the absorption rate and/or total electrolyte

(e.g.KOH) absorption. The nonwoven substrate provides noncellulosic fiber reinforcement which is generally utilized to provide degradation resistance, high tensile strength, a fast absorption rate and/or high electrolyte absorption.

Separators of the present invention may be humidified to a level sufficient to allow the separators to be handled without undue cracking or breakage from brittleness. A non-glycerin humectant or plasticizer such as poly(ethylene oxide) which does not unduly interfere with battery function may be employed to regulate moisture and/or electrolyte retention and separator swelling to produce a battery separator which has sufficient flexibility, or only water may be used with water barrier packaging to ensure proper moisture levels prior to usage.

Battery separators suitable for use in the present invention may have a moisture content of less than about 100 wt. % based upon the bone dry gauge (BDG) weight of the separator.

The separator of the present invention has a moisture content ranging from about 4 wt. % BDG to about 25 wt. % BDG, preferably 4-12 wt. % BDG, with 8-12 wt. % BDG especially preferred. Higher moisture levels may inhibit or limit total KOH (or electrolyte) absorption and may also lower absorption rates.

Referring now to Fig. 1, cellulose starting material in the form of sheets of pulp 10 and an aqueous solution of sodium hydroxide 11 are brought into contact in a steeping bath 12 to convert the cellulose to alkali cellulose. As noted above, typically high quality cellulose pulp having a density between about 0.8-0.9 g/cm^3 is used with a 17-20 weight percent aqueous solution of sodium hydroxide. Cellulose is held in the steeping bath for about 50-60 minutes at a bath temperature of about 19° - 30°C. The steeping bath is drained and the

alkali cellulose pressed as described in further detail above. The pressed alkali cellulose is transferred to shredding means such as a temperature controlled mechanical shredder 14 where the alkali cellulose fibers are pulled apart. The shredded alkali cellulose is aged for a suitable time to produce the desired degree of polymerization and then transferred to a baratte 16 to which CS_2 is added to convert the alpha cellulose to cellulose xanthate. The cellulose xanthate 18 is then transferred to a vissolver 19 with addition of aqueous sodium hydroxide 20 and the temperature is controlled and mixture agitated to place the cellulose xanthate into solution thereby forming viscose. The formed viscose 21 is allowed to ripen to achieve the desired xanthation, deaerated, filtered and conveyed via pumping means such as a viscose pump 22 and transfer means such as pipe 23 to optional mixing means such as a static mixer 24. An olefinic oxide polymer 25 such as poly(ethylene oxide) may optionally be added as a metered solution to the static mixer 24 which contains a series of baffles to facilitate mixing of the olefinic oxide polymer 25 and viscose 21. The viscose 21 and optional poly(ethylene oxide) 25 are preferably uniformly mixed to produce a homogeneous solution which is transferred by transfer means 26 such as a pipe to an extrusion die or nozzle 27 which immediately opens into coagulation and regeneration means such as a tank hereinafter referred to as an aquarium 28 containing an acid such as sulfuric acid which initiates and causes coagulation and regeneration thereby forming a shaped article. The aquarium may also contain agents to modify the rate of regeneration, such as metal salts, such as those as is well known in the art of making sausage casings.

A nonwoven substrate 29 of a noncellulose fiber web is admitted to die 27 where the viscose is extruded onto the substrate 29 before it enters the aquarium. Different dies are used for production of tubular and sheet articles and suitable dies are well known in the

extrusion art. In the production of tubular, cellulose coated, nonwoven battery separators, the nonwoven substrate is shaped into a tube prior to coating with viscose. In one embodiment of the present invention, the cellulosic coating solution e.g. viscose is allowed to only slightly penetrate the nonwoven substrate prior to admittance to the aquarium and penetration time may be adjusted by modifying the distance between the die and aquarium and/or adjusting the travel speed of the article, and most importantly by selection of the degree of polymerization of the cellulosic coating. Use of viscose with subsequent regeneration is illustrative of one embodiment of the invention, but other cellulose solutions and solubilized derivatives may also be used as noted above. Fundamental to the present invention is the concept of using a process in which cellulose or a cellulose derivative is put in contact with a nonwoven substrate comprising noncellulosic fibers and annealed to improve separator properties including stabilization against curling. Preferred separators also show degradation resistance in electrolyte over time. Battery separators also preferably have a retained wet tensile strength after 41 days, preferably 83 days, of at least 70%, preferably at least 90%. In some preferred embodiments of the invention, by increasing the speed in which the coated nonwoven is regenerated after contact between nonwoven and coating material, the amount of cellulose or cellulose derivative penetration into the nonwoven may be limited or controlled to improve the absorption rate or the electrolyte absorptive capacity. Penetration may also be controlled or limited by increasing the viscosity of the coating liquid, e.g. by lowering the temperature of the coating film or by using pressure differentials across the substrate thickness. A preferred way of limiting or controlling penetration is to modify the degree of polymerization of the coating material. A combination of one or more of the above parameters may also be adjusted to modify penetration.

It will be appreciated that various forms of dies known in the art may be used. In tubular film manufacture the die has an annular opening. For production of flat film or sheets the die may be a slot. Coextrusion dies may be employed as well as dies for coating opposing sides of the nonwoven substrate.

Optionally, the olefinic oxide polymer may be added to the cellulose, cellulosic solution or cellulose derivative at any point prior to the extrusion or shape forming step as long as the poly(ethylene oxide) becomes sufficiently mixed to produce a homogeneous mixture at extrusion. It should be clearly understood that such addition of olefinic oxide polymer may be made at various points prior to extrusion regardless of the process utilized to create an extrudable cellulose or extrudable cellulose derivative including the aforementioned cuprammonium, cellulose acetate, N-methyl-morpholine-n-oxide, zinc chloride, and cellulose carbamate processes as well as the well known viscose process which is presented here as a preferred example of the applicable processes.

Extrusion of viscose onto the nonwoven substrate 29 through die 27 into the aquarium 28 produces a partially coagulated and regenerated cellulosic-noncellulosic composite article which is conveyed by transfer means 30 to additional acid regeneration means 31 such as one or more consecutive tubs of acid. The regenerated cellulosic-nonwoven composite article, by way of example, may be a tube which is then conveyed by transfer means 32 to washing means 33 such as one or more consecutive tubs of water which may also contain additives such as caustic e.g. to adjust pH and facilitate removal of sulphur by-products or other additives to adjust or modify separator properties including hydrophilicity, dielectric constant, etc. The washed article of regenerated cellulose is conveyed by transfer means 34 to drying means 35. Drying means 35 may be humidity controlled hot air dryers where the moisture

content of the article is adjusted to provide a battery separator. These hot air dryers may inflate the separator article e.g. between transfer means 34 and 36 (which may be paired nip rollers). This inflation may be controlled to impart a transverse direction force, stretch, or orientation. Preferably, a transverse orientation is applied to at least maintain the diameter of the originally formed tube against shrinkage.

Referring again to the drawing, the dried, moisture adjusted separator is conveyed via transfer means 36 to collection means 37 such as a take-up reel or slitting operation to produce rolls of flat sheet. Typical transfer means 30, 32, 34, and 36 may each comprise one or more rollers. These rollers may be selected and operated at different speeds to impart a machine direction force, stretch or orientation. Typically the end of the roll of the separator on the reel 37 is taped to the roll to prevent unwinding and the reeled roll of separator is placed in a plastic bag(not depicted) which acts as a water barrier. The bag is closed around the roll and the open end folded or otherwise closed to prevent moisture loss. The enclosed reel is then held in a "hot room" for at least 8 hours at an elevated temperature of at least 40°C, preferably at least 45°C. The moisture level is controlled by enclosure within the closed plastic bag which acts as a moisture barrier so that the total moisture level which was previously adjusted to 4 to 25 (preferably 4 to 12) weight percent based upon the bone dry gauge of the separator does not change. This holding step, which is referred to and defined here as an annealing step, stabilizes the separator's lay flat properties against curling so that subsequent to the annealing step, a portion of the separator may be unreeled, captured by a vacuum plate, severed from the reel, and remain held under force of vacuum to permit subsequent handling, e.g. insertion into a battery can. It is believed without wishing to be bound by the belief that the holding period permits a more thorough equilibration of moisture

between the cellulosic coating and the nonwoven substrate and also causes internal stresses and strains from previous process steps to be relieved or removed to an extent which reduces the tendency toward curling in either or both machine and transverse directions. During the holding step the separator may be held under a machine direction tension, preferably of from about 1 to 4 pounds per linear inch (width) for a double layer(thickness) of separator. Thus, the flatwidth of the collapsed tube is the specified width with both sides of the tube being the "double layer". The result of the holding step under the specified conditions is a battery separator which may successfully be used to assemble batteries in high speed manufacturing operations with a minimum loss of productivity due to improper or failed insertion of the separator into the battery container. Longer holding periods and/or higher temperatures may improve reduction of curl. For example, holding periods at elevated temperatures and constant total moisture content of 16, 24, 48, 120, or 168 hours or longer may be used. The ideal temperature and holding period may be determined without undue experimentation and may be dependent upon many chosen variables such as the materials chosen for the substrate, the nature of the cellulosic coating, degree of polymerization, degree of dryer stretching, etc.. A 7 day holding period has been very successful at removing severe curl and providing excellent lay flat and stabilization against curl.

The following examples including comparative examples are given to illustrate the present invention.

Experimental results of the following examples are based on tests similar to the following test methods unless noted otherwise. All percentages expressed above and below are by weight unless otherwise noted.

The following ASTM test methods may also be utilized to test properties of the

inventive separator.

Tensile Properties/Tensile Strength: ASTM D-882, method A

Gauge: ASTM D-2103

Degree of Polymerization: ASTM D-1795-90

All ASTM test methods noted herein are incorporated by reference into this disclosure in their entirety.

Basis Weight of Battery Separators

Basis weight is a measure of the amount of separator material present including any equilibrium moisture in the separator at the time of measurement. Unless otherwise noted basis weight is reported in units of grams per square meter (g/m^2). The test procedure is as follows:

1. A template measuring 1.25" X 0.75" is placed on the separator .
2. A sharp blade is used to cut around the template to make a sample measuring 1.25" X 0.75" (area = 0.9375 in^2 = 0.0006048 m^2 = 1653 m^{-2}).
3. The cut sample is weighed to an accuracy of 0.0001 grams (g).
4. The basis weight is calculated by multiplying the weight (g) in step 3 by 1653 m^{-2}.

KOH Absorption Capacity of Battery Separators

Potassium hydroxide (KOH) absorption is a measure (reported in g/m^2) of how much electrolyte a separator will hold. This measurement is referred to as Absorption Capacity, Total Absorption, or as KOH Absorption. The test procedure is as follows:

1. A template measuring 1.25" X 0.75" is placed on the separator .
2. A sharp blade is used to cut around the template to make a sample measuring 1.25" X 0.75" (area = 0.9375 in^2 = 0.0006048 m^2 = 1653 m^{-2}).

3. The cut sample is weighed to an accuracy of 0.0001 g.

4. The basis weight (in g/m^2) is calculated by multiplying the weight in step 3 by 1653 m^{-2}.

5. The cut separator sample is allowed to soak in an aqueous solution of KOH of reported strength for 10 minutes.

6. The fully soaked separator is removed from the electrolyte with tweezers and allowed to drip until excess electrolyte is gone (approximately 10-30 seconds).

7. Each flat surface of the separator is then with tweezers dragged across a glass plate until it is visually apparent that no additional excess electrolyte is being transferred to the glass plate. This removes the excess surface electrolyte from the separator.

8. The saturated separator is then weighed to the nearest 0.0001 g.

9. The electrolyte saturated weight of the separator is calculated by multiplying the weight from step 8 by 1653 m^{-2}.

10. The KOH absorption is calculated by subtracting the basis weight of the separator (from step 4) from the saturated weight of the separator (from step 9) and is reported in g/m^2.

Absorption Rate of Battery Separators

Absorption rate is a measure of how quickly electrolyte will absorb into a battery separator. The following procedure is used:

1. A template measuring 2" X 4" is placed onto a separator.

2. The 2" X 4" sample is cut with a razor blade and is marked with an arrowhead shaped notch on one of the long sides 1/4" from the bottom.

3. The separator is placed into an electrolytic solution (30 wt.%KOH) up to the mark.

4. The separator is allowed to absorb electrolyte for 5 minutes.

5. The highest wet edge is marked and the distance from the 1/4" starting point is measured in mm.

6. The absorption rate is reported as mm of climb in 5 minutes.

The above description and below examples are given to illustrate the invention and methods of making the invention, but these examples should not be take as limiting the scope of the invention to the particular embodiments or parameters demonstrated since modifications of these teachings will be apparent to those skilled in the art. Separator film gauge thickness was determined by taking three measurements for each of three samples for each example tested and the average gauge of nine measurements was reported. Tensile property results of the following examples are based on a test similar to ASTM D-882, except as noted below. The tensile at break property was measured for wet separator materials. The crosshead speed was set at 20 inches per minute and measured using an Instron test apparatus.

EXAMPLES 1-12

In examples 1-12, a series of battery separators were evaluated. Examples 1-7, and 10 are comparative examples (Not of the Present Invention). Examples 8, 9, 11, and 12 are all examples of the present invention. Example 1 is a control example using a prior art fiber-reinforced cellulose separator available from Viskase Corporation under the trademark Sepra-Cel. All of the examples 1-12 were made using the viscose process (similar to that for manufacturing fiber reinforced sausage casings) to coat the nonwoven substrates and as described above. Comparative examples 2-6 are representative of the capabilities of paper, cellulosic, and fibrous casing type battery separators. Battery separators of various nonwoven

substrates and of a cellulose film coated onto various nonwoven substrates were obtained or made and tested. The penetration of the cellulosic film into the nonwoven substrates of examples 6, 9, and 12 was controlled to produce separators having higher absorption rates and capacities. Two viscoses which differed in the degree of polymerization were used on various samples as indicated. All of the coated samples were regenerated in the usual manner of the viscose process(described above) except that the samples were not plasticized (no glycerin), a typical requirement for battery separators. The 12 test samples were evaluated for gauge thickness over time to determine swelling and stability of thickness and also for degradation in electrolyte over time by testing wet tensile strength using a 40% KOH solution. The test conditions and results are described as follows in Table 1:

Table 1

EXAMPLE NO.	Type	Cellulose DP	Avg. Wet Gauge (mil)			
			Initial	2 Day	41 Day	83 Day
1	FRSC CONTROL	---	5.3	5.2	5.1	5.3
2	Regenerated Cellulose (R.C.)	500	3.0	3.9	3.9	3.9
3	Regenerated Cellulose (R.C.)	700	4.3	5.4	5.4	5.1
4	Cellulose Nonwoven	---	2.7	3.6	3.6	3.8
5	R.C. Coated Cellulose Nonwoven	500	3.7	5.5	5.4	5.5
6	R.C. Coated Cellulose Nonwoven	700	4.1	5.8	6.1	6.2
7	PVOH Nonwoven	---	5.8	5.8	5.8	5.9
8	R.C. Coated PVOH	500	6.3	6.6	6.8	7.0
9	R.C. Coated PVOH	700	6.7	7.1	7.3	7.7
10	Polyamide Nonwoven	---	7.2	7.6	7.8	7.8
11	R.C. Coated Polyamide Nonwoven	500	7.2	7.5	7.5	7.9
12	R.C. Coated Polyamide Nonwoven	700	7.7	8.3	8.4	8.1

Table 2

CA 02252143 1998-10-27

EXAMPLE NO.	Type	Cellulose DP	Wet Tensile Strength (T.S.) (lb/inch mil)								Retained Wet T.S. (%)	
			Initial	2 Day	6 Day	14 Day	27 Day	41 Day	55 Day	83 Day	41 Day	83 Day
1	FRSC CONTROL	---	5.6	5.7	5.7	5.8	6.2	5.9	6.2	6.2	--	--
2	Regenerated Cellulose (R.C.)	500	3.9	3.2	2.6	2.6	2.8	2.8	2.7	2.3	72	59
3	Regenerated Cellulose (R.C.)	700	4.1	2.5	2.8	3.1	3.0	3.2	2.9	2.3	78	56
4	Cellulose Nonwoven	---	1.7	0.9	0.7	0.7	0.7	0.6	0.6	0.6	35	35
5	R.C. Coated Cellulose Nonwoven	500	4.8	2.7	2.6	2.7	2.5	2.7	2.5	2.4	56	50
6	R.C. Coated Cellulose Nonwoven	700	4.3	2.5	2.4	2.4	2.5	2.2	2.3	2.3	51	53
7	PVOH Nonwoven	---	1.6	1.0	0.8	0.9	1.0	0.9	0.9	0.7	56	44
8	R.C. Coated PVOH	500	4.1	3.3	3.4	3.4	3.0	3.5	0.8*	3.0	85	73
9	R.C. Coated PVOH	700	3.7	3.4	3.3	3.2	3.1	3.1	2.9	2.9	84	78
10	Polyamide Nonwoven	---	2.3	2.1	2.0	2.0	2.2	2.3	2.1	2.2	100	96
11	R.C. Coated PolyamideNonwoven	500	4.3	4.5	4.6	4.4	4.3	4.2	4.2	4.2	98	98
12	R.C. Coated PolyamideNonwoven	700	4.1	4.1	3.8	3.8	3.8	3.9	4.0	4.1	95	100

CA 02252143 1998-10-27

Example 1 is a control example which was kept dry through the test period of 83 days except that it was soaked from about 30 minutes to 1 hour prior to measuring wet gauge and tensile properties. The similarity of test values indicates the degree of confidence in the test procedures.

Example 4 was a commercial abaca fiber cellulose nonwoven casing paper having a nominal dry gauge thickness of about 3 mil and a basis weight of about 25 g/m^2 available from C.H. Dexter Corp. Example 7 was a commercial poly(vinyl alcohol)nonwoven having a nominal dry gauge thickness of about 6 mil and a basis weight of about 55 g/m^2. Example 10 was a commercial polyamide nonwoven having a nominal dry gauge thickness of about 8 mil and a basis weight of about 65 g/m^2. Examples 5 and 6 were laboratory draw down coatings of the nonwoven of Example 4. Similarly, Examples 8 and 9 were laboratory draw down coatings of the nonwoven of Example 7. Similarly, Examples 11 and 12 were laboratory draw down coatings of the nonwoven of Example 10.

In making examples 2, 3, 5, 6, 8, 9, 11, and 12 test films were all made in the lab using a draw down technique for making coated films. In this method, a uniform coating of in this case e.g. viscose is applied to a nonwoven (or a glass plate in the case of nonfibrous pure cellulose samples) by drawing the nonwoven through a reservoir of viscose. The viscose is metered by means of a Myer bar or Bird applicator which uniformly coats the viscose film. The coated film is then placed on a needlepoint hoop and is regenerated, washed and dried in manners consistent with the viscose process.

Test films of examples 1-12 were cut into 1" wide by 2" long strips. The test films of Examples 2-12 were placed into jars containing aqueous solutions of 40% KOH. The films were then stored at room temperature and were periodically tested for gauge and wet tensile strength over a 83 day period. Prior to running the tests, the films were washed in cold tap

water for 30 minutes to 1 hour. The Instron was set at a pull speed of 1 inch per minute and 20 pounds. The tensile strength results were normalized by dividing by the wet film thickness.

The data indicate that the noncellulosic nonwovens all show substantial resistance to electrolyte degradation over time. The polyamide examples were the best and remained virtually undegraded after both 41 days and 83 days of the test period exhibiting a retained wet tensile strength of greater than 90% in both test periods for both coatings of viscose at 500 and 700 DP. The PVOH samples were also degradation resistant having a retained wet tensile strength of at least 70% for both periods with both DP values. The PVOH nonwoven alone surprisingly showed substantial degradation as did all cellulose nonwovens and the nonfiber reinforced films of cellulose. The percent of retained wet tensile strength was obtained by dividing the 41 day wet tensile value by the initial value to get the % retained strength. It is seen from the data that after only 2 days all of the cellulosic film examples which do not contain noncellulosic fibers show dramatic wet tensile strength reductions. Surprisingly the cellulose coated noncellulosic nonwovens are much more resistant to degradation and in the case of PVOH synergistically so. The above films of Examples 8, 9, 11, and 12 all exhibit suitable properties for use as battery separators. The higher viscose (700 DP) examples should also demonstrate improved absorption rates and capacities. Also incorporated herein by reference is a conference paper entitled "Strength Properties of Separators in Alkaline Solutions", by Thomas Danko.

In order to stabilize the battery separators against curl they may be held at elevated temperatures of at least 40 °C for at least 8 hours in the presence of a controlled amount of moisture to produce a separator stabilized against curling which has a moisture content of from 4 to 25 weight % based upon the bone dry gauge of the separator.

Also, all of the inventive examples produced separators which are delamination

resistant due to strong bonds between the cellulose film and nonwoven substrate. No noncellulosic glue or adhesive was necessary in this process.

EXAMPLES 13-14

Except as noted below, two battery separators were made according to the process of the invention as described above with respect to the drawing (Fig. 1). Example 13 was a wet lay polyamide nonwoven substrate which was extrusion coated on one side with regenerated cellulose to form a tubular battery separator. Example 14 was made similar to Example 13 except a spunbonded polyamide nonwoven was used. Both separators were reeled and then evaluated for curl. The separator of Example 13 exhibited a slight degree of curl while the separator of Example 14 exhibited severe curl rendering it totally unacceptable for use in high speed battery manufacture. Reels of separator having a moisture content between 4 to 25 weight % for both Examples 13 and 14 were placed in plastic bags which were closed and placed in a hot room held at 47°C. After 16 hours the separators were removed, the bags opened, the taped end of the separator removed, a section of separator from the reel was then observed for curl and in both separators the curl was reduced to a barely noticable level. The curl present was at an acceptable level. The reels of separator for both Examples were stabilized against curl. Additional similarly made separators were obtained and held for greater lengths of time with further improvements in stabilizing the separators against curl observed. A 168 hour holding time at 47°C for a polyamide nonwoven substrate has yielded excellent results with long term stability.

A major problem with the use of nonwoven cellulose substrate alone and to a lesser extent with only cellulose fiber reinforcements, such as paper, is the high rate of degradation of the substrate in contact with the electrolyte which leads to an unacceptably or undesirably high rate of premature battery failure. Battery separators of the present invention resist

electrolyte degradation and are suitable for production of commercial batteries by modern high speed manufacturing processes..

The above examples serve only to illustrate the invention and its advantages, and they should not be interpreted as limiting since further modifications of the disclosed invention will be apparent to those skilled in the art. All such modifications are deemed to be within the scope of the invention as defined by the following claims.

What is claimed is:

1. A process for making a battery separator comprising:

(a) contacting (i) a nonwoven substrate comprising noncellulosic fibers with (ii) a liquid cellulose or cellulose derivative solution on at least one side of said substrate; (b) converting said solution to a solid cellulose or cellulose derivative film to form a coated substrate; (c) washing said coated substrate in an aqueous solution; (d) drying said coated substrate under biaxial tension to provide a battery separator; and (e) holding said separator for at least 8 hours at an elevated temperature of at least 40°C in the presence of a controlled amount of moisture to produce a separator stabilized against curling which has a moisture content of from about 4 to 25 weight percent based upon the bone dry gauge of said separator.

2. A process for making a battery separator, as defined in claim 1, wherein said separator during said holding step (e) is held under a machine direction tension of from about 1 to 4 pounds per linear inch(width) for a double layer of said separator.

3. A process for making a battery separator, as defined in claim 1, wherein said separator during said holding step (e) is held under said elevated temperature for at least 16 hours.

4. A process for making a battery separator, as defined in claim 1, wherein said separator during said holding step (e) is held under said elevated temperature for at least 24 hours.

5. A process for making a battery separator, as defined in claim 1, wherein said separator during said holding step (e) is held under said elevated temperature for at least 48 hours.

6. A process for making a battery separator, as defined in claim 1, wherein said separator during said holding step (e) is held under said elevated temperature for at least 120 hours.

7. A process for making a battery separator, as defined in claim 1, wherein said separator during said holding step (e) is held under said elevated temperature for at least 168 hours.

8. A process for making a battery separator, as defined in claim 1, wherein said separator during said holding step (e) is held at a temperature of at least 45°C.

9. A process, as defined in claim 1, wherein said moisture content of step (e) is from about 4 to 12 weight percent BDG.

10. A process, as defined in claim 1, wherein said cellulosic coating has a degree of polymerization of at least 350.

11. A process, as defined in claim 10, wherein said degree of polymerization is at least 600.

12. A process, as defined in claim 1, wherein said stabilized separator has an absorption rate of at least 6 mm/5 min. of an aqueous 30 wt. % KOH solution.

13. A process for making a battery separator, as defined in claim 1, wherein said separator has a 30% KOH absorption capacity of at least 200 g/m^2.

14. A process, as defined in claim 1, wherein said substrate is in the shape of a tube as said solution is solidified.

15. A process for making a battery separator, as defined in claim 1, wherein said stabilized separator has a retained wet tensile strength after 83 days of at least 70%.

16. A process for making a battery separator, as defined in claim 1, wherein said stabilized separator has a retained wet tensile strength after 41 days of at least 90%.

17. A process for making a battery separator, as defined in claim 1, wherein said stabilized separator has a retained wet tensile strength after 83 days of at least 90%.

18. A process for making a battery separator, as defined in claim 1, wherein said noncellulosic fibers comprise at least 50 weight % of said nonwoven substrate.

19. A process for making a battery separator, as defined in claim 1, wherein said noncellulosic fibers comprise at least 95 weight % of said nonwoven substrate.

20. A process for making a battery separator, as defined in claim 1, wherein said nonwoven noncellulosic substrate comprises polyolefin fibers, polyamide fibers, polyester fibers, or poly(vinyl alcohol) fibers, or blends thereof.

21. A process for making a battery separator, as defined in claim 20, wherein said nonwoven substrate further comprises natural cellulose fibers, synthetic cellulose fibers, or blends thereof.

22. A process for making a battery separator, as defined in claim 1, wherein said nonwoven substrate comprises nylon 6; nylon 66; nylon 11; nylon 12; nylon 6,12; nylon 6/12 copolymer; nylon 6/66 copolymer or blends thereof.

23. A process for making a battery separator, as defined in claim 1, wherein said nonwoven substrate comprises at least 95 weight % polyamide fibers.

24. A process for making a battery separator, as defined in claim 1, wherein said nonwoven substrate is a spun bonded substrate.

25. A process for making a battery separator, as defined in claim 1, wherein said nonwoven substrate is a wet laid substrate.

26. A process for making a battery separator, as defined in claim 1, wherein said nonwoven substrate is a dry laid substrate.

27. A process for making a battery separator, as defined in claim 24, wherein said nonwoven substrate is a polyamide.

28. A process for making a battery separator, as defined in claim 25, wherein said nonwoven substrate is a polyamide.

29. A process for making a battery separator, as defined in claim 26, wherein said nonwoven substrate is a polyamide.

30. A process for making a battery separator, as defined in claim 1, wherein said cellulose coating comprises regenerated cellulose.

31. A process for making a battery separator, as defined in claim 1, wherein said cellulose coating is derived from a cellulose material comprising at least 90 % α-cellulose.

32. A process for making a battery separator, as defined in claim 1, wherein said cellulosic solution (ii) of step (a) is applied by extrusion coating.

33. A process for making a battery separator, as defined in claim 1, wherein the cellulose coating on said substrate comprises at least about 60 wt. % bone dry gauge based on the weight of the nonwoven substrate.

34. A process for making a battery separator, as defined in claim 1, wherein said stabilized separator has a thickness of 20 mils(508 microns) or less.

35. A battery separator stabilized against curling which is made by the process of any one of claims 1 to 34.

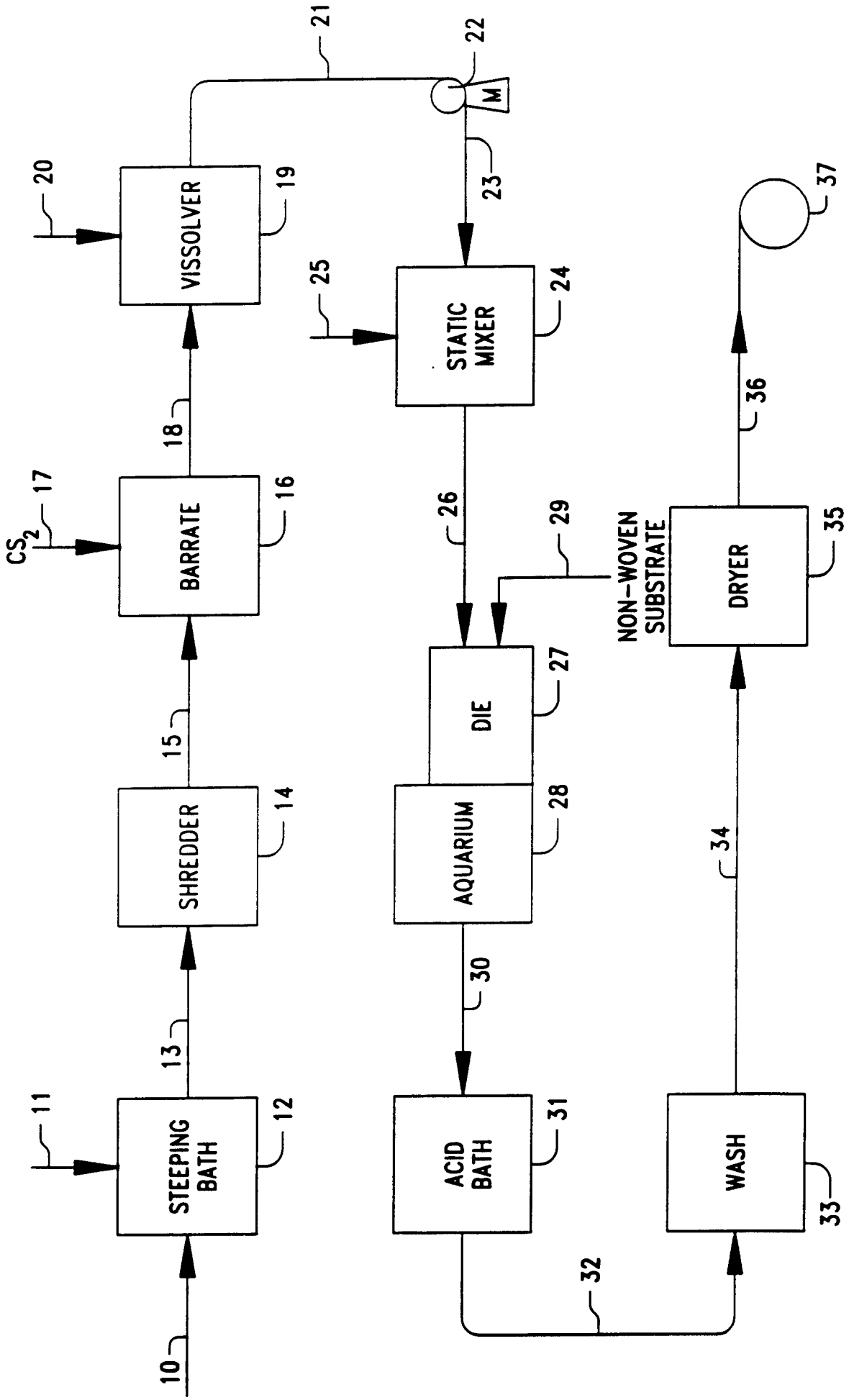
10
STEEPING BATH
12
11
13
SHREDDER
14
15
BARRATE
16
CS_2
17
18
VISSOLVER
19
20
21
22
M
23
STATIC MIXER
24
25
26
DIE
27
AQUARIUM
28
29
NON-WOVEN SUBSTRATE
30
ACID BATH
31
32
WASH
33
34
DRYER
35
36
37

FIG. 1

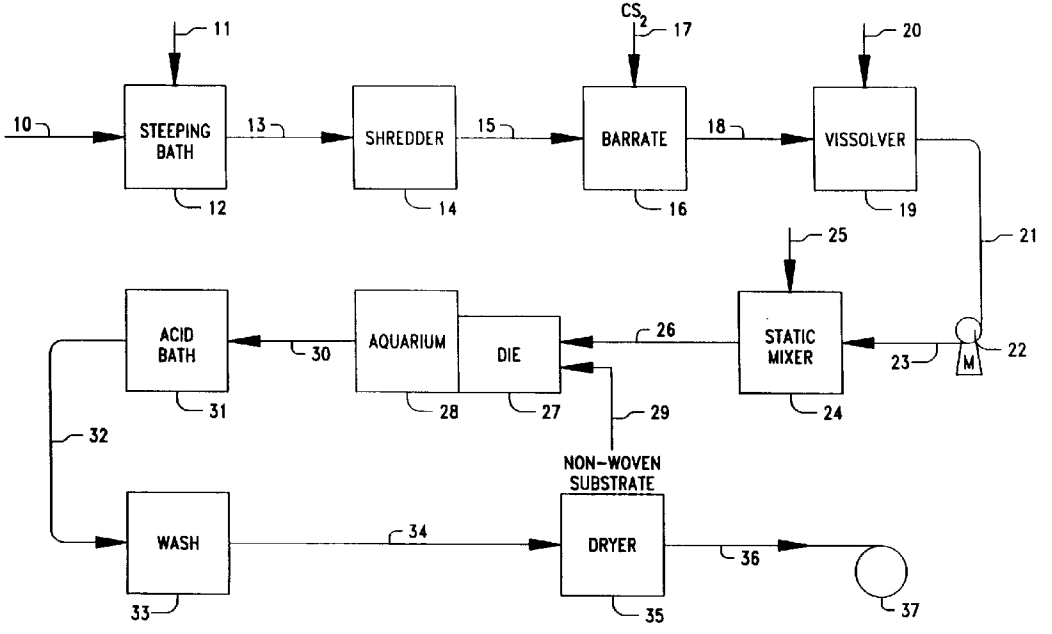
11
CS2
17
20
10
STEEPING BATH
13
SHREDDER
15
BARRATE
18
VISSOLVER
12
14
16
19
21
25
ACID BATH
30
AQUARIUM
DIE
26
STATIC MIXER
M
22
23
31
28
27
24
29
32
NON-WOVEN SUBSTRATE
WASH
34
DRYER
36
37
33
35