J. B. BAUMAN.

Improvement in Wheels for Vehicles.

No. 129,518. Patented July 16, 1872.

Fig. 1.

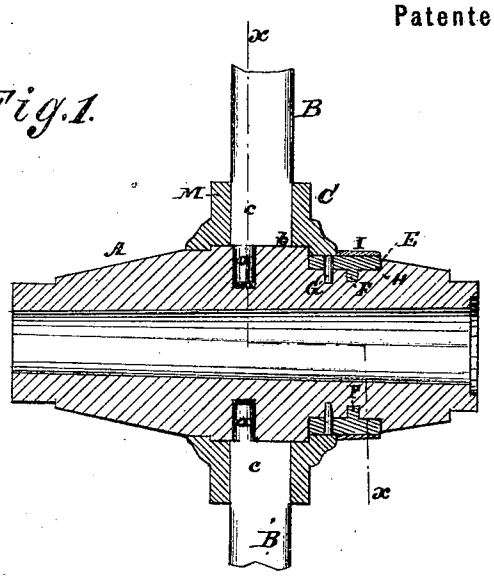

Fig. 2.

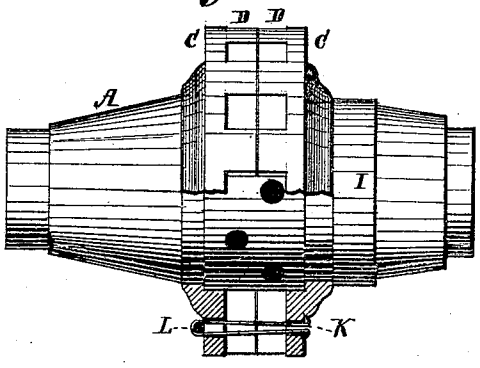

Fig. 3.

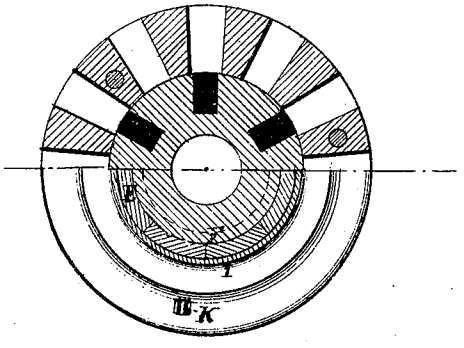

Witnesses:
J. Martyn.
Thos. L. L. Durand

Inventor:
Jesse B. Bauman
Per Munn & Co
Attorneys.

AM. PHOTO-LITHOGRAPHIC CO. N.Y. (OSBORNE'S PROCESS.)

UNITED STATES PATENT OFFICE.

JESSE B. BAUMAN, OF SHEPHERDSTOWN, PENNSYLVANIA.

IMPROVEMENT IN WHEELS FOR VEHICLES.

Specification forming part of Letters Patent No. 129,518, dated July 16, 1872.

Specification describing an Improvement in Carriage-Wheel Hubs, invented by JESSE B. BAUMAN, of Shepherdstown, in the county of Cumberland and State of Pennsylvania.

This invention relates to an improvement in carriage-wheels; and has for its object to produce a hub and peculiar-shaped spokes, which will simplify the construction of the wheel while sustaining a greater degree of wear and pressure than the ordinary wheels heretofore in use. The invention consists, chiefly, in the combination of a wooden hub having a central row of spoke mortises arranged in a zigzag line with two lateral clamping plates or collars, which are provided with internal tapering lugs or projections forming, when applied to the hub, mortises or sockets for receiving and clamping the spokes. The second part of my invention consists in the manner of attaching the clamping-plates to the hub by embedding or countersinking the horizontal flanges formed thereon into the surface of the same, and then securing them in place by bands driven over them. The invention further consists in connecting the two clamping-collars, after application to the hub, by means of split or bow-shaped keys and wedges, which will allow the spokes to be tightened with facility.

Figure 1 is a longitudinal sectional view of the hub. Fig. 2 is a side elevation of the same with parts in sectional detail. Fig. 3 is a section through the line *x x*, Fig. 1.

A represents the body of the hub, formed of wood, and having in its central portion, which is somewhat raised, a series of circular mortises, which are arranged in a zigzag line or alternately set to the right or left. B are the spokes, which are formed with round tenons *a* corresponding in shape to the mortises in the hub, and with square shoulders *b* and inclined or tapering surfaces *c* immediately above the same. C represents the clamping collars or plates, provided with tapering or wedge-shaped projections or lugs D on their inner or adjoining faces, which, when applied to the hub, will form sockets for the reception of the tapering surfaces of the spokes. E are horizontal circular flanges, formed or attached to the clamping-collars C, and made in one or more pieces. Said flanges E are provided on their under sides with a rib, F, and pins G, the former of which enters a continuous groove turned in the hub, and the latter in openings formed in the same. H is the countersunk portion of the hub, formed around the center of the same, for the purpose of receiving the horizontal flanges E on the collars C, after which a detachable band or ring, I, is driven over the same to secure them in place. K are bow-shaped pieces, the ends of which project through openings in one of the collars C, while their opposite ends are secured to the other collar. L are wedge-shaped keys passed through the projecting part of the bow pieces, for the purpose of securing the collars, and drawing the same against the spokes whenever it is necessary to tighten them.

Instead of the fastening device, above described, wood screws, requiring no burr or square head on the outside, may be employed.

I do not confine myself to the exact construction of the parts above described, as the hub may be made entirely of metal, with the flanges countersunk and secured in the manner described; and instead of the clamping-collars being both alike, one of the same may be made plain, and rest directly upon the surface of the hub, as shown in the drawing at M.

Having thus described my invention, what I claim as new, and desire to secure by Letters Patent, is—

1. A carriage-wheel hub, consisting of a wooden body, a straight circumferential row of spokes, and two lateral clamping-collars, when said spokes are provided with tenons arranged alternately on their opposite sides, and the hub formed with a series of zigzag mortises for receiving the tenons, as herein shown and described.

2. The clamping-collars C, provided with tapering projections D, and horizontal flanges E

embedded or countersunk in the wooden hub, and secured in position by bands I fitted over the same, substantially as described.

3. The ribs F and pins G, formed on the horizontal portion of the clamping-collars, and entering corresponding grooves and holes in the hub, as and for the purpose specified.

4. The spoke-clamping plates C C, connected together by means of bow-shaped pieces K and wedge-keys L, or other equivalent fastening devices, substantially as described and shown.

JESSE B. BAUMAN.

Witnesses:
R. WILSON,
JOSEPH LEAS.