June 19, 1956 E. D. O'BRIAN 2,751,116

TOY WATER GUNS

Filed Jan. 26, 1956

FIG. 1.

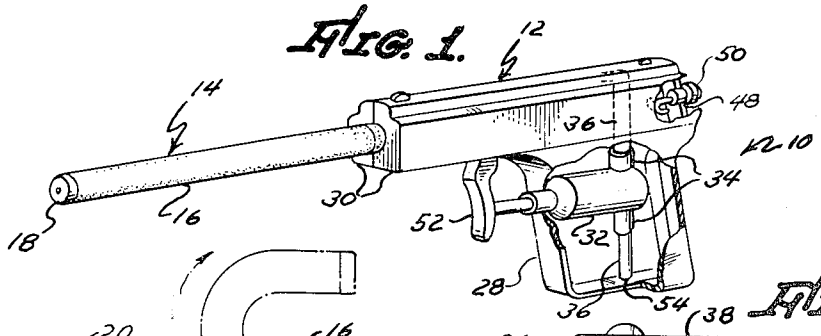

FIG. 2.

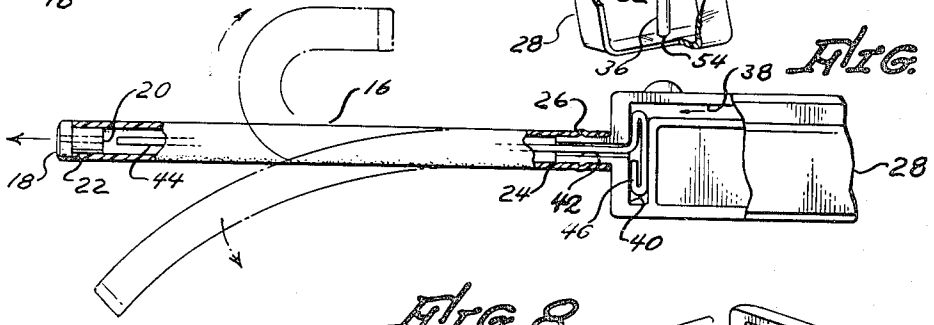

FIG. 8.

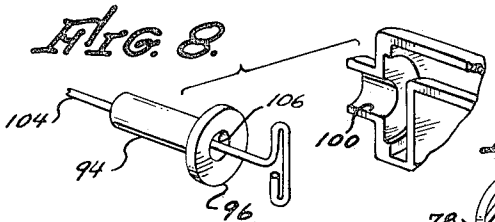

FIG. 5.

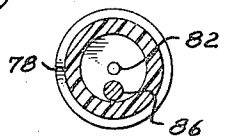

FIG. 3.

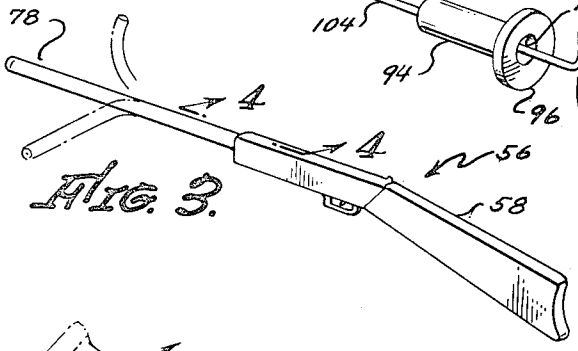

FIG. 6.

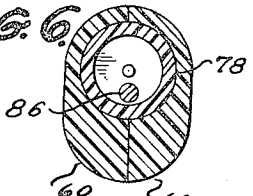

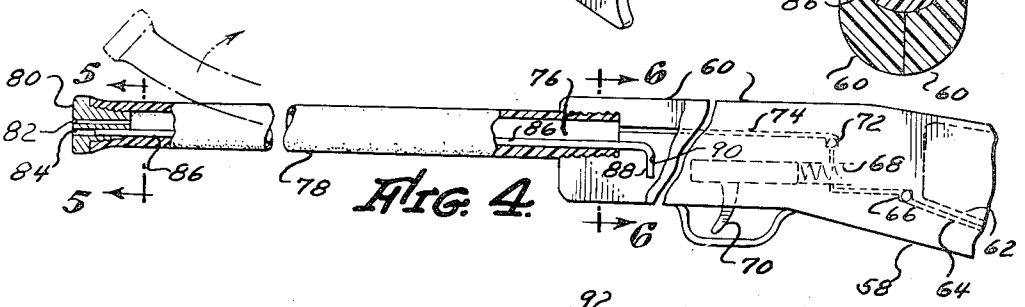

FIG. 4.

FIG. 7.

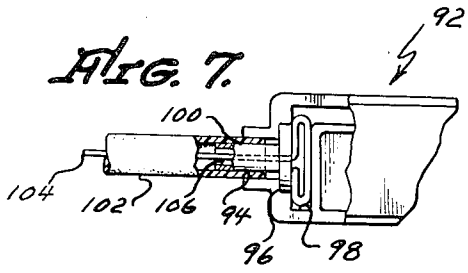

INVENTOR.

Edward D. O'Brian

United States Patent Office 2,751,116 Patented June 19, 1956

2,751,116

TOY WATER GUNS

Edward D. O'Brian, Anaheim, Calif.

Application January 26, 1956, Serial No. 561,387

13 Claims. (Cl. 222—79)

This invention relates primarily to new and improved toy water guns, and is a continuation in part of the co-pending application entitled Toy Guns, Serial No. 518,021, filed June 27, 1955.

A number of distinctly different factors should be taken into consideration in designing new toys for children. One of these factors is the normal desire of a child to have toys which simulate adult implements. Mere simulation frequently is not sufficient to attract the attention of a child to a new toy, however, particularly in the case where the structure simulated is infrequently used by adults. A toy of this category should go a step further and do something which will excite the imagination of not only a child but an adult. Thus, a large number of different toys have been developed in which the operative action tends to relate to possible future scientific development.

It is an object of this invention to provide toy water guns meeting the broad qualifications indicated in the preceding paragraph. More specifically, the toy water guns of this invention are designed so that either a child or an adult may use them to direct a sometimes unwanted stream of water in virtually any direction. Thus the new guns of this invention can be used to squirt water around a corner or an object without exposing the operator of the gun to view. They can also be used in the conventional manner of any water gun and in other manners which tend to amuse people.

The toy water guns of the present invention possess other, perhaps more desirable characteristics, than those derived from the fact that they could be shot in an almost indeterminable variety of directions. A conventional completely rigid toy can, in the hands of an angry child, be a somewhat dangerous weapon. Children are especially prone to knock each other or furniture with an extended portion of a gun under certain circumstances. With this invention the barrels of toy water guns are made in a flexible manner so that they will not cause serious damage when applied with force to an object.

Because of the nature of this invention it is not considered necessary or advisable to encumber this specification with a long list of so-called objects. The basic features of this invention as well as the above and other advantages of it will be realized from a consideration of the remainder of this specification including the appended claims and the accompanying drawings in which:

Fig. 1 is a perspective view, partially in section, of a preferred form of a toy water gun of this invention;

Fig. 2 is a side view of part of the water gun shown in Fig. 1, portions of this view being taken in section;

Fig. 3 is a perspective view of a modified toy water gun of the invention;

Fig. 4 is a side view similar to Fig. 2 of the gun shown in Fig. 3;

Figs. 5 and 6 are cross-sectional views taken at lines 5—5 and 6—6 respectively of Fig. 4 of the drawings;

Fig. 7 is a partial side view, portions of which are in section, of another modified toy water gun of the invention similar to that shown in Fig. 1; and

Fig. 8 is an expanded view in perspective of certain of the parts used in the gun shown in Fig. 7 indicating the manner of assembly.

It is to be understood that the accompanying drawings are primarily designed so as to indicate to those familiar with the manufacture and design of toys various preferred manners of constructing toy water guns in accordance with this invention. Obviously the invention is not to be considered as being limited to guns having the precise sizes and shapes illustrated. It it possible to easily form a wide variety of different gun structures having different appearances utilizing the basic features of this invention as set forth in this specification.

In order to aid in understanding the present invention it may be stated by way of a summary that each of the toy water guns falling within the scope of this disclosure includes an elongated barrel, which barrel is comparatively flexible and yet is sufficiently rigid so as to be self-supporting when bent to any desired configuration or shape. The actual nature of the invention is considered to be more fully summarized and defined by the appended claims.

In Figs. 1 and 2 of the drawings there is shown a toy water gun 10 of the invention having the essential form of an automatic pistol. This water gun differs from a conventional water gun in having a two-part barrel consisting of a first part 12 and an extending second part 14. This extending part 14 includes a comparatively elongated tube 16 of a flexible resinous material such as a polyvinyl composition, polyethylene or the like. Within the end of the tube 16, extended from the gun 10, there is located a tip 18 having formed therein an aperture 20 serving as a nozzle for the gun 10. This tip 18 may be formed of either metal or plastic in ways known to the art, fits closely within the tube 16 so as to seal the end of the tube 16 so that water may pass only through the aperture 20, and is preferably sealed or otherwise similarly secured to the tube 16 by an adhesive, or by heat sealing if the tip 18 is of a plastic composition, or by other equivalent means known to the art. A flange 22 on the tip 18 prevents the tip from being inserted completely within the tube 16.

The end of the tube 16 adjacent to the first part 12 is attached to this first part by fitting over a projecting generally cylindrical bushing 24. The bushing itself is preferably formed with an external bead 26 serving to aid in holding the tube 16 in place. If desired, the tube 16 may be attached to the bushing 24 by the use of an adhesive as indicated above or through the use of heat sealing if the bushing 24 is formed of an appropriate plastic material.

With the preferred construction of the invention, the exterior parts of the gun 10 excepting the second part 14 are formed out of a rigid plastic such as polystyrene by established moulding techniques so as to constitute a housing 28 serving as a gun stock formed of two bilaterally symmetrical parts 30. These two parts are adapted to fit together so as to hold a pump 32 having attached thereto ball valves 34 which may be similar to valves 66 and 72 subsequently described in this specification and extending tubes 36 in an operative position with the upper one of these tubes 36 communicating with a groove 38, half of which is formed in each of the parts 30 in a portion of the housing 28 serving as a handle. This groove 38 extends along the length of the first part 12 through the housing 28 to a nonround chamber 40 formed similarly to the groove 38 so that half of the chamber is located within each of the parts 30. The chamber 40 is located transversely to the axis of the second part 14 and communicates to the interior of the tube 16 through a small passage 42 extending through the bushing 24. One half of the bushing is formed by each of the parts 30.

A wire 44 having a bent end 46 is located so that this bent end is held within the chamber 40 and so that the remainder of the wire extends through the passage 42 substantially throughout the length of the tube 16. As can be seen from Fig. 2 of the drawing, the wire 44 is of smaller diameter than the internal diameter of the tube 16. The bent end 46 serves to prevent rotation of the wire 44 by fitting against the walls of the chamber 40. The material from which the wire 44 is formed is important with the instant invention, as this wire contributes materially to the operative features of the invention. Suitable materials are soft copper or copper alloys, soft aluminum or aluminum alloys and the like. These materials are substantially unaffected by water and hence will not give rise to rust or the like which will tend to clog the aperture 20 during use of the gun 10. Further, these materials may be readily bent by a child to virtually any desired configuration and are self supporting when so bent. Thus, with the instant invention, the second part 14 is comparatively flexible and yet is sufficiently rigid so that a child can bend it to positions such as are indicated by the lines shown in Fig. 2. The barrel can, of course, be bent to other configurations and in a commercial embodiment of the invention can even be tied in overhand knot. When so bent, the tip 18 remains in the position where it is located as the gun 10 is used, enabling the gun to be shot around a corner or the like.

Water, or other liquid, may be introduced into the gun 10 through an opening 48 in the housing 28 so as to be carried within this housing. A small rubber or other equivalent plug 50 is used so as to close the opening 48 in order to prevent loss of water. The pump 32 is designed to be actuated by means of a trigger 52 slidably mounted in a conventional manner in a groove upon the base of the first part 12 of the barrel. When the trigger is so actuated, water will flow up from an open end 54 in one of the tubes 36 and out through the aperture 20 in the tip 18 serving as a nozzle. The wire 44 normally prevents complete constriction of the tube 16 when this tube is bent so as to prevent liquid flow through it.

In Figs. 3 and 4 of the drawing, there is shown a modified toy water gun 56 of the invention which employs a gun stock or handle 58 which is preferably formed with two rigid bilaterally symmetrical sections 60 so that when these sections are secured against one another during assembly they define within the stock a reservoir 62 from which there leads a passage 64 which in turn leads to a ball valve 66. This ball valve is connected to a pump 68 of conventional design so that when a trigger 70 is pulled water will be forced from the pump 68 past another ball valve 72 through a passage 74 leading to the interior of a cylindrical cavity 76. The interior walls of this cavity 76 are preferably serrated so that when the sections are placed together a flexible tube 78 of the category previously described is held so as to project from the stock 58. Within the end of this tube remote from the stock 58 there is located a tip 80 similar to the tip 18 previously described. This tip includes, in addition to an aperture 82 adapted to serve as a nozzle, an opening 84. A wire 86 similar to the wire 44 previously described is preferably secured within this opening 84 in any convenient manner as through the use of adhesive, rivets or the like so as to extend back through the tube 78 and through the cavity 76 to where it is provided with a bent end 88 which is adapted to fit within a correspondingly shaped groove 90. This groove serves to prevent rotation of the wire 86. Each of the sections 60 carries one half of the groove 90 in a similar manner to which each of the sections 60 is designed to form one half of the passages 64 and 74. If desired, even the housing for the pump 86 and the wall structure defining the ball valves 66 and 72 and the means connecting these ball valves with the pump 68 may be formed

in a similar manner so that one half of each is formed within each of the sections 60. The trigger 70 preferably projects outwardly from the pump 68 so as to be conveniently actuated.

The modified toy water gun 56 differs from the gun 10 in several respects. One of these is that the wire 86 serves to help aid in retaining the tip 80 in position in the end of the tube 78. The wire also, when used in the manner shown, serves to aid in holding the tube 78 in position. In spite of this, it is frequently desirable to use means such as an adhesive or the like to aid in positioning the tube 78 in a secure manner.

In Fig. 7, part of a modified toy water gun 92 of the invention is shown. This modified structure is similar to that shown in Figs. 1 and 2 of the drawings, but differs primarily in that a small bushing 94 having an enlarged collar 96 is located so that the collar 96 is positioned within a chamber 98 corresponding to the chamber 40 previously described. This bushing extends outwardly through an enlarged passage 100 similar to the passage 42 previously described. A tube 102, similar to the tube 16, is located around the bushing 94 so as to be held tightly against it by the walls forming the passage 100. A wire 104 similar to the wire 44 extends through an opening 106 in the bushing 94. This method of construction aids in tightly holding the tube employed so as to prevent accidental dislodgement of it by a child. If desired, an adhesive or other means as previously described can be employed to aid in holding this tube 102 in place. The other portions of the modified gun 92 are identical with the gun 10 previously described and hence will not be specifically recited here.

It should be obvious from a consideration of the aforegoing, that this invention is capable of wide modification without departing from the essential features of it. As an example of some of the modifications which may be made, the wires used in either the gun 10 or the gun 92 can be provided with bent ends having a shape other than specifically shown. All such modifications are to be considered as part of the inventive concept present here insofar as they are defined by the appended claims.

I claim:

1. A toy gun which includes a barrel comprising: an elongated hollow tube of flexible material; and means capable of being easily bent by a child, said means being self supporting when bent to a desired configuration, said means extending substantially the length of said tube of flexible material so as to support said tube.

2. A new and improved toy gun which includes an elongated barrel, said barrel comprising: a hollow tube of flexible material; and a wire capable of being bent by a child located within said tube, said wire being self supporting when bent to any desired configuration and being of smaller diameter than the internal diameter of said tube.

3. A water gun which includes: a gun stock; a pumping unit disposed in said gun stock; trigger means for activating said pumping unit; a gun barrel attached to said gun stock, said gun barrel including an elongated flexible hollow tube and means operatively connected with said tube capable of being easily bent to any desired configuration, said means being self supporting when bent to a desired configuration and extending along the length of said tube so as to be capable of holding said tube in a desired configuration when bent; and passage means connecting said gun barrel with said pumping unit.

4. A toy gun which comprises: a gun stock; a flexible hollow tube attached at one end thereof to said gun stock so as to project from said gun stock; a wire capable of being easily bent to any desired configuration and being self supporting when bent to a desired configuration, said wire being operatively associated with said tube so as to extend along said tube and so as to be capable of holding said tube in a desired configuration; means disposed in said gun stock for shooting said gun; and trigger means for activating said means for shooting said gun.

5. A toy water gun which comprises: a rigid housing serving as a gun stock; a bushing extending from said housing; means defining a passage through said bushing; an elongated tube of flexible resinous material positioned on said bushing so as to extend from said housing; a tip having an aperture therein serving as a nozzle positioned within the end of said tube remote from said bushing, said tip fitting within said tube so as to seal the end of said tube so that a liquid may only pass from said tube through said aperture; a wire capable of being bent to a desired configuration and being self supporting when so bent positioned so as to extend through said passage to within said tube, said wire extending substantially throughout the length of said tube; means for preventing rotation of said wire; means disposed within said housing for causing a liquid to flow through said passage, said tube and said aperture; and means for actuating said means for causing a liquid to flow.

6. A toy water gun as defined in claim 5 wherein said bushing is formed integrally with said housing.

7. A toy water gun as defined in claim 5 wherein said housing is formed with an opening therein and wherein said bushing is positioned within said opening, and wherein said tube is held between said bushing and said housing.

8. A toy water gun which comprises: a rigid housing serving as a gun stock, said housing having an opening formed therein; an elongated tube of flexible resinous material attached to said housing so that the center of said tube is in communication with said opening; a tip having an aperture therein serving as a nozzle positioned within the end of said tube remote from said housing, said tip fitting within said tube so as to seal the end of said tube so that a liquid may pass from said tube only through said aperture; a wire capable of being bent to a desired configuration and being self supporting when so bent positioned so as to extend through said opening to within said tube, said wire extending substantially throughout the length of said tube; means formed on said wire for preventing rotation of said wire, said means formed on said wire coacting with part of said housing so as to prevent rotation of said wire; means disposed within said housing for causing a liquid to flow through said opening, said tube and said aperture; and means for actuating said means for causing a liquid to flow.

9. A toy water gun as defined in claim 8 wherein one end of said wire is attached to said tip and wherein said means formed in said wire comprises a bent portion of said wire, said bent portion being engaged by part of said housing so as to prevent the rotation of said wire.

10. A toy water gun as defined in claim 8 wherein said opening comprises an interior cylindrical cavity and wherein said tube is held within said cavity.

11. A toy water gun which comprises: a rigid housing serving as a gun stock, said housing having an opening formed therin; an elongated tube of flexible, resinous material attached to said housing so that the center of said tube is in communication with said opening; a tip

having an aperture therein serving as a nozzle positioned within the end of said tube remote from said housing, said tip fitting within said tube so as to seal the end of said tube so that water may pass from said housing through said tube only through said aperture; a comparatively flexible wire which is sufficiently rigid so that it can be bent to a desired position located so as to extend through said opening to within said tube, said wire extending substantially throughout the length of said tube; means for preventing rotation of said wire; means disposed within said housing for causing water to flow through said opening into said tube and through said aperture; and trigger means for actuating said means for causing water to flow.

12. A toy gun which comprises: a gun stock; a hollow flexible tube attached at one end thereof to said gun stock so as to project away from said gun stock; a wire capable of being easily bent to any desired configuration and being self supporting when bent to a desired configuration, said wire being positioned within said tube so as to hold said tube in a configuration corresponding to the configuration of said wire and being of smaller diameter than the internal diameter of said tube; means for preventing rotation of said wire; means disposed in said gun stock for shooting said gun; and trigger means for activating said means for shooting said gun.

13. A toy water gun whiuh comprises: a rigid housing serving as a gun stock, said housing having an opening formed therein; an elongated tube of flexible, resinous material attached to said housing so that the center of said tube is in communication with said opening; a tip having an aperture therein serving as a nozzle positioned within the end of said tube remote from said housing, said tip fitting within said tube so as to seal the end of said tube so that a liquid may pass from said tube only through said aperture; a wire capable of being bent to a desired configuration and being self supporting when so bent positioned so as to extend through said opening to within said tube, said wire extending substantially throughout the length of said tube and being of smaller diameter than the internal diameter of said tube; means formed on said wire for preventing rotation of said wire; means disposed within said housing for causing a liquid to flow through said opening, said tube and said aperture; and means for actuating said means for causing a liquid to flow.

References Cited in the file of this patent

UNITED STATES PATENTS

277,496	Marks	May 15, 1883
825,270	Guilliford	July 3, 1906
958,711	De Moulin	May 17, 1910
958,712	Riggs	May 17, 1910
1,102,948	Norton	July 7, 1914
2,061,817	Van Cleef	Nov. 24, 1936
2,392,024	Couri	Jan. 1, 1946
2,542,601	Van Cleef	Feb. 20, 1951