Sept. 13, 1938. H. E. WILLIAMS 2,129,897

MERCHANDISE VENDING MACHINE

Filed May 11, 1936

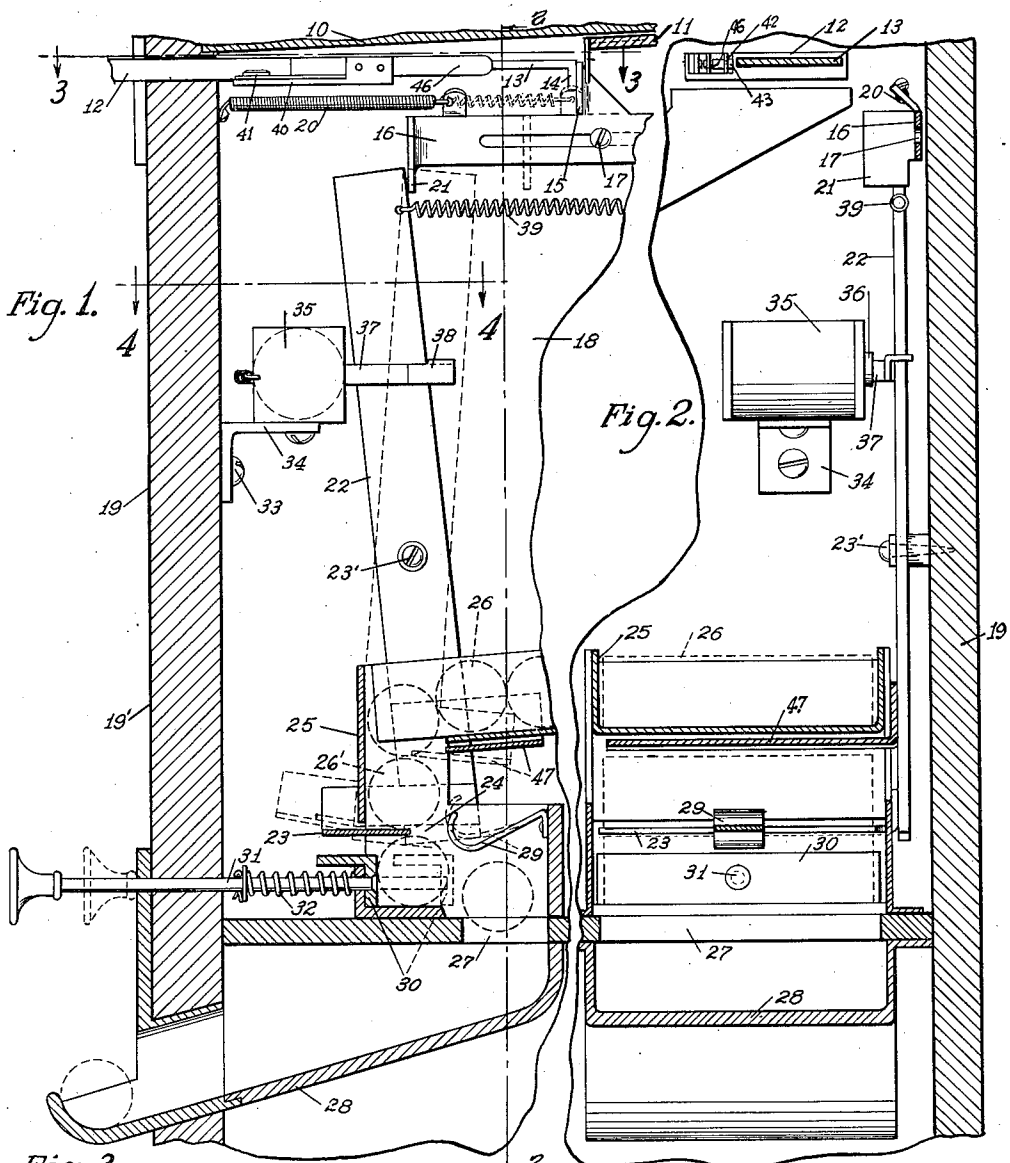

Fig. 1.

Fig. 2.

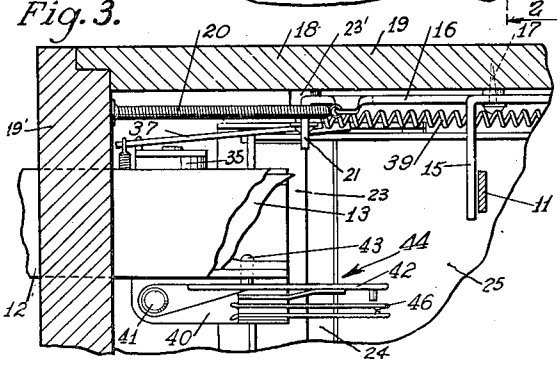

Fig. 3.

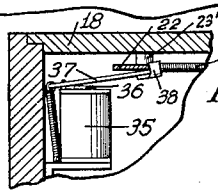

Fig. 4.

INVENTOR.
Harry E. Williams
BY Clarence E. Threedy
HIS ATTORNEY.

Patented Sept. 13, 1938

2,129,897

UNITED STATES PATENT OFFICE

2,129,897

MERCHANDISE VENDING MACHINE

Harry E. Williams, Chicago, Ill., assignor to Rock-Ola Manufacturing Corporation, Chicago, Ill., a corporation of Delaware

Application May 11, 1936, Serial No. 78,968

5 Claims. (Cl. 312—47)

This invention relates to certain novel improvements in coin-controlled vending machines, and has for its principal object the provision of an improved construction of this character which will be highly efficient in use and economical in manufacture.

Among the salient objects of this invention is the provision of a merchandise vending mechanism which may be associated with or assembled as a part of an amusement game apparatus, such as, for example, the conventional and well known bagatelle pin games, in which there is employed a slidable panel for supporting the balls upon the playboard of the apparatus.

With the merchandise vending mechanism associated with or assembled as a part of a conventional and well known bagatelle pin game, it is the object to provide mechanism for controlling both the operation of the bagatelle pin game and the merchandise vending mechanism, whereby a piece of merchandise is vended each time the coin slide of the bagatelle pin game is manipulated to permit operation and play of the bagatelle game.

Other objects will appear hereinafter.

The invention consists in the novel combination and arrangement of parts to be hereinafter described and claimed.

The invention will be best understood by reference to the accompanying drawing showing the preferred form of construction, and in which:

Fig. 1 is a fragmentary vertical sectional detail view of the invention;

Fig. 2 is a fragmentary vertical sectional detail view of the invention taken substantially on line 2—2 of Fig. 1;

Fig. 3 is a fragmentary sectional detail view of the invention taken substantially on line 3—3 of Fig. 1; and

Fig. 4 is a fragmentary sectional detail view of the invention taken substantially on line 4—4 of Fig. 1.

Referring more particularly to the drawings, in which the preferred form of construction of my invention is illustrated, 10 indicates a play board of a bagatelle game upon which balls are adapted to be projected in the usual manner for gravitation from the upper end thereof.

Beneath this playboard 10 is a slidable panel 11 of the usual construction, and serving to support balls in ball exit openings (not shown) formed in the playboard 10. Movement of this panel 11 is accomplished through the medium of a coin slide structure indicated at 12. A coin slide device suitable for this purpose may be one of the type shown in U. S. Patent 2,049,597 to W. A. Tratsch. This coin slide structure includes a slide member or bar 13, which in the present instance is provided with a depending finger 14 adapted to engage a finger 15 carried by a feed-operating bar 16 slidably mounted through the medium of a slot and pin connection 17 to an adjacent wall 18 of the cabinet 19 of the apparatus. This bar 16, in turn, is connected in any suitable manner to the panel 11, whereby when the bar 16 is moved by action of the coin slide 12 in a direction against the action of a spring 20, the panel 11 will be moved in a position to permit the balls (not shown) to pass through the ball exit openings (not shown) formed in the playboard 10.

This bar 16 is provided with a finger 21, and this finger 21 is adapted to operably engage an arm 22 pivotally connected to the side wall 18, as at 23'. The lower end portion of this arm 22 is provided with a seat 23 normally obstructing a discharge opening 24 of a trough 25 through which merchandise 26 is adapted to pass. There is likewise provided on the lower end portion of the arm 22 in spaced relation with respect to the seat 23 an auxiliary seat portion 47 which is so constructed as to obstruct passage of merchandise 26 from the trough 25 into the opening 24 when the seat 23 is disposed in unobstructing position (dotted lines, Fig. 1).

The discharge opening 24 communicates with the upper end portion 27 of a chute 28 through which the discharged merchandise rolls to a position to be manually removed from the chute 28.

Cooperating with the seat 23 to hold the merchandise from movement into the chute 27 is a resilient finger 29. Movably mounted beneath the seat 23 and adjacent the discharge opening 24 is an ejector 30 comprising a plunger rod 31 movably mounted for slidable movement in the front wall 19' of the cabinet 19 and normally held in its outer position by means of a spring 32.

Mounted upon the wall 19', as at 33, is a bracket 34 on which is mounted an electro-magnetic coil 35 having the usual magnetic core 36 and spring-controlled vibratory arm 37. The outer end portion of this arm 37 provides a latch head 38 which normally has latched engagement with the arm 22 to restrain operation of the arm 22 by the action of a spring 39.

The coin chute structure includes a shelf 40, and on this shelf 40 is pivotally mounted, as at 41, an actuating arm 42. On this arm is a pin 43 which projects into the coin chute structure 12 in the path of the token, whereby a token of

proper size and denomination movable with the slide of the coin chute structure will force this pin **43** outwardly, and consequently move the actuating arm **42** in a direction to close the contacts **46** of a structure **44** controlling the circuit to the electro-magnetic coil **35**.

Briefly, the operation is as follows: The slide of the coin slide structure **12** is moved inwardly to slide the bar **16** to move the panel **11** in a position to permit discharge of spent balls from the playboard **10**. During this movement of the bar **16**, the arm **22** is pivoted by the action of the spring **39** to dispose the seat **23** from obstructing position with respect to the discharge opening **24**. This movement of the arm **22** by the action of the spring **39** is permitted by the release of the latch head **38** therefrom by action of the magnetic coil **35**, the circuit of which has been closed by the action of the pin **43** engaging the token carried by the slide of the coin slide structure **12**. This pivotal movement of the arm **22** permits one unit of merchandise **26'** to pass through the discharge opening **24** to be ejected by the ejector **30** into the chute **28** into position to be removed therefrom, the remaining merchandise **26** being obstructed by the seat **47**.

A token not of the proper denomination or size will not actuate the pin **43**, and consequently the latch head **38** will not be moved from latched position with respect to the arm **22**, thereby preventing the vending of the merchandise.

While I have illustrated and described the preferred form of construction for carrying my invention into effect, this is capable of variation and modification without departing from the spirit of the invention. I, therefore, do not wish to be limited to the precise details of construction set forth, but desire to avail myself of such variations and modifications as come within the scope of the appended claims.

Having thus described my invention, what I claim as new and desire to protect by Letters Patent is:

1. Merchandise dispensing mechanism for use with vending machines of the type including a coin controlled instrumentality, and a coin-freed control therefor, said mechanism comprising a trough having an open bottom portion and adapted for gravity feed of articles of merchandise toward the open bottom part thereof, a yieldable stop member positioned adjacent the open bottom part of the trough, a manually reciprocable ejecting mechanism positioned below said open bottom of the trough and including a reciprocable slide member movable in a direction toward and away from said yieldable stop member and having spring means normally positioning an end of the same away from said stop to permit gravitating movement of an article between said end and said stop, a pivoted feed arm having an angled end portion normally positioned below the open bottom of said trough to prevent movement of articles of merchandise therethrough and toward said ejecting mechanism, yieldable means normally urging said pivoted arm in a direction to move said angled end portion away from the said open bottom of said trough to release merchandise therefrom for positioning between the extremity of said reciprocable ejecting member and said yieldable stop member for ejecting movement past the latter by manual operation of the former, together with automatic latch means releasable by operation of said coin-freed control to release said pivoted feed arm for feeding movement under the urgence of said yieldable means said feed arm having a second angled portion spaced and offset from said first mentioned angled portion and movable into position to block movement of articles toward said first mentioned portion when the latter is moved out of movement-preventing position as aforesaid, and means actuated by the aforesaid instrumentality for moving said pivoted feed arm into latched position.

2. Dispensing mechanism for use with coin-freed devices and comprising a gravity merchandise feed having an exit opening, yieldable stop means positioned adjacent said opening, a reciprocable ejector positioned below said opening and having an end portion adapted for engagement with an article of merchandise to move the latter past said yieldable stop member to release such merchandise, merchandise feed means including a pivoted feed arm having a pair of spaced offset end portions alternately positionable by pivotation of said arm to block the movement of merchandise in the direction of said exit opening, one of the said offset end portions being adapted to close said exit opening when the said arm is in one position and to be moved away from said exit opening and permit merchandise to pass therethrough when said arm is in a second position, means normally urging said arm with the last mentioned said offset portion thereof in position to open said exit opening, together with releasable latch means for holding said arm in position with the said last mentioned offset portion thereof closing said exit opening, the said latch means being operable automatically by said coin control device to release said arm for movement by said urging means to move the offset end portion thereof away from said exit opening and permit an article of merchandise to move by gravity toward said ejecting means for manual movement by the latter past said yieldable stop member.

3. Dispensing mechanism including a reciprocable coin-freed control, a merchandise supporting trough having a discharge opening, an oscillatable feed arm provided with spaced offset members adapted for movement relative to said trough to obstruct passage of merchandise articles through said opening and movable to a position to permit discharge of merchandise articles one at a time through said opening, means including a yieldable stop member positioned adjacent and below said discharge opening, and means including a reciprocable ejector below said discharge opening and having an end portion positioned oppositely to said stop member and movable toward and away from the latter by reciprocation of said ejecting member, the said stop member being effective to arrest movement of merchandise passing through said discharge opening and the said end portion of the ejector being movable with the latter toward said stop member to urge an article of merchandise past the same, spring means normally urging said feed arm into article discharging position, automatic latch means normally latching said feed arm out of article discharging position, said latch means being released by operation of said coin-freed control when the same is moved in one direction, said control being operable when moved in an opposite direction to restore said feed arm to latched position as aforesaid.

4. Dispensing mechanism including a discharge chute having an entrance and an exit opening, guide means for directing the gravitating movement of articles toward said entrance

opening, resilient stopping means positioned to block the movement of articles into said entrance opening, ejecting means including a manually operable member movable toward and away from said stop means to push an article past the latter, article feed means including a pivoted feed arm cooperable with said guide means to feed articles one at a time for each complete oscillation of said feed arm for gravitating movement into position between said ejecting means and said stopping means, spring means normally urging said feed arm into article feeding position to feed an article toward said ejecting and stopping means as aforesaid, automatic latch means holding said feed arm in non-feeding position, a feed arm actuating bar arranged for reciprocable movement into and out of engagement with said feed arm to move the latter against the action of said spring into latched position, and mechanism including a reciprocably movable control operable when moved in one direction to move said feed arm actuating bar out of operative engagement with said feed arm and further operable to effect the release of said latch means, together with spring means normally urging said feed arm operating bar into operative engagement with said feed arm in a direction to move the latter into latched position.

5. Mechanism for dispensing articles of merchandise comprising a conduit through which the articles are adapted to gravitate in succession and provided with a discharge opening, a discharge chute communicating with said opening, an oscillatable feed arm provided with a pair of cooperating offset members movable by said arm for effecting the discharge of said articles one at a time through said opening, means comprising a yieldable member for arresting each of said articles after passage of the same through said opening and restraining movement of the same into said chute, token or coin releasable means for effecting the operation of said feed arm, and a manually operable reciprocable member for shifting an article against the action of said yieldable member into said chute.

HARRY E. WILLIAMS.